TEK INSTRUCTION MANUAL

Part No. 070-5880-00
Product Group No. 42

7934 OSCILLOSCOPE

WARNING

The following service instructions are for use by qualified personnel only. To avoid personal injury, do not perform any service other than that contained in operating instructions unless you are qualified to do so. Refer to Operators Safety Summary and Service Summary prior to performing any service.

Please Check for CHANGE INFORMATION at the Rear of This Manual

First Printing May 1986

Tektronix®
COMMITTED TO EXCELLENCE

http://manoman.sqhill.com

Copyright © 1986 Tektronix, Inc. All rights reserved. Contents of this publication may not be reproduced in any form without the written permission of Tektronix, Inc.

Products of Tektronix, Inc. and its subsidiaries are covered by U.S. and foreign patents and/or pending patents.

TEKTRONIX, TEK, SCOPE-MOBILE, and are registered trademarks of Tektronix, Inc.

Printed in U.S.A. Specification and price change privileges are reserved.

Tektronix, Inc.
P.O. Box 500
Beaverton, Oregon 97077

http://manoman.sqhill.com

TABLE OF CONTENTS

	Page
LIST OF ILLUSTRATIONS	iii
LIST OF TABLES	iii
OPERATORS SAFETY SUMMARY	iv
7934 FEATURES	vi
Section 1 GENERAL INFORMATION	
INTRODUCTION	1-1
OPERATOR'S MANUAL	1-1
INSTRUCTION MANUAL	1-1
INSTALLATION	1-1
INITIAL INSPECTION	1-1
OPERATING POWER INFORMATION	1-2
POWER CORD INFORMATION	1-2
OPERATING VOLTAGE	1-2
OPERATING TEMPERATURE	1-2
OPERATING POSITION	1-2
PACKAGING FOR SHIPMENT	1-2
SPECIFICATION	1-4
ELECTRICAL CHARACTERISTICS	1-4
ENVIRONMENTAL	1-11
PHYSICAL	1-12
SYSTEM ELECTRICAL SPECIFICATION	1-13
PLUG-IN INCOMPATIBILITIES	1-14
7934 OSCILLOSCOPE VERTICAL SYSTEM SPECIFICATION	1-16
7934 OSCILLOSCOPE HORIZONTAL SYSTEM SPECIFICATION	1-17
SPECIAL PURPOSE PLUG-IN UNITS	1-18
STANDARD ACCESSORIES	1-19
RECOMMENDED ACCESSORIES	1-19
Section 2 OPERATING INSTRUCTIONS	
PLUG-IN UNITS	2-1
INSTALLATION OF PLUG-IN UNITS	2-1
CONTROLS AND CONNECTORS	2-1
FRONT-PANEL COLOR CODING	2-1
OPERATOR'S CHECKOUT PROCEDURE	2-1
TEST EQUIPMENT REQUIRED	2-1
PRELIMINARY SET UP	2-6
DISPLAY FOCUS	2-7
TRACE ALIGNMENT	2-7
GRATICULE ILLUMINATION	2-7
CONTROL ILLUMINATION	2-7
VERTICAL DEFLECTION SYSTEM	2-7
HORIZONTAL DEFLECTION SYSTEM	2-7
Section 2 OPERATING INSTRUCTIONS (cont)	
TRIGGERING	2-8
READOUT	2-8
BEAMFINDER	2-9
CALIBRATOR	2-9
Z-AXIS INPUT	2-9
STORAGE OPERATION	2-9
DETAILED OPERATING INFORMATION	2-11
GRATICULE	2-11
LIGHT FILTER	2-11
CONTROL ILLUMINATION	2-11
INTENSITY CONTROLS	2-11
DISPLAY FOCUS	2-12
ASTIGMATISM AND FOCUS ADJUSTMENTS	2-12
BEAMFINDER	2-12
TRACE ALIGNMENT	2-12
READOUT DISPLAY	2-12
READOUT IDENTIFY	2-13
READOUT INTENSITY	2-13
READOUT MODES	2-13
READOUT OPERATION WITH STORAGE	2-13
NORMAL READOUT MODE	2-13
BISTABLE AND VAR PERSIST	2-14
FAST BISTABLE AND FAST VAR PERSIST	2-14
PULSED READOUT MODE	2-14
BISTABLE	2-14
VAR PERSIST	2-14
FAST BISTABLE	2-14
FAST VAR PERSIST	2-14
READOUT WITH SAVE STORAGE MODE	2-14
SAVE WITH NORMAL READOUT	2-14
SAVE WITH PULSED READOUT	2-14
REDUCED SCAN MODE	2-14
STORAGE DISPLAY	2-14
BISTABLE STORAGE	2-14
VARIABLE PERSISTENCE STORAGE	2-14
FAST STORAGE	2-15
ERASE	2-15
SAVE MODE	2-15
CARE OF STORAGE SCREEN	2-16

http://manoman.sqhill.com

TABLE OF CONTENTS (cont)

Page

Section 2 OPERATING INSTRUCTIONS (cont)

VERTICAL AND HORIZONTAL MODE COMBINATIONS 2-16
VERTICAL MODES 2-16
LEFT OR RIGHT 2-16
ALTERNATE MODE 2-16
CHOPPED MODE 2-17
ALGEBRAIC ADDITION 2-17
HORIZONTAL MODES 2-18
A OR B 2-18
ALTERNATE MODE 2-18
CHOPPED MODE 2-18
HORIZONTAL SELECTION 2-18
VERTICAL TRACE SEPARATION 2-18
TRIGGER SOURCE 2-18
CALIBRATOR OUTPUT 2-19
VOLTAGE 2-19
CURRENT 2-19
REPETITION RATE 2-19
WAVE SHAPE 2-19
SIGNAL OUTPUTS 2-19
+ SAWTOOTH OUT 2-19
+ GATE OUT 2-19
VERTICAL SIGNAL 2-19
PROBE POWER 2-20
DISPLAY PHOTOGRAPHY 2-20
INTENSITY MODULATION 2-20
REMOTE INPUT SIGNALS 2-20
REMOTE RESET INPUT 2-21
REMOTE ERASE INPUT 2-21
REMOTE SAVE INPUT 2-21
REMOTE STORAGE GATE INPUT 2-21
APPLICATIONS 2-21
VERTICAL AMPLIFIER PLUG-IN UNITS 2-21
SINGLE-TRACE 2-21
DUAL-TRACE 2-21
THREE-TRACE 2-21
FOUR-TRACE 2-21
TIME-BASE PLUG-IN UNITS 2-21
SAMPLING DISPLAYS 2-22
SINGLE-TRACE SAMPLING 2-22
DUAL-TRACE SAMPLING 2-22
X-Y SAMPLING 2-22
SPECIAL PURPOSE PLUG-IN UNITS 2-22

Page

Section 2 OPERATING INSTRUCTIONS (cont)

DIGITAL COUNTERS AND MULTIMETER PLUG-IN UNITS 2-22
READOUT ACCESS PLUG-IN UNIT 2-22
TRANSISTOR CURVE-TRACER PLUG-IN UNIT 2-22
SPECTRUM ANALYZER PLUG-IN UNITS 2-23
X-Y OPERATION 2-23
RASTER DISPLAYS 2-23

Section 3 INSTRUMENT OPTIONS

OPTION 02 3-1
OPTION 03 3-1

WARNING

THE REMAINING PORTIONS OF THIS TABLE OF CONTENTS LISTS THE SERVICING INSTRUCTIONS. THESE SERVICING INSTRUCTIONS ARE FOR USE BY QUALIFIED SERVICE PERSONNEL ONLY. TO AVOID ELECTRIC SHOCK OR OTHER PERSONAL INJURY, DO NOT PERFORM ANY SERVICING OTHER THAN THAT DESCRIBED IN THE OPERATOR'S INSTRUCTIONS UNLESS YOU ARE QUALIFIED TO DO SO.

Section 4 THEORY OF OPERATION

BLOCK DIAGRAM DESCRIPTION 4-1
DETAILED CIRCUIT OPERATION 4-4
LOGIC FUNDAMENTALS 4-4
SYMBOLS 4-4
LOGIC POLARITY 4-4
INPUT/OUTPUT TABLES 4-4
NON-DIGITAL DEVICES 4-4
CABLING—DIAGRAM 1 4-4
CALIBRATOR AND MODE SWITCH—DIAGRAM 2 4-4
CALIBRATOR 4-9

http://manoman.sqhill.com

TABLE OF CONTENTS (cont)

Page

Section 4 THEORY OF OPERATION (cont)

PLUG-IN SINGLE SWEEP LOGIC . . . 4-9
STORAGE SWEEP GATE LOGIC . . . 4-9
TRIGGER CONTROL LOGIC 4-10
MAIN INTERFACE—DIAGRAM 3. 4-10
LOGIC—DIAGRAM 4 4-10
HORIZONTAL LOGIC 4-10
A SWEEP LOCKOUT STAGE 4-10
B SWEEP LOCKOUT STAGE 4-10
ALTERNATE PULSE STAGE 4-12
Z-AXIS LOGIC 4-16
HORIZONTAL BINARY. 4-18
VERTICAL BINARY 4-18
PLUG-IN BINARY 4-21
CLOCK GENERATOR. 4-22
VERTICAL CHOPPED BLANKING. . . 4-24
CHOP COUNTER 4-24
VERTICAL MODE LOGIC. 4-26
TRACE SEPARATION. 4-28
TRIGGER SELECTOR — DIAGRAM 5 . 4-29
TRIGGER SIGNALS 4-29
B TRIGGER CHANNEL SWITCH. . . . 4-29
B TRIGGER OUTPUT AMPLIFIER . . 4-31
VERTICAL SIGNAL OUT AMPLIFIER 4-31
VERTICAL INTERFACE — DIAGRAM 7 4-31
VERTICAL CHANNEL SELECTOR. 4-31
RIGHT AND LEFT CHANNEL FEEDBESIDE 4-31
VERTICAL CHANNEL SWITCH. 4-32
VERTICAL AMPLIFIER — DIAGRAM 8 4-33
DELAY-LINE 4-33
DELAY-LINE COMPENSATION 4-33
FEEDBESIDE 4-33
OUTPUT AMPLIFIER 4-34
OUTPUT PROTECTION 4-34
AUXILIARY AMPLIFIER 4-34
HORIZONTAL INTERFACE — DIAGRAM 9. 4-34
HORIZONTAL CHANNEL SWITCH . . 4-35
B HORIZONTAL X-Y DELAY COMPENSATION 4-35
HORIZONTAL AMPLIFIER — DIAGRAM 10. 4-36
INPUT AMPLIFIER 4-36
BEAMFINDER NETWORK 4-37
AUXILIARY AMPLIFIER 4-37
LEFT AND RIGHT DRIVER AMPLIFIER 4-37
LEFT AND RIGHT OUTPUT AMPLIFIER 4-37
OUTPUT SIGNALS — DIAGRAM 11. . . 4-37
SAWTOOTH OUT AMPLIFIER. 4-37
GATE OUT AMPLIFIER 4-37
PROBE POWER 4-38
READOUT SYSTEM — DIAGRAM 6. . . 4-38
DISPLAY FORMAT 4-40
DEVELOPING THE DISPLAY. 4-40
TIMER. 4-44
TIME-SLOT COUNTER 4-45
WORD TRIGGER 4-46
CHANNEL COUNTER. 4-46
READOUT GATE 4-46
ENCODING THE DATA. 4-47
COLUMN AND ROW DATA SWITCHES 4-49
DISPLAY-SKIP GENERATOR. 4-50
COLUMN AND ROW DECODERS. . . 4-50
JUMP DETECTOR 4-50
ZEROS LOGIC AND MEMORY 4-50
CHARACTER GENERATOR. 4-52
HORIZONTAL POSITION COUNTER 4-54
DECIMAL POSITION LOGIC 4-54
VECTOR GENERATORS 4-54
OUTPUT AMPLIFIERS. 4-55
DISPLAY SEQUENCE 4-55
CONVERTER/RECTIFIERS — DIAGRAM 12. 4-55
LINE INPUT. 4-55
INVERTER START 4-58
INVERTER 4-58
OVER-VOLTAGE STOP 4-58
INVERTER CONTROL 4-58
LOW-VOLTAGE RECTIFIERS 4-60
LOW-VOLTAGE REGULATOR — DIAGRAM 13 4-61
OPERATING SUPPLIES. 4-61
+50 V REGULATOR 4-61
−15 V REGULATOR 4-61
+5 V REGULATOR 4-61
+15 V REGULATOR 4-63
−50 V REGULATOR 4-63
GRATICULE LIGHT SUPPLY 4-63

http://manoman.sqhill.com

TABLE OF CONTENTS (cont)

Page

Section 4 THEORY OF OPERATION (cont)

Z AXIS AND CRT — DIAGRAM 14 4-63
HIGH-VOLTAGE POWER TRANSFORMER 4-63
ANODE VOLTAGE MULTIPLIER 4-63
CRT CATHODE SUPPLY 4-63
CATHODE-SUPPLY REGULATOR ... 4-65
Z-AXIS AMPLIFIER 4-65
CONTROL GRID DC RESTORER ... 4-65
FOCUS SUPPLY 4-65
CRT CONTROL CIRCUITS 4-65
AUTO FOCUS AMPLIFIER — DIAGRAM 15 4-66
DATA SWITCH 4-67
CURRENT TO VOLTAGE AMPLIFIER 4-67
NON-LINEAR AMPLIFIER 4-67
OUTPUT AMPLIFIER 4-67
EMITTER FOLLOWER 4-67
STORAGE CONTROL AND TRACE ALIGN — DIAGRAM 16 4-67
STORAGE DISPLAY — DIAGRAM 17 .. 4-67
STORAGE MODE SWITCHING 4-67
ERASE 4-74
TRANSFER AND MULTI 4-74
SAVE MODE SWITCHING 4-75
MAIN TIMING 4-75
CLOCK 4-76
PERSISTENCE PULSE GENERATOR 4-76
SAVE INTENSITY PULSE GENERATOR 4-76
PREP 4-76
FAST PREP 4-76
STORAGE LOCKOUT 4-77
READOUT CONTROL LOGIC 4-77
TRACE ALIGNMENT 4-77
FLOOD GUN CATHODE DRIVER ... 4-77
COLLIMATION ELECTRODE #1 AND FLOOD GUN ANODE DRIVER 4-78
COLLIMATION ELECTRODE 2, 3, AND 4 4-78
COLLECTOR MESH DRIVER 4-78
COLLECTOR AND COLLIMATION ELECTRODE DECODER 4-78
FAST MESH DRIVER 4-78
FAST MESH DECODER 4-78
STORAGE MESH DRIVER 4-78
STORAGE MESH DECODER 4-79

Page

Section 5 MAINTENANCE

PREVENTIVE MAINTENANCE 5-1
CABINET PANEL REMOVAL 5-1
CLEANING 5-1
VISUAL INSPECTION 5-2
SEMICONDUCTOR CHECKS 5-2
PERIODIC ELECTRICAL ADJUSTMENTS 5-2
TROUBLESHOOTING 5-2
TROUBLESHOOTING AIDS 5-2
TROUBLESHOOTING EQUIPMENT . 5-6
TROUBLESHOOTING TECHNIQUES 5-7
TROUBLESHOOTING THE HIGH-EFFICIENCY POWER-SUPPLY UNIT ... 5-8
GENERAL 5-8
PRELIMINARY POWER-SUPPLY CHECK PROCEDURE 5-9
POWER-SUPPLY TROUBLESHOOTING PROCEDURE 5-9
CORRECTIVE MAINTENANCE 5-14
OBTAINING REPLACEMENT PARTS 5-14
SOLDERING TECHNIQUES 5-14
COMPONENT REMOVAL AND REPLACEMENT 5-15
DISPLAY UNIT KICKSTAND 5-15
POWER-SUPPLY UNIT REMOVAL .. 5-15
ACCESS TO COMPONENTS IN THE POWER-SUPPLY UNIT 5-16
CATHODE-RAY TUBE REMOVAL ... 5-17
CATHODE-RAY TUBE REPLACEMENT 5-18
CIRCUIT BOARD REPLACEMENT .. 5-19
PLUG-IN INTERFACE CONNECTORS 5-26
DELAY LINE REPAIR 5-26
SEMICONDUCTORS 5-26
HYPCON CONNECTORS 5-27
INTERCONNECTING PINS 5-30
PUSHBUTTON SWITCHES 5-31
GRATICULE LIGHT BULBS 5-33
POWER TRANSFORMER 5-33
LINE FUSE 5-33
ADJUSTMENT AFTER REPAIR 5-33

http://manoman.sqhill.com

TABLE OF CONTENTS (cont)

Page

Section 6 CHECKS AND ADJUSTMENTS

PRELIMINARY INFORMATION..... 6-1
ADJUSTMENT INTERVAL..... 6-1
TEKTRONIX FIELD SERVICE..... 6-1
USING THIS PROCEDURE..... 6-1
TEST EQUIPMENT REQUIRED..... 6-1
SPECIAL FIXTURES..... 6-1
TEST EQUIPMENT ALTERNATIVES. 6-2
SIGNAL CONNECTIONS..... 6-2
PERFORMANCE CHECK/ADJUSTMENT PROCEDURE..... 6-5
INTRODUCTION..... 6-5
INDEX TO CHECKS AND ADJUSTMENTS PROCEDURE..... 6-5
SETUP PROCEDURE..... 6-6
A. POWER SUPPLY..... 6-7
B. Z-AXIS AND DISPLAY..... 6-9
C. CALIBRATOR AND OUTPUT SIGNALS..... 6-13
D. TRIGGER SYSTEM..... 6-16
E. HORIZONTAL SYSTEM..... 6-20
F. VERTICAL SYSTEM..... 6-23
G. READOUT SYSTEM..... 6-29
H. STORAGE SYSTEM..... 6-31

Section 7 REPLACEABLE ELECTRICAL PARTS

Page

Section 8 DIAGRAMS AND CIRCUIT BOARD ILLUSTRATIONS

DIAGRAMS AND CIRCUIT BOARD ILLUSTRATIONS..... 8-1
CABLING 1..... 8-1
CALIBRATOR AND MODE SWITCH... 8-2
MAIN INTERFACE..... 8-3
LOGIC..... 8-4
TRIGGER SELECTOR..... 8-5
READOUT..... 8-6
VERTICAL INTERFACE..... 8-7
VERTICAL AMPLIFIER..... 8-8
HORIZONTAL INTERFACE..... 8-8
HORIZONTAL AMPLIFIER..... 8-10
SIGNAL OUTPUT..... 8-11
CONVERTER/RECTIFIERS..... 8-12
LV REGULATOR..... 8-13
Z AXIS AND CRT..... 8-14
AUTO FOCUS..... 8-15
STORAGE CONTROL/TRACE ALIGN.. 8-16
STORAGE DISPLAY..... 8-17
FRONT PANEL CONTROL..... 8-18

Section 9 REPLACEABLE MECHANICAL PARTS

CHANGE INFORMATION

http://manoman.sqhill.com

LIST OF ILLUSTRATIONS

Fig. No.		Page
	FRONTISPIECE. 7934 FEATURES	vi
1-1.	7934 DIMENSIONAL DRAWING	1-12
2-1.	FRONT-PANEL CONTROLS, CONNECTORS, AND INDICATORS	2-2
2-2.	REAR-PANEL CONTROLS AND CONNECTORS	2-4
2-3.	DEFINITION OF GRATICULE MEASUREMENT LINES	2-11
2-4.	LOCATION OF READOUT ON THE CRT IDENTIFYING THE ORIGINATING PLUG-IN AND CHANNEL	2-13
2-5.	LOCATION OF READOUT ON THE CRT WHEN REDUCED SCAN IS SELECTED	2-13
4-1.	BASIC BLOCK DIAGRAM OF THE 7934 STORAGE OSCILLOSCOPE	4-2
4-2.	DETAILED BLOCK DIAGRAM OF THE CALIBRATOR AND MODE SWITCH CIRCUIT.	4-8
4-3.	DETAILED BLOCK DIAGRAM OF THE LOGIC CIRCUIT	4-11
4-4.	BREAKDOWN OF SEPARATE STAGES WITHIN HORIZONTAL LOGIC IC (U4428) SHOWING INPUTS AND OUTPUTS FOR EACH STAGE	4-12
4-5.	(A) LOGIC DIAGRAM FOR A SWEEP LOCKOUT STAGE; (B) TABLE OF INPUT/OUTPUT COMBINATIONS	4-13
4-6.	(A) LOGIC DIAGRAM OF B SWEEP LOCK-STAGE; (B) TABLE OF INPUT/OUTPUT COMBINATIONS	4-14
4-7.	(A) LOGIC DIAGRAM FOR ALTERNATE PULSE GENERATOR STAGE; (B) TABLE OF INPUT/OUTPUT COMBINATIONS	4-15
4-8.	(A) LOGIC DIAGRAM FOR Z-AXIS LOGIC STAGE; (B) TABLE OF INPUT/OUTPUT COMBINATIONS	4-17
4-9.	(A) LOGIC DIAGRAM FOR HORIZONTAL BINARY STAGE; (B) TABLE OF INPUT/OUTPUT COMBINATIONS	4-19
4-10.	(A) LOGIC DIAGRAM FOR VERTICAL BIINARY STAGE; (B) TABLE OF INPUT/OUTPUT COMBINATIONS	4-20
4-11.	(A) LOGIC DIAGRAM FOR PLUG-IN BINARY STAGE; (B) TABLE OF INPUT/OUTPUT COMBINATIONS	4-22
4-12.	(A) DIAGRAM OF CLOCK GENERATOR STAGE; (B) IDEALIZED WAVEFORMS FOR CLOCK GENERATOR STAGE	4-23
4-13.	(A) LOGIC DIAGRAM FOR VERTICAL CHOPPED BLANKING STAGE; (B) TABLE OF INPUT/OUTPUT COMBINATIONS	4-25
4-14.	IDEALIZED WAVEFORMS FOR VERTICAL CHOPPED BLANKING STAGE	4-26
4-15.	(A) LOGIC DIAGRAM OF CHOP COUNTER STAGE; (B) IDEALIZED WAVEFORMS FOR CHOP COUNTER STAGE	4-27
4-16.	LOGIC DIAGRAM OF VERTICAL MODE LOGIC STAGE	4-28
4-17.	(A) LOGIC DIAGRAM OF TRACE SEPARATION STAGE; (B) TABLE OF INPUT/OUTPUT COMBINATIONS	4-29
4-18.	DETAILED BLOCK DIAGRAM OF THE TRIGGER SELECTOR CIRCUIT	4-30
4-19.	DETAILED BLOCK DIAGRAM OF VERTICAL INTERFACE CIRCUIT	4-32
4-20.	DETAILED BLOCK DIAGRAM OF THE VERTICAL AMPLIFIER CIRCUIT	4-33
4-21.	DETAILED BLOCK DIAGRAM OF THE HORIZONTAL INTERFACE CIRCUIT	4-35
4-22.	DETAILED BLOCK DIAGRAM OF THE HORIZONTAL AMPLIFIER CIRCUIT	4-36
4-23.	DETAILED BLOCK DIAGRAM OF THE OUTPUT SIGNALS CIRCUIT	4-38
4-24.	LOCATION OF READOUT DISPLAY ON THE CRT IDENTIFYING THE ORIGINATING PLUG-IN AND CHANNEL	4-38
4-25.	CHARACTER SELECTION MATRIX FOR 7934 READOUT SYSTEM	4-39
4-26.	TYPICAL READOUT DISPLAY WHERE ONLY CHANNEL 2 OF THE RIGHT VERTICAL AND B HORIZONTAL UNITS IS DISPLAYED	4-40
4-27.	DETAILED BLOCK DIAGRAM OF THE READOUT SYSTEM	4-42
4-28.	OUTPUT WAVEFORMS OF THE TIMER STAGE	4-44
4-29.	DETAIL OF OUTPUT AT PINS 12, 13, AND 14 OF U3426	4-45
4-30.	TIMER STAGE OPERATION WHEN DISPLAY-SKIP CONDITION OCCURS	4-46
4-31.	TIME RELATIONSHIP OF THE TIME-SLOT (TS) PULSES PRODUCED BY U3459	4-47
4-32.	TYPICAL ENCODING SCHEME FOR VOLTAGE-SENSING PLUG-IN UNIT. CODING SHOWN FOR DEFLECTION FACTOR OF 100 MICROVOLTS	4-48
4-33.	IDEALIZED CURRENT WAVEFORMS OF; (A) ROW ANALOG DATA AND (B) COLUMN ANALOG DATA	4-49
4-34.	TYPICAL OUTPUT WAVEFORMS FOR ZEROS LOGIC AND MEMORY STAGE OPERATION (AT PIN 7 OF U3532)	4-51
4-35.	DEVELOPING A TYPICAL CHARACTER ON THE CRT	4-53

http://manoman.sqhill.com

LIST OF ILLUSTRATIONS (cont)

Fig. No.		Page
4-36.	READOUT WORD RELATING 10 POSSIBLE CHARACTER LOCATIONS TO THE DECIMAL POINT INSTRUCTIONS THAT CAN BE ENCODED, AND THE RESULTANT CRT DISPLAY	4-55
4-37.	FLOW CHART FOR CHARACTER GENERATION BY THE READOUT SYSTEM	4-56
4-38.	DETAILED BLOCK DIAGRAM OF THE CONVERTER/RECTIFIERS CIRCUIT	4-57
4-39.	(A) REPRESENTATION OF INVERTER STAGE. IDEALIZED WAVEFORMS OF (B) TOTAL INVERTER CURRENT, I_T, (C) VOLTAGE ACROSS CR41, AND (D) VOLTAGE ACROSS PRIMARIES OF T110 AND T35.	4-59
4-40.	DETAILED BLOCK DIAGRAM OF THE LOW-VOLTAGE REGULATOR CIRCUIT	4-62
4-41.	DETAILED BLOCK DIAGRAM OF THE Z-AXIS AND CRT CIRCUIT	4-64
4-42.	(A) DETAILED BLOCK DIAGRAM OF THE AUTO FOCUS AMPLIFIER CIRCUIT, (B) LOGIC TABLE FOR INTENSITY CONTROLS	4-66
4-43.	DETAILED BLOCK DIAGRAM OF THE 7934 STORAGE SYSTEM	4-68
4-44.	BISTABLE STORAGE MODE TIMING DIAGRAM	4-70
4-45.	VARIABLE PERSISTENCE STORAGE MODE TIMING DIAGRAM	4-71
4-46.	FAST BISTABLE STORAGE MODE TIMING DIAGRAM	4-72
4-47.	FAST VARIABLE PERSISTENCE MODE TIMING DIAGRAM	4-73
5-1.	COLOR CODE FOR RESISTORS AND CAPACITORS	5-4
5-2.	SEMICONDUCTOR LEAD CONFIGURATIONS	5-4
5-3.	ORIENTATION OF MULTI-PIN CONNECTOR HOLDERS	5-6
5-4.	CURRENT SENSING WAVEFORM AT R84 SHOWING: (A) POWER SUPPLIES NOT IN CURRENT LIMIT OPERATION. (B) POWER SUPPLIES IN CURRENT LIMIT OPERATION	5-11
5-5.	TYPICAL WAVEFORMS ON C16 AND C17 WITH THE LINE VOLTAGE SET TO ABOUT 20 V	5-12
5-6.	CURRENT WAVEFORM AT T30 SHOWING BURST OPERATION AT LINE VOLTAGE OF ABOUT 60 V	5-13
5-7.	CURRENT WAVEFORM AT T30 FOR NORMAL INVERTER OPERATION AT LINE VOLTAGE OF 115 V	5-13
5-8.	WAVEFORM AT TP34 ON THE POWER-SUPPLY INVERTER BOARD WITH THE LINE VOLTAGE AT ABOUT 20 V	5-13
5-9.	USE OF KICKSTAND TO GAIN ACCESS TO INTERIOR OF THE 7934	5-16
5-10.	POWER-SUPPLY UNIT SECURING SCREWS	5-17
5-11.	LOCATION OF LINE STORAGE CAPACITOR SCREWS USED TO MANUALLY DISCHARGE C16 AND C17	5-17
5-12.	LOCATION OF SECURING SCREWS FOR THE MAIN INTERFACE BOARD	5-20
5-13.	CORRECT PLACEMENT OF POWER TRANSISTOR AND MOUNTING HARDWARE ON REAR HEATSINK	5-25
5-14.	HYPCON ASSEMBLY REMOVAL AND REPLACEMENT	5-28
5-15.	COAXIAL AND END-LEAD CONNECTOR ASSEMBLY	5-31
5-16.	EXPLODED VIEW OF CIRCUIT-BOARD PIN AND FERRULE	5-31
5-17.	REMOVAL PROCEDURE FOR PUSH-BUTTON SWITCHES	5-32
6-1.	TYPICAL DISPLAY WHEN CHECKING X-Y COMPENSATION	6-21
6-2.	TYPICAL DISPLAY WHEN ADJUSTING CHARACTER CLOCK	6-30

NOTE: ILLUSTRATIONS IN SECTION 8 ARE LOCATED ON THE BACK OF THE ASSOCIATED DIAGRAM.

8-1.	LOCATION OF CIRCUIT BOARDS IN THE 7934 ACQUISITION UNIT.
8-2.	LOCATION OF CIRCUIT BOARDS IN THE 7934 DISPLAY UNIT.
8-3.	A2 — MODE SWITCH CIRCUIT BOARD ASSEMBLY.
8-4.	A3 — PARTIAL MAIN INTERFACE CIRCUIT BOARD ASSEMBLY.
8-5.	A6 — LOGIC CIRCUIT BOARD ASSEMBLY.
8-6.	A7 — TRIGGER SELECTOR CIRCUIT BOARD ASSEMBLY.
8-7.	A13 — READOUT CIRCUIT BOARD ASSEMBLY.
8-8.	A3 — PARTIAL MAIN INTERFACE CIRCUIT BOARD ASSEMBLY.
8-9.	A8 — VERTICAL INTERFACE CIRCUIT BOARD ASSEMBLY.
8-10.	A19 — VERTICAL AMPLIFIER CIRCUIT BOARD ASSEMBLY.

http://manoman.sqhill.com

LIST OF ILLUSTRATIONS (cont)

Fig. No. Page

8-11. A9 — X-Y COMPENSATION CIRCUIT BOARD ASSEMBLY.
8-12. A10 — HORIZONTAL INTERCONNECT CIRCUIT BOARD ASSEMBLY.
8-13. A11 — HORIZONTAL INTERFACE CIRCUIT BOARD ASSEMBLY.
8-14. A20 — HORIZONTAL AMPLIFIER CIRCUIT BOARD ASSEMBLY.
8-15. A12 — SIGNAL OUTPUT CIRCUIT BOARD ASSEMBLY.
8-16. A14A1 — CONTROL RECTIFIER CIRCUIT BOARD ASSEMBLY.
8-17. A14A2 — PARTIAL LV REGULATOR CIRCUIT BOARD ASSEMBLY.
8-18. A14A3 — INVERTER CIRCUIT BOARD ASSEMBLY.
8-19. A14A2 — PARTIAL LV REGULATOR CIRCUIT BOARD ASSEMBLY.
8-20. A21 — PARTIAL Z AXIS CIRCUIT BOARD ASSEMBLY.
8-21. A22 — HIGH VOLTAGE CIRCUIT BOARD ASSEMBLY (FRONT).
8-22. A22 — HIGH VOLTAGE CIRCUIT BOARD ASSEMBLY (REAR).
8-23. A23 — FOCUS CIRCUIT BOARD ASSEMBLY.
8-24. A21 — PARTIAL Z AXIS CIRCUIT BOARD ASSEMBLY.
8-25. A27 — PARTIAL INTENSITY CONTROL CIRCUIT BOARD ASSEMBLY.
8-26. A25 — PARTIAL STORAGE CIRCUIT BOARD ASSEMBLY.
8-27. A24 — STORAGE MODE SWITCH CIRCUIT BOARD ASSEMBLY.
8-28. A26 — PARTIAL STORAGE CONTROL CIRCUIT BOARD ASSEMBLY.
8-29. A25 — PARTIAL STORAGE CIRCUIT BOARD ASSEMBLY.
8-30. A17 — PARTIAL INTENSITY CONTROL CIRCUIT BOARD ASSEMBLY.
8-31. A26 — PARTIAL STORAGE CONTROL CIRCUIT BOARD ASSEMBLY.

POWER SUPPLY ADJUSTMENTS PULL OUT

8-32. POWER SUPPLY TEST POINTS AND ADJUSTMENTS ON A14A1 — CONTROL RECTIFIER CIRCUIT BOARD.

8-33. POWER SUPPLY TEST POINTS AND ADJUSTMENTS ON A14A2 — LV REGULATOR CIRCUIT BOARD.

Fig. No. Page

Z-AXIS/DISPLAY ADJUSTMENTS PULL OUT

8-34. Z-AXIS TEST POINTS AND ADJUSTMENTS ON A21 — Z-AXIS CIRCUIT BOARD.
8-35. Z-AXIS ADJUSTMENT ON A6 — LOGIC CIRCUIT BOARD (PARTIAL).
8-36. CRT TEST POINTS AND ADJUSTMENTS ON A23 — FOCUS CIRCUIT BOARD.
8-37. CRT ADJUSTMENTS ON A24 — STORAGE MODE SWITCH CIRCUIT BOARD.
8-38. GEOMETRY AND HORIZONTAL GAIN ADJUSTMENTS ON A14 — HORIZONTAL AMPLIFIER CIRCUIT BOARD.

CALIBRATOR/OUTPUT SIGNALS ADJUSTMENTS PULL OUT

8-39. CALIBRATOR ADJUSTMENTS ON A2 — MODE SWITCH CIRCUIT BOARD.
8-40. SIGNAL OUT SELECTOR JUMPERS ON A12 — SIGNAL OUTPUT CIRCUIT BOARD.

TRIGGER ADJUSTMENTS PULL OUT

8-41. TRIGGER ADJUSTMENTS AND TEST POINTS ON A7 — TRIGGER SELECTOR CIRCUIT BOARD.
8-42. HORIZONTAL ADJUSTMENTS AND TEST POINTS ON A20 — HORIZONTAL AMPLIFIER CIRCUIT BOARD.

HORIZONTAL ADJUSTMENTS PULL OUT

8-43. REDUCED SCAN HORIZONTAL GAIN ADJUSTMENT ON A21 — Z-AXIS CIRCUIT BOARD.
8-44. X-Y COMPENSATION ADJUSTMENT ON A9 — X-Y COMPENSATION CIRCUIT BOARD.

VERTICAL ADJUSTMENTS PULL OUT

8-45. VERTICAL ADJUSTMENTS ON A19 — VERTICAL AMPLIFIER CIRCUIT BOARD.
8-46. VERTICAL INTERFACE ADJUSTMENTS ON A8 — VERTICAL INTERFACE CIRCUIT BOARD.
8-47. REDUCED SCAN VERTICAL ADJUSTMENTS ON A23 — FOCUS CIRCUIT BOARD.

READOUT ADJUSTMENTS PULL OUT

8-48. READOUT ADJUSTMENTS ON A13 — READOUT CIRCUIT BOARD.
8-49. READOUT ADJUSTMENTS ON A19 — VERTICAL AMPLIFIER CIRCUIT BOARD.

http://manoman.sqhill.com

LIST OF ILLUSTRATIONS (cont)

Fig. No.		Page
8-50.	READOUT ADJUSTMENTS ON A20 — HORIZONTAL AMPLIFIER CIRCUIT BOARD.	
STORAGE ADJUSTMENTS PULL OUT		
8-51.	STORAGE ADJUSTMENTS AND TEST POINTS ON A25 — STORAGE CIRCUIT BOARD.	
TROUBLESHOOTING CHART PULL OUT		
8-52.	7934 TROUBLESHOOTING CHART.	

http://manoman.sqhill.com

http://manoman.sqhill.com

LIST OF TABLES

Table No.		Page
1-1.	POWER-CORD CONDUCTOR IDENTIFICATION	1-2
1-2.	POWER-CORD AND PLUG IDENTIFICATION	1-3
1-3.	SHIPPING CARTON TEST STRENGTH	1-3
1-4.	ELECTRICAL CHARACTERISTICS	1-4
1-5.	ENVIRONMENTAL	1-11
1-6.	PHYSICAL	1-12
1-7.	PLUG-IN INCOMPATIBILITIES	1-14
1-8.	7934 OSCILLOSCOPE VERTICAL SYSTEM SPECIFICATION	1-16
1-9.	7934 OSCILLOSCOPE HORIZONTAL SYSTEM SPECIFICATION	1-17
1-10.	SPECIAL PURPOSE PLUG-IN UNITS	1-18
2-1.	DISPLAY COMBINATIONS	2-16
3-1.	OPTION INFORMATION LOCATOR	3-2
4-1.	BASIC LOGIC REFERENCE	4-5
4-2.	STANDARD READOUT FORMAT	4-41
4-3.	STORAGE MODE SWITCH OUTPUT LOGIC LEVELS	4-74
5-1.	RELATIVE SUSCEPTIBILITY TO STATIC DISCHARGE DAMAGE	5-6
5-2.	RECOMMENDED POWER SUPPLY TROUBLESHOOTING SEQUENCE	5-9
5-3.	TYPICAL POWER-SUPPLY RESISTANCE	5-10
5-4.	VOLTAGE TEST POINTS	5-11
6-1.	TEST EQUIPMENT	6-2
6-2.	POWER SUPPLY TOLERANCES	6-7
6-3.	THERMAL COMPENSATION ADJUSTMENTS	6-24
6-4.	RIGHT CHANNEL-SWITCH COMPENSATION	6-25
6-5.	LEFT CHANNEL-SWITCH COMPENSATION	6-26
6-6.	HIGH-FREQUENCY COMPENSATION ADJUSTMENTS	6-26

http://manoman.sqhill.com

OPERATORS SAFETY INFORMATION

The following general safety information applies to all operators and service personnel. Specific warnings will be found throughout the manual where they apply and should be followed in each instance.

WARNING statements identify conditions or practices which could result in personal injury or loss of life.

CAUTION statements identify conditions or practices which could result in damage to the equipment or other property.

The word **DANGER** on the equipment identifies areas of immediate hazard which could result in personal injury or loss of life.

The following safety symbols may appear on the equipment.

CAUTION—Refer to manual

DANGER—High voltage

Protective ground (earth) terminal

Other warning symbols where they apply.

AC Power Source and Connection

This instrument operates from a single-phase power source. It has a three-wire power cord and a two-pole, three-terminal grounding-type plug. The voltage to ground (earth) from either pole of the power source must not exceed the maximum rated operating voltage—250 volts.

Before making connection to the power source, determine that the instrument is adjusted to match the voltage of the power source, and has a suitable two-pole, three-terminal grounding-type connector. Refer any changes to qualified service personnel.

Grounding the Instrument

This instrument is safety class I equipment (IEC designation). All accessible conductive parts are directly connected through the grounding conductor of the power cord to the grounding contact of the power connector.

The power-input plug must only be inserted in a mating receptacle with a grounding contact. Do not defeat the grounding connection. Any interruption of the grounding connection can create an electric-shock hazard. Refer to qualified service personnel for verification of adequate protective grounding system to which this instrument is to be connected.

For electric-shock protection, the grounding connection must be made before making connection to the instrument's input or output terminals.

Do Not Remove Instrument Covers

To avoid electric-shock hazard, operating personnel must not remove the protective instrument covers. Component replacement and internal adjustments must be made by qualified service personnel only.

Do Not Remove CRT Implosion Shield

Do not remove the clear plastic implosion shield covering the crt face plate. This crt implosion shield provides protection to the operator from crt implosion.

http://manoman.sqhill.com

Do Not Operate in Explosive Atmosphere

To avoid explosion, do not operate this instrument in an explosive atmosphere unless it has been certified for such operation.

CAUTION

Use the Proper Fuse

Refer fuse replacement to qualified prersonnel only. To avoid fire hazard, use only the fuse specified in the parts list for your instrument and which is identical in the following respects:

A. Type: Slow blow, fast blow, etc.

B. Voltage rating: 250 V, etc.

C. Current rating.

Operating-Power Considerations

To prevent damage to the instrument always check the LINE VOLTAGE SELECTOR switch, located on the rear of the instrument, before connecting the instrument to the supply circuit.

Exercise Care with Intensity Level

Crt phosphor damage can occur under adverse conditions. Avoid any condition where an extremely bright, sharply-focused dot exists on the crt. Also, remember that the light filter reduces the apparent light output from the crt.

Prevent Instrument Damage

Plug-in units should not be installed or removed without first turning the instrument power off, to prevent instrument damage.

http://manoman.sqhill.com

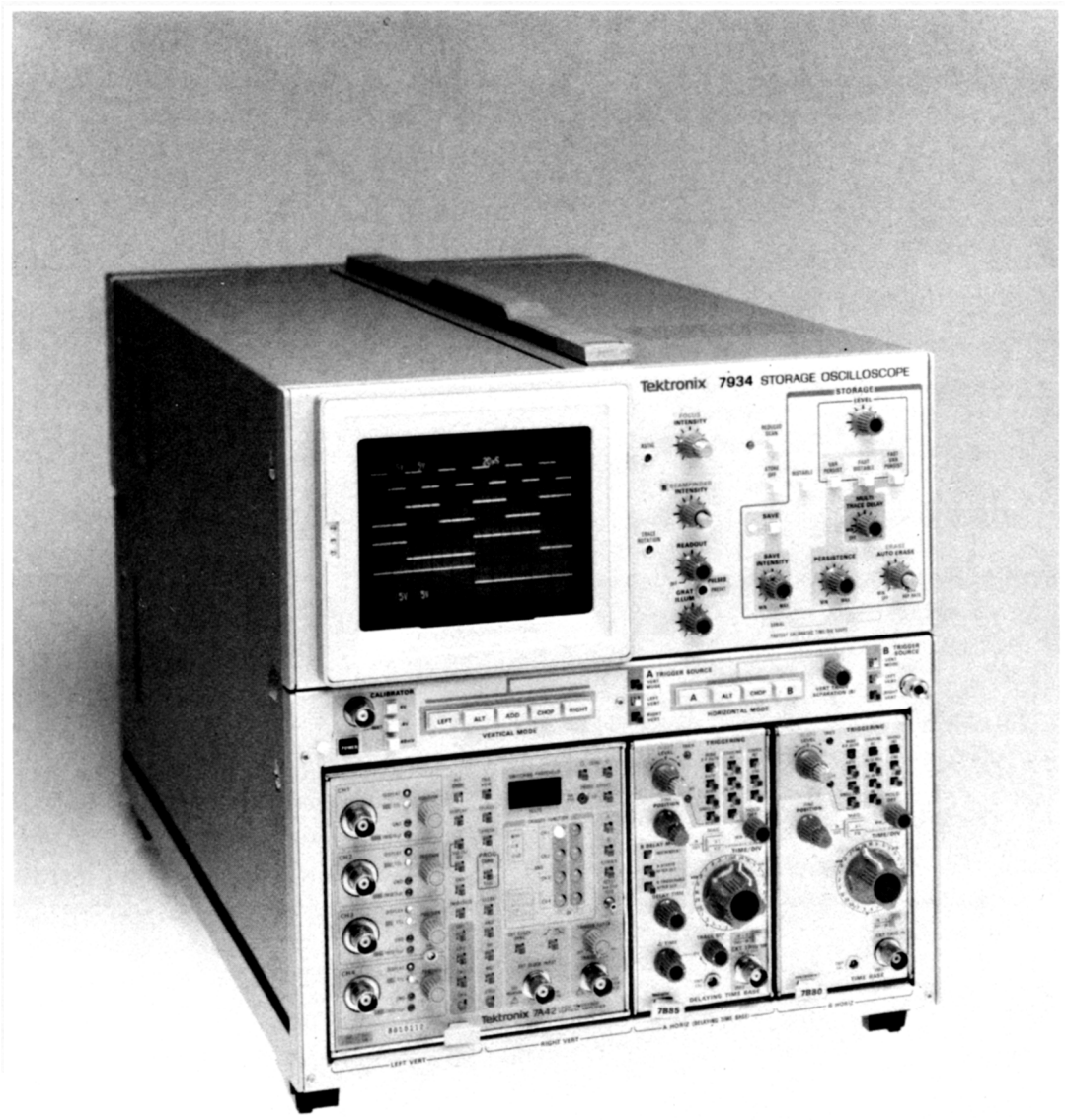

7934 FEATURES

The Tektronix 7934 Storage Oscilloscope is a solid-state, wide-bandwidth instrument designed for fast-writing speed storage applications. Three display modes are available — Nonstore, Store, and Save; as well as four storage modes — Bistable, Variable Persistence, Fast Bistable, and Fast Variable Persistence. In addition, the Reduced Scan feature increases the stored-writing speed capability.

The 7934 accepts up to four Tektronix 7000-series plug-in units. The flexibility of the plug-in feature and variety of plug-in units available allows the system to be used for many measurement applications. The left pair of plug-in compartments are reserved for vertical deflection and the right pair are reserved for horizontal deflection. Electronic switching between each pair produces multi-trace vertical and/or horizontal displays.

Power supply voltages are closely regulated to maintain instrument performance when variations in line voltage, line frequency, or plug-in load occur. The light-weight, high-efficiency power supply operates from 115- or 230-volt nominal supply sources (50 to 400 hertz).

http://manoman.sqhill.com

GENERAL INFORMATION

INTRODUCTION

Operator's Manual

The Operator's Manual is divided into three main sections.

Section 1 — General Information contains instrument description, electrical specifications, environmental characteristics, standard and recommended accessories, installation, and instructions for packaging for shipment.

Section 2 — Operating Instructions contains information relative to operating and checking the instrument operation.

Section 3 — Instrument Options contains a description of available options and gives the location of the associated information for those options.

Instruction Manual

The Instruction Manual contains both operating and servicing information for the 7934 Storage Oscilloscope. Sections 1 through 3 of the Instruction Manual contain the same information as Sections 1 through 3 of the Operator's Manual; the remaining sections of the Instruction Manual are as follows:

WARNING

The additional sections of the Instruction Manual contain servicing instructions. These servicing instructions are for use by qualified service personnel only. To avoid electric shock or other personal injury, do not perform any servicing other than that described in the Operating Instructions unless you are qualified.

Section 4 — Theory of Operation contains basic and general circuit analysis to help in understanding the operation of the instrument and that may be useful for servicing the instrument.

Section 5 — Maintenance describes routine and corrective maintenance procedures with detailed instructions for replacing assemblies, subassemblies, and individual components.

Section 6 — Checks and Adjustments contains procedures to check the operational performance and electrical characteristics of the instrument. Procedures also include methods for adjustment of the instrument to meet specifications.

Section 7 — Replaceable Electrical Parts contains information necessary to order replaceable parts and assemblies related to the electrical functions of the instrument.

Section 8 — Diagrams and Circuit Board Illustrations includes detailed circuit schematics, locations of assembled boards within the instrument, voltage and waveform information, circuit board and schematic component locators, and locations of adjustments to aid in performing the adjustment procedure.

Section 9 — Replaceable Mechanical Parts includes information necessary to order replaceable mechanical parts and shows exploded drawings which identify assemblies.

INSTALLATION

Initial Inspection

This instrument was inspected both mechanically and electrically before shipment. It should be free of mars or scratches and should meet or exceed all electrical specifications. To confirm this, inspect the instrument for physical damage incurred in transit and test the electrical performance by following the Operator's Checkout Procedure in the Operating Instructions, Section 2, and the Performance Check given in Checks and Adjustments, Section 6 of the Instruction Manual. If there is damage or deficiency, contact your local Tektronix Field Office or representative.

http://manoman.sqhill.com

Operating Power Information

This instrument can be operated from either a 115-volt or 230-volt nominal supply source, 48 to 440 hertz.

CAUTION

To prevent damage to the instrument, always check the setting of the LINE VOLTAGE SELECTOR switch located on the rear panel of the instrument before connecting the instrument to the supply circuit.

WARNING

AC POWER SOURCE AND CONNECTION. *This instrument operates from a single-phase power source. It has a three-wire power cord and two-pole, three-terminal grounding-type plug. The voltage to ground (earth) from either pole of the power source must not exceed the maximum rated operating voltage — 250 volts.*

GROUNDING. *This instrument is safety class I equipment (IEC designation). All accessible conductive parts are directly connected through the grounding conductor of the power cord to the grounding contact of the power plug.*

The power input plug must only be inserted in a mating receptacle with a grounding contact. Do not defeat the grounding connection. Any interruption of the grounding connection can create an electric shock hazard.

For electric shock protection, the grounding connection must be made before making connection to the instrument's input or output terminals.

Power Cord Information

A power cord with the appropriate plug configuration is supplied with the 7934. If you need to change the power plug, refer to Table 1-1 and Table 1-2 for power-cord and plug identification information.

Table 1-1
POWER-CORD CONDUCTOR IDENTIFICATION

Conductor	Color	Alternate Color
Ungrounded (Line)	Brown	Black
Grounded (Neutral)	Blue	White
Grounded (Earthing)	Green-Yellow	Green-Yellow

Operating Voltage

The LINE VOLTAGE SELECTOR switch (located on the rear panel) allows selection of 115-volt or 230-volt nominal line voltage operation. To convert from 115-volt to 230-volt operation, change the power cord and plug to match the power-source receptacle. Then use a small screwdriver to move the LINE VOLTAGE SELECTOR switch to the desired range.

Operating Temperature

The 7934 can be operated where the ambient air temperature is between 0 and +50° C. This instrument can be stored in ambient temperatures from −55 to +75° C. After storage at temperatures outside the operating limits, allow the chassis temperature to reach a safe operating limit before applying power.

The 7934 is cooled by air drawn in through holes in the top, side, and bottom panels and blown out through the fan exhaust. To ensure proper cooling of the instrument, maintain the clearance provided by the feet on the bottom and allow at least two inches clearance (more if possible) at the top, sides, and rear of the instrument.

Operating Position

A bail-type stand, mounted on the bottom of the instrument, permits the instrument to be tilted up about 10° for more convenient crt viewing.

PACKAGING FOR SHIPMENT

If the 7934 is to be shipped for long distances by commercial transportation, it is recommended that the instrument be repackaged in the original manner. The carton and packaging material in which your instrument was shipped should be saved and used for this purpose.

Also, if this instrument is to be shipped to a Tektronix Service Center for service or repair, attach a tag to the instrument showing the following: Owner of the instrument (with address), name of a person at your firm who can be contacted if required, complete instrument type and serial number, and a detailed description of the service required.

If the original packaging is unfit for use or is not available, package the instrument as follows:

1. Obtain a corrugated cardboard shipping carton having inside dimensions at least six inches greater than the instrument dimensions. Refer to Table 1-3 for carton test strength requirements.

http://manoman.sqhill.com

TABLE 1-2
Power-Cord and Plug Identification Information

Plug Configuration	Usage	Nominal Line-Voltage (AC)	Reference Standards	Option #
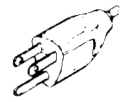	North American 120V/15A	120 V	[1]ANSI C73.11 [2]NEMA 5-15-P [3]IEC 83	Standard
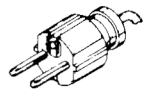	Universal Euro 220V/6-16A	220 V	[4]CEE (7),II,IV,VII [3]IEC 83	A1
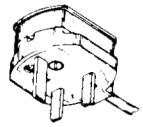	UK 240V/6-13A	240 V	[5]BS 1363 [3]IEC 83	A2
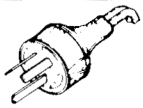	Australian 240V/6-10A	240 V	[6]AS C112	A3
	North American 240V/15A	240 V	[1]ANSI C73.20 [2]NEMA 6-15-P [3]IEC 83	A4
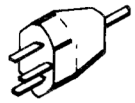	Switzerland 220V/6-10A	220 V	[7]SEV	A5

[1]ANSI—American National Standards Institute
[2]NEMA—National Electrical Manufacturer's Association
[3]IEC—International Electrotechnical Commission
[4]CEE—International Commission on Rules for the Approval Electrical Equipment
[5]BS—British Standards Institution
[6]AS—Standards Association of Australia
[7]SEV—Schweizevischer Elektrotechischer Verein

2. Enclose the instrument with polyethylene sheeting or equivalent to protect the finish of the instrument.

3. Cushion the instrument on all sides by tightly packing dunnage or urethane foam between the carton and the instrument, allowing three inches on each side.

4. Seal the carton with shipping tape or with an industrial stapler.

5. Mark the address of the Tektronix Service Center and your return address on the carton in one or more prominent locations.

Table 1-3
SHIPPING CARTON TEST STRENGTH

Gross Weight (pounds)	Carton Test Strength (pounds)
0 - 10	200
10 - 30	275
30 - 120	375
120 - 140	500
140 - 160	600

http://manoman.sqhill.com

SPECIFICATION

The electrical characteristics listed in Table 1-4 apply at ambient temperatures between 0 and +50° C, unless otherwise stated, when the following conditions are met: 1) The instrument was adjusted at an ambient temperature between +20 and +30° C; 2) The instrument is allowed a 30-minute warm-up period; 3) The instrument is operated in an environment that meets the limits described in Table 1-5. All specifications are valid in both Full Scan and Reduced Scan modes unless stated otherwise.

Any applicable conditions not listed above are expressly stated as part of the appropriate characteristic.

Table 1-4
ELECTRICAL CHARACTERISTICS

Characteristic	Performance Requirement
VERTICAL SYSTEM	
Deflection Factor	Compatible with all 7000-series plug-in units.
Difference Between Vertical Compartments	1% or less.
Low-Frequency Linearity	0.1 division or less compression of a center-screen two-division display positioned anywhere vertically within graticule area.
Bandwidth	Varies with plug-in unit selected. See 7934 Oscilloscope Vertical System Specification, Table 1-8.
Isolation Between Vertical Compartments	
All Vertical Modes	At least 100:1 from dc to 150 MHz and at least 30:1 from 150 MHz to 500 MHz.
Delay Line	Permits viewing the leading edge of triggering signal. *NOTE* *Not all 7B50-series time-base units can display the leading edge of the trigger signal in the 7934. Refer to the Tektronix Products Catalog under the specific time-base unit for recommended mainframe use.*
Vertical Display Modes	Selected by front-panel VERTICAL MODE switch.
LEFT	Signal from left vertical plug-in unit displayed.
ALT	Display alternates between left and right vertical plug-in units.
ADD	Display is algebraic sum of left and right vertical plug-in units.
CHOP	Display chops between left and right vertical plug-in units.
RIGHT	Signal from right vertical plug-in unit displayed.
Chopped Mode Repetition Rate	1 MHz within 20%.
Vertical Trace Separation	Positions B trace at least four divisions above and below A trace when 7934 operates in dual-sweep mode.

http://manoman.sqhill.com

Table 1-4 (cont)

Characteristic	Performance Requirement
HORIZONTAL SYSTEM	
Deflection Factor	Compatible with all 7000-series plug-in units.
Difference Between Horizontal Compartments	1% or less.
Fastest Calibrated Sweep Rate	0.5 nanosecond/division.
Horizontal Display Mode	Selected by front-panel HORIZONTAL MODE switch.
A	A horizontal plug-in unit displayed.
ALT	Display alternates between A and B horizontal plug-in units.
CHOP	Display chops between A and B horizontal plug-in units.
B	B horizontal plug-in unit displayed.
Chopped Mode Repetition Rate	200 kHz within 20%.
Phase Shift Between Vertical and Horizontal Deflection Systems	2° or less from dc to at least 35 kHz.
With Option 02 (B HORIZ Compartment Only)	2° or less from dc to 1 MHz.
Bandwidth (7934 Horizontal System Only with 10 Division Reference)	From dc to at least 1 MHz.
With Option 02 (B HORIZ Compartment Only)	From dc to at least 1 MHz.
TRIGGER SYSTEM	
A and B TRIGGER SOURCE	Selected by front-panel TRIGGER SOURCE switches.
VERT MODE	From vertical plug-in unit selected by VERTICAL MODE switch; CHOP mode signals are added algebraically.
LEFT VERT	From left vertical plug-in unit only.
RIGHT VERT	From right vertical plug-in unit only.

http://manoman.sqhill.com

Table 1-4 (cont)

Characteristic	Performance Requirement
CALIBRATOR	
Waveshape	Square wave.
Polarity	Positive going with baseline near zero volts.
Source Impedance	Approximately 450 ohms.
Output Voltage	Selected by front-panel CALIBRATOR switch.
Into 100 Kilohms or Greater	40 mV, 0.4 V, 4 V.
Into 50 Ohms	4 mV, 40 mV, 0.4 V.
Output Current	40 mA available through CALIBRATOR output with optional BNC-to-Current Loop adapter. CALIBRATOR switch must be set to 4 V for calibrated current output.
Amplitude Accuracy (P-P Voltage)	Within 1%.
Repetition Rate	1 kHz within 0.25%.
Duty Factor	49.8 to 50.2%.
Rise Time and Fall Time	250 nanoseconds or less into 100 pF or less.
SIGNAL OUTPUTS	
Sawtooth Output	Selected by internal Sweep Selector jumper.
Source	A HORIZ time-base unit or B HORIZ time-base unit.
A Sweep	Derived from A HORIZ time-base sweep.
B Sweep	Derived from B HORIZ time-base sweep.
Polarity	Positive going with baseline at 0 V, within 1 V, into 1 Megohm.
Output Voltage	
Rate of Rise	
Into 50 ohms	50 mV/unit of time selected by time-base unit time/division switch, within 15%; 100 ns/division sweep rate maximum.
Into 1 Megohm	1 V/unit of time selected by time-base unit time/division switch, within 10%; 1 μs/division sweep rate maximum.
Output Resistance	Approximately 950 ohms.

http://manoman.sqhill.com

Table 1-4 (cont)

Characteristic	Performance Requirement
Gate Output	Selected by internal Gate Selector jumper.
Source	A HORIZ time-base unit or B HORIZ time-base unit.
A Gate	Derived from the A HORIZ time-base unit main gate.
B Gate	Derived from the B HORIZ time-base unit main gate.
Dly'd Gate	Derived from the A HORIZ time-base unit delayed gate.
Polarity A or B Gate	Positive going with baseline at 0 V, within 1.0 V, into 1 Megohm.
A Dly'd Gate	Positive level when A time-base delayed sweep or B sweep is enabled. O V, within 1.0 V, into 1 Megohm when sweeps are disabled. Output is always positive when no plug-in is used or plug-in does not provide delayed gate.
Output Voltage Into 50 Ohms	0.5 V within 10%.
Into 1 Megohm	10 V within 10% (up to 1 μs/division sweep rate).
Rise Time Into 50 ohms	20 nanoseconds or less.
Output Resistance	Approximately 950 ohms.
Vertical Signal Out	Selected by B TRIGGER SOURCE switch.
Source	Same as B TRIGGER SOURCE.
Output Voltage Into 50 Ohms	25 mV/division of vertical deflection within 25%.
Into 1 Megohm	0.5 V/division of vertical deflection within 25%.
Bandwidth into 50 Ohms	Varies with vertical plug-in selected; see 7934 Oscilloscope Vertical System Specification, Table 1-8.
DC Centering	0 V, within 1 V, into 1 megohm.
Aberrations	25% or less p-p within 2 nanoseconds of step.
Output Resistance	Approximately 950 ohms.
Z-AXIS SYSTEM	
External Z-Axis Input Polarity and Sensitivity	Positive 2 V provides complete blanking from maximum-intensity condition; negative 2 V provides complete unblanking from minimum-intensity condition.
Low-Frequency Response	To dc.
Input Resistance	Approximately 470 ohms.
Maximum Input Voltage	Within 15 V (dc plus peak ac).
Maximum Repetition Rate	1 MHz.

http://manoman.sqhill.com

Table 1-4 (cont)

Characteristic	Performance Requirement
READOUT DISPLAY	
Readout Modes	Selected by front-panel READOUT control.
Free Run Readout (READOUT Control in Variable Area)	
Storage Mode	
STORE OFF	Readout continuously displayed.
BISTABLE or VAR PERSIST	Readout continuously displayed, except turns off during erase cycle.
FAST BISTABLE or FAST VAR PERSIST	Readout continuously displayed, except turns off at beginning of erase cycle or at initiation of single-sweep reset until end of transfer cycle. Also, turns off when displayed time base operates in other than single-sweep mode and MULTI TRACE DELAY control is not in detent.
SAVE	Readout displayed for approximately one second after save mode is entered, then turns off.
Pulsed Readout (READOUT Control in PULSED Detent)	
Storage Mode	
STORE OFF	One frame of readout is provided at end of displayed sweep.
BISTABLE	Readout continuously displayed except turns off from beginning of erase cycle until end of first displayed sweep.
VAR PERSIST	One frame of readout is provided at the end of displayed sweep. Erase cycle inhibits readout display.
FAST BISTABLE	Readout continuously displayed except turns off at beginning of erase cycle, or at initiation of single-sweep reset until end of transfer cycle. Also, turns off when displayed time base operates in other than single-sweep mode and when MULTI TRACE DELAY control is not in detent.
FAST VAR PERSIST	One frame of readout is provided at the end of transfer cycle; turns off when displayed time base operates in other than single-sweep mode and when the MULTI TRACE DELAY control is not in detent.
SAVE	
BISTABLE or FAST BISTABLE	Readout displayed for approximately one second after SAVE mode is entered, then turns off.
VAR PERSIST	Allows one frame of readout to be displayed at end of displayed sweep.
FAST VAR PERSIST	Allows one frame of readout to be displayed at end of transfer cycle.
Character Height	
Full Scan	0.35 to 0.5 division.
Reduced Scan	At least 0.2 division.

http://manoman.sqhill.com

Table 1-4 (cont)

Characteristic	Performance Requirement
DISPLAY	
Cathode Ray Tube	
Graticule	
Type	Internal; illuminated with variable edge lighting.
Area	
Full Scan	8 x 10 divisions; 0.9 cm/division.
Reduced Scan	8 x 10 divisions; 0.45 cm/division, centered on faceplate.
Phosphor	P31.
Stored Vertical and Horizontal Resolution in VAR PERSIST and FAST VAR PERSIST (Full Scan Only)	10 lines/division.
High Voltage — Overall Accelerating Voltage	Approximately 10 kV (approximately 12 kV in Reduced Scan).
Geometry	Within 0.1 division of vertical and horizontal graticule lines.
Beamfinder	Actuating BEAMFINDER limits display to within graticule area.
STORAGE	
Stored Writing Speed	
Full Scan (Center 6 x 8 Divisions)	
FAST VAR PERSIST	300 divisions/microsecond (270 cm/μs).
FAST BISTABLE	50 divisions/microsecond (45 cm/μs).
VAR PERSIST	2 divisions/microsecond (1.8 cm/μs).
BISTABLE	0.03 division/microsecond (0.027 cm/μs).
Reduced Scan (Center 8 x 10 Divisions)	
FAST VAR PERSIST	8,800 divisions/microsecond (4,000 cm/μs).
FAST BISTABLE	776 divisions/microsecond (350 cm/μs).
VAR PERSIST	12 divisions/microsecond (5.4 cm/μs).
BISTABLE	0.2 division/microsecond (0.09 cm/μs).
Stored Save Time (SAVE Mode)	
BISTABLE and FAST BISTABLE	At least 30 minutes (SAVE INTENSITY at minimum).
Stored View Time	
VAR PERSIST and FAST VAR PERSIST	30 seconds or more at maximum persistence.

http://manoman.sqhill.com

Table 1-4 (cont)

Characteristic	Performance Requirement
Auto Erase View Time	
Minimum	Less than 1 second.
Maximum	Greater than 10 seconds.
Multi Trace Delay Time	
Minimum	Less than 1 second.
Maximum	Greater than 4 seconds.

REAR-PANEL CONNECTORS AND SWITCHES

CONTROL ILLUMINATION	High, medium, and off (three position switch located on rear panel of power supply).
PROBE POWER	Two connectors for compatible Tektronix probes.
REMOTE RESET INPUT	Input to reset single-sweep function of time-base units installed in A and B HORIZ compartments (compatible time-base units only). High-to-low transition resets sweep.
REMOTE STORAGE GATE INPUT	Allows remote operation of high-speed transfer. Low-to-high transition enables High Speed Target to receive information to be stored. High-to-low transition initiates transfer from high-speed target to storage target.
REMOTE ERASE INPUT	Allows remote erasure of stored display. High-to-low transition initiates an erase cycle when in a storage mode.
REMOTE SAVE INPUT	Allows remote control of Save mode. High state allows control from front panel. Low state holds storage circuitry in Save mode when in storage mode.

POWER SOURCE

Voltage Range (ac, rms)	Selected by rear-panel LINE VOLTAGE SELECTOR switch.
115 V Nominal	From 90 V to 132 V.
230 V Nominal	From 180 V to 250 V
Line Frequency	From 48 to 440 Hz.
Maximum Power Consumption	230 Watts.
Maximum Current	
90 V Line	3.5 amps at 60 Hz.
180 V Line	1.8 amps at 60 Hz.
Line Fuse	4 amp fast blow.

http://manoman.sqhill.com

Table 1-5
ENVIRONMENTAL

Characteristic	Information
	NOTE *This instrument will meet the electrical characteristics given in the Performance Requirement column of Table 1-4 over the following environmental limits.*
Temperature Range	
Operating	0 to +50° C.
Nonoperating	−55 to +75° C.
Altitude	
Operating	5 kilometers (15,000 feet).
Nonoperating	Test limit 15 kilometers (50,000 feet).
EMC (Electromagnetic Compatibility)	Meets requirements of MIL-STD-461A, when tested in accordance with the following test methods of MIL-STD-462.
All Instruments	CS-01, CS-06, and CE-03 Part 4 Curve 1.
Option 03	*NOTE* *The EMI mesh filter must be installed and any unused plug-in compartments must be covered with a blank plug-in panel (EMC shielded) in order to meet EMC specifications. See Instrument Options section for additional information.* FCC Part 15 Subpart J Class A, VDE 0871 Class B, RS01, RS03 (limited to 1 GHz), RE02 Part 7, RE02 Part 4.
Vibration	Tested to MIL-T-28800C, Section 4.5.5.3.1 Type III, Class 5, Style F.
Shock	Tested to MIL-T-28800C, Section 4.5.5.4.1, Type III, Class 5, Style F.
Bench Handling	Tested to MIL-T-28800C, Section 4.5.5.4.3, Type III, Class 5, Style F.
Transportation	Qualified under National Safe Transit Committee test procedure 1A, Category II.
Bounce	NSTA, Project 1A-B-1.
Drop (Packaged Product)	NSTA, Project 1A-B-2.
Humidity	Tested to MIL-STD-810C, Method 507-1, Procedure IV, modified as specified in Mil-T-28800C, paragraph 4.5.5.1.12, except: 90 - 95% relative humidity (steps 5 and 6); operating tests at 50° C (step 5, second cycle).
Electrostatic Discharge	
Operating	0 to 15 kV with no performance degradation.
Nonoperating	0 to 20 kV with no instrument damage.

http://manoman.sqhill.com

Table 1-6
PHYSICAL

Characteristic	Information
Ventilation	Safe operating temperature maintained by dc fan.
Warm-up Time	30 minutes for rated accuracy.
Finish	Anodized front and rear panel with blue-vinyl painted aluminum cabinet.
Overall Dimensions	Measured at maximum points; see Fig. 1-1 for dimensional drawing.
Height	34.5 cm (13.6 inches).
Width	30.5 cm (12.0 inches).
Length	62.25 cm (24.5 inches).
Net Weight (Instrument Only)	17.2 kg (38.0 pounds).

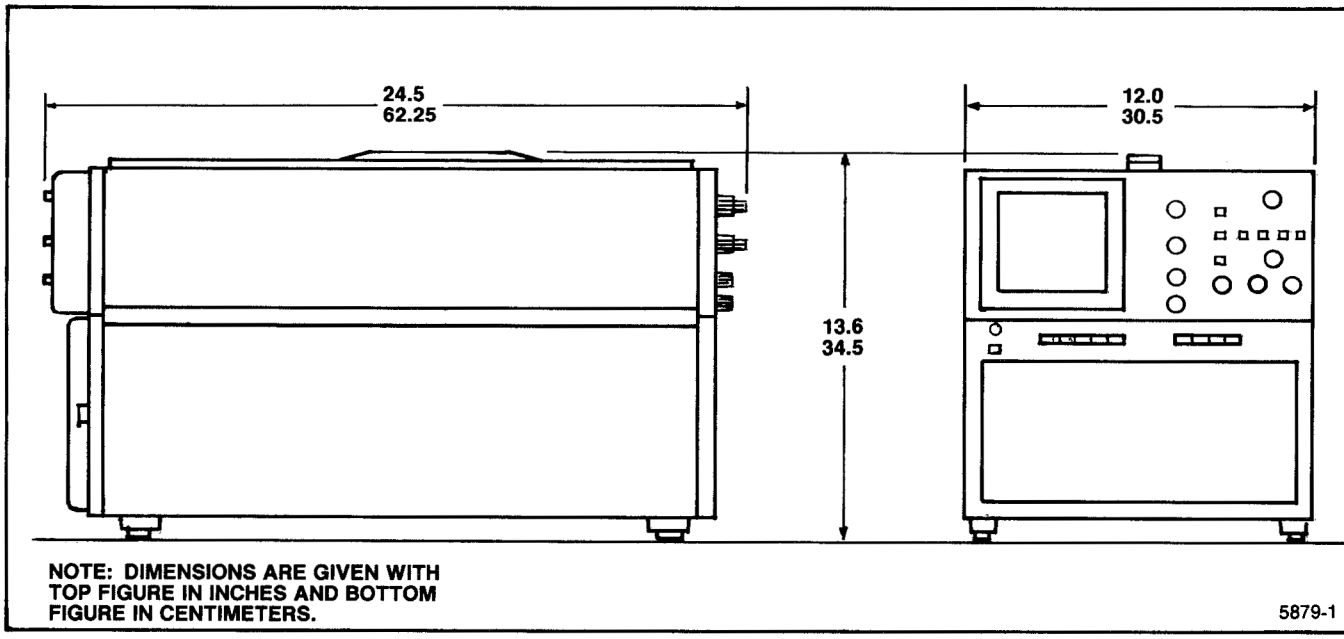

Figure 1-1. 7934 dimensional drawing.

http://manoman.sqhill.com

SYSTEM ELECTRICAL SPECIFICATION

The Tektronix 7934 Oscilloscope system provides exceptional flexibility in operation with a wide choice of general- and special-purpose plug-in units. The type number of a particular plug-in unit identifies its usage as follows:

The first digit (7) denotes that the unit is designed to operate in a 7000-series oscilloscope system.

The second letter describes the purpose of the plug-in unit as follows:

A — Amplifier
B — Real-time Time-base
C — Curve Tracer
D — Digital Unit
L — Spectrum Analyzer
M — Miscellaneous
S — Sampling Unit
T — Sampling Time-base

The third and fourth digits of the plug-in type number carry no special connotation.

An "N" suffix letter added to the normal four-digit type number means that the instrument does not have the circuitry necessary to encode data for the 7000-series readout system.

Table 1-7 lists any incompatibilities between the 7934 and the variety of plug-in units available.

Table 1-8 lists the vertical specifications which are system dependent. For more complete specifications on vertical plug-in units for the 7934 Oscilloscope system, refer to the current Tektronix Products Catalog.

Table 1-9 lists the horizontal specifications which are system dependent. For more complete specifications on horizontal plug-in units for the 7934 Oscilloscope system, refer to the current Tektronix Products Catalog.

Table 1-10 lists some of the special purpose plug-in units that can be used with the 7934 Oscilloscope.

http://manoman.sqhill.com

Table 1-7
PLUG-IN INCOMPATIBILITIES

The 7934 Oscilloscope is compatible with Tektronix 7000-Series Plug-In units with the exceptions listed in the following table:

Plug-In Unit	Operating Conditions	Symptoms	Cause
7A21N	All.	No display.	No vertical signal connection.
7B50 7B51 7B52 7B53A 7B53AN 7B53N	All.	Leading edge of triggering waveform cannot be viewed.	7934 delay line length.
7B50 7B51 7B70 7B71	7934 Horizontal Mode alternate with both horizontal time-base units set for single-sweep operation.	Only one time-base unit will reset. SAVE, AUTO ERASE, PULSED readout, and fast storage modes do not operate normally.	7934 alternate sweep switching logic locks out one time-base unit; these time-base units do not reset when locked out.
	7934 fast storage modes with time-base unit set for single-sweep operation.	Time-base unit will not automatically reset.	Time-base unit is locked out during erase.
7B51 7B71 7B85	7934 bistable or variable persistence with horizontal ALT or CHOP mode and A HORIZ time-base unit in repetitive sweep mode, delaying B HORIZ time-base unit in single-sweep mode.	Intensified zone(s) may appear at incorrect position.	Delay in 7934 storage logic between end of sweep lockout and single-sweep reset.
7B85	7B85 set for single-sweep operation with delta-time function operational.	SAVE, AUTO ERASE, PULSED readout, and fast storage modes do not operate normally.	7B85 sweeps once but needs to sweep twice for generation of holdoff pulse.
7B92 7B92A	Time-base unit set for alternate and single-sweep modes.	SAVE, AUTO ERASE, PULSED readout, and fast storage modes do not operate normally.	Time-base unit sweeps only once when reset, whereas both main and delayed sweeps are required to generate a holdoff pulse.
7L5	7L5 set for stored display mode.	7934 storage modes do not operate normally; no pulsed readout display.	7L5 Sweep Gate remains HI.
	7L5 set for non-storage mode with manual or normal sweep.	Single-sweep reset or erase causes 7L5 to operate in single-sweep mode.	7L5 control logic.
	7L5 set for non-storage mode with 7934 set for fast storage mode and MULTI TRACE DELAY operation.	Crt display flashes.	7L5 single-sweep logic line pulses when single-sweep reset occurs, causing logic to oscillate.

http://manoman.sqhill.com

Table 1-7 (cont)

Plug-In Unit	Operating Conditions	Symptoms	Cause
7L12	Any 7934 storage mode with 7L12 set for single-sweep operation.	7L12 will not automatically reset after an erase or multi-trace cycle.	7L12 single-sweep logic output is always LO.
	7934 fast storage modes with MULTI TRACE DELAY control operational.	Storage display will not remain viewable.	
7L13	7934 fast storage modes with 7L13 set for single-sweep operation.	7L13 will not activate multi-trace function.	7L13 does not provide single-sweep reset.
7S12	7S12 set for single-scan operation.	7S12 will not start by remote reset or camera reset or after an erase cycle; 7S12 start button will not activate multi-trace function.	7S12 does not provide single-sweep reset.
	7934 fast storage modes with MULTI TRACE DELAY control operational and 7S12 set for single scan.	Storage display will not remain viewable.	7S12 single-sweep logic output is always LO.
7S14	7S14 set for single-scan mode.	7934 storage modes and PULSED readout do not operate normally.	Sweep gate remains HI at the end of a scan. (Can be overcome by activating both the Rep and Single Scan buttons.)
	7S14 set for single-scan operation (both Rep and Single Scan buttons activated).	7S14 will not start after an erase cycle.	7S14 has no single-sweep logic output.
	7934 fast storage modes with MULTI TRACE DELAY control operable and 7S14 set for single-scan operation (both Rep and Single Scan buttons activated).	Storage display will not remain viewable.	
7T11A	All.	SAVE, AUTO ERASE, PULSED readout, and fast storage modes do not operate normally; 7T11A will not alternate with other sweep plug-ins.	7T11A does not generate holdoff pulses.

http://manoman.sqhill.com

Table 1-8
7934 OSCILLOSCOPE VERTICAL SYSTEM SPECIFICATION

Amplifier Plug-In Unit	Probe	Bandwidth (MHz)	Rise Time (ns)	Accuracy* (0 to +50°C)		Vertical Signal Out	
				Ext Cal (%)	Int Cal (%)	Bandwidth (MHz)	Rise Time (ns)
7A11	Integral	250	1.4	2	3	140	2.5
7A12	None	120	2.9	2	3	110	3.2
7A13	None	105	3.4	1.5	2.5	100	3.5
	P6130						
	P6055	65	5.4			65	5.4
7A14	P6021	55	6.4	2	3	50	7.0
	P6022	120	2.9			100	3.5
7A15A	None	80	4.4	2	3	70	5.0
	P6057			3	4		
7A16A	None	225	1.6	2	3	140	2.5
	P6130	200	1.8	3	4		
7A17	None	150	2.4			15	24
7A18A	None	100	3.5	2	3	90	4.7
	P6130	75	4.7	3	4		
7A19	None	500	0.8	3	4	300	1.2
	P6056			4	5		
	P6201	430	0.9				
7A22	None or Any	1 (within 10%)	350 (within 9%)	2	3	1 (within 9%)	350 (within 9%)
7A24	None	500	1.0	3	4	140	2.5
	P6056	300	1.2	4	5		
	P6201	280	1.3				
7A26	None	200	1.8	2	3	140	2.5
	P6201	155	2.4	3	4		
7A29	None	500	0.7	2	4	300	1.2
	P6056			3	5		
7A42	None	300	1.2	3	4	NA	NA
	P6320			4	5		
	P6131						

***EXT CAL, 0 to +50°C** — Plug-in gain set at a temperature within 10°C of operating temperature using an external calibrator with accuracy within 0.25%.

INT CAL, 0 to +50°C — Plug-in gain set at a temperature within 10°C of operating temperature using the 7934 calibrator output signal.

http://manoman.sqhill.com

Table 1-9
7934 OSCILLOSCOPE HORIZONTAL SYSTEM SPECIFICATION

Time-Base Unit	Performance Feature	Maximum Calibrated Sweep Rate	Triggered Frequency Range
7B10	Delayed Sweep	0.5 ns/div	DC to 700 MHz
7B15	Delta Delaying Sweep	0.5 ns/div	DC to 700 MHz
7B50A	Delayed Sweep	5 ns/div	DC to 150 MHz
7B70	Delayed Sweep and Ext Amplifier	2 ns/div	DC to 200 MHz
7B71	Dual-Sweep Delaying and Delayed	2 ns/div	DC to 200 MHz
7B80	Delayed Sweep	1 ns/div	DC to 400 MHz
7B85	Delaying Sweep	1 ns/div	DC to 400 MHz
7B87	Time Base (with pre-trigger acquire clock when used with 7854 only)	1 ns/div	DC to 400 MHz
7B92A	Display Switching	0.5 ns/div	DC to 500 MHz

http://manoman.sqhill.com

Table 1-10
SPECIAL PURPOSE PLUG-IN UNITS

Plug-In Unit	Performance Feature
7CT1N	Low-Power Semiconductor Curve Tracer
7D01/7D01F	Logic Analyzer
7D02/7D02F	Logic Analyzer
7D10	Digital Events Delay
7D11	Digital Delay
7D12	A/D Converter — plug-in modules provide flexible measurement capability
7D13A	Digital Multimeter — Temperature, voltage, current, and resistance measurement
7D14	Directly Gated Counter
7D15	Universal Counter Timer
7D20	Programmable Digitizer
7K11	CATV Preamplifier
7L5	20 Hz to 5 MHz Spectrum Analyzer
7L12	100 kHz to 1.7 GHz Spectrum Analyzer
7L13	1 kHz to 1.8 GHz Spectrum Analyzer
7L14	10 kHz to 1.8 GHz Spectrum Analyzer
7L18	1.5 GHz to 60 GHz Spectrum Analyzer
7M11	Dual 50-Ohm Delay Line
7M13	Readout Access Unit
7S11	Accepts Plug-In Sampling Heads
7S12	Time Domain Reflectometer and Sampling Applications
7S14	Dual-Trace Delay Sweep Sampler
7T11A	Random or Sequential, Equivalent or Real-Time Sampling Time Base

http://manoman.sqhill.com

STANDARD ACCESSORIES

Operators Manual	1 each	070-5879-00
Instruction Manual	1 each	070-5880-00
Gray Faceplate Protector (installed)	1 each	378-0625-02
Storage Green Faceplate Filter	1 each	378-0625-08
Power Cord	1 each	161-0066-00

RECOMMENDED ACCESSORIES

(not included)

The following accessories are available for use with the 7934 Oscilloscope. For more information or to order recommended accessories, contact your local Tektronix Field Office or representative.

Current Loop Probe Adapter	012-0341-00
Camera, Low-Cost General Purpose	C-5A
Camera, For Automatic Single-Sweep Photos	C-52
Tek Lab Cart	Model 3

http://manoman.sqhill.com

http://manoman.sqhill.com

OPERATING INSTRUCTIONS

To operate the 7934 effectively, the user must become familiar with its operation and capabilities. This section describes how to use the front- and rear-panel controls and connectors.

For detailed operating information on specific plug-in units used with the 7934, refer to the manual for that unit.

WARNING

To avoid electric-shock hazard, see installation in the General Information section of this manual before operating this instrument.

PLUG-IN UNITS

The 7934 accepts up to four Tektronix 7000-Series plug-in units. This feature allows selection of bandwidth, sensitivity, display mode, etc., and provides for future expansion of the system.

The overall capabilities of the system are mainly determined by the characteristics of the selected plug-ins. Some typical combinations are given under Applications in this section. For information on other plug-in units, refer to the current Tektronix Products Catalog.

Installation of Plug-In Units

CAUTION

To prevent instrument damage, plug-in units should not be installed or removed without first turning the instrument power off.

To install a plug-in unit into a compartment, align the slots in the top and bottom of the plug-in unit with the associated guide rails in the plug-in compartment. Insert the plug-in unit into the compartment until it locks into place. To remove a plug-in unit, pull outward on the release latch to disengage the plug-in. To meet the EMC (electromagnetic compatibility) specifications, cover all unused plug-in compartments with an EMC shielded blank plug-in panel, Tektronix Part 016-0155-00.

The gain of the 7934 vertical and horizontal systems has been normalized to allow plug-in units to be interchanged among plug-in compartments without readjustment of the system. The basic calibration of the plug-in units should be checked when installed to verify their accuracy (refer to the operating instructions in the plug-in manual).

CONTROLS AND CONNECTORS

The 7934 front and rear panels are shown in Figure 2-1 and Figure 2-2. A brief, functional description of each control and connector is included in these illustrations. Refer to Detailed Operating Information for additional information.

Front-Panel Color Coding

The 7934 front panel is color coded to define areas by function. Blue identifies controls that affect the display mode; green identifies triggering controls.

Other colors such as gray, orange, and yellow have no functional assignment, but indicate a relationship among controls and/or connectors.

OPERATOR'S CHECKOUT PROCEDURE

The Operator's Checkout Procedure may be used to verify proper operation of the controls and to get acquainted with the instrument. Only instrument functions (not measurement quantities or specifications) are checked in this procedure; therefore, a minimum amount of test equipment is required. If performing the Operator's Checkout Procedure reveals improper performance or instrument malfunction, first check the operation of associated equipment; then refer to qualified service personnel for repair or adjustment of the instrument.

Test Equipment Required

The following test equipment is required for the Operator's Checkout Procedure. Other test equipment which meets these requirements may be substituted. When other equipment is substituted, the control settings or setup may need to be altered.

http://manoman.sqhill.com

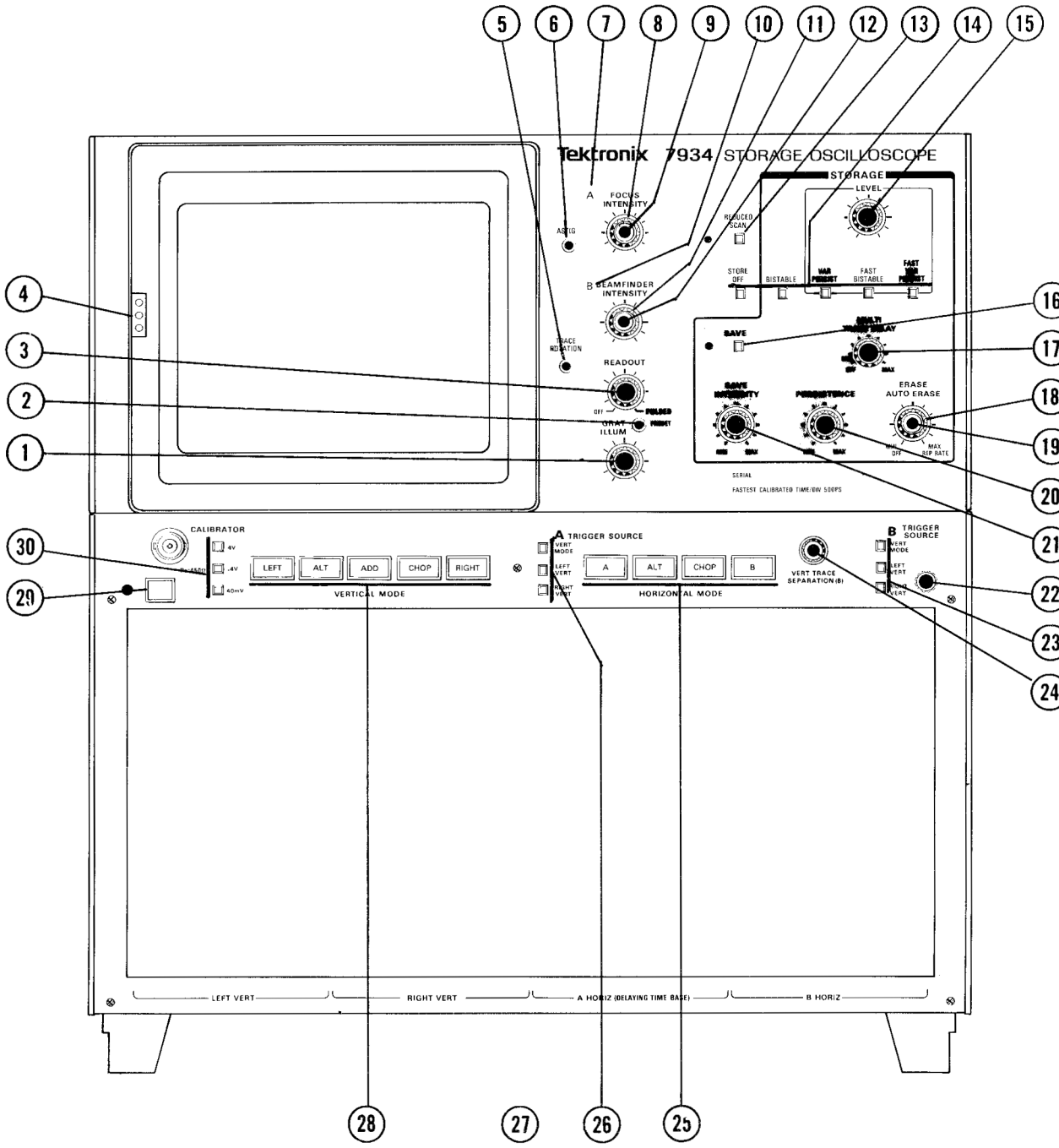

NOTE

HORIZONTAL SELECTOR SWITCH LOCATED AT THE REAR OF THE A HORIZ COMPARTMENT.

5879-2

Fig. 2-1a. Front-panel controls, connectors and indicators.

http://manoman.sqhill.com

FRONT-PANEL CONTROLS, CONNECTORS, AND INDICATORS

(1) **GRAT ILLUM** — Controls illumination of graticule lines.

(2) **PRESET (Readout)** — Screwdriver adjustment to set PULSED Readout Mode intensity.

(3) **READOUT** — Controls brightness of the readout display. Disables Readout System in counterclockwise OFF detent. Activates Pulsed Readout Mode in clockwise PULSED detent.

(4) **Camera Power Connector (not labeled)** — Three-pin connector provides power for camera operation and receives single-sweep-reset signal.

(5) **TRACE ROTATION** — Screwdriver adjustment to align trace(s) with graticule lines.

(6) **ASTIG** — Screwdriver adjustment used with the FOCUS control to obtain a well-defined display.

(7) **A INTENSITY (indicator)** — Illuminates when A HORIZ plug-in selected for display.

(8) **A INTENSITY** — Controls brightness of trace produced by the plug-in installed in the A HORIZ compartment.

(9) **FOCUS** — Optimizes crt trace definition.

(10) **B INTENSITY (indicator)** — Illuminates when B HORIZ plug-in selected for display.

(11) **B INTENSITY** — Controls brightness of trace produced by the plug-in installed in the B HORIZ compartment.

(12) **BEAMFINDER** — When pressed, compresses and defocuses display within graticule area.

(13) **REDUCED SCAN (switch and indicator)** — Calibrated area of crt is reduced to inner half-size graticule and stored writing speed is increased when indicator is on.

(14) **Storage Mode Switch (not labeled)** — Selects one of four storage modes or the STORE OFF display mode.

(15) **STORAGE LEVEL** — Varies writing speed of VAR PERSIST, FAST BISTABLE, and FAST VAR PERSIST storage modes.

(16) **SAVE (control and indicator)** — Retains stored display in a noneraseable mode with continuously variable intensity when indicator is on.

(17) **MULTI TRACE DELAY** — Controls time between successive sweeps when operating in FAST BISTABLE and FAST VAR PERSIST storage modes.

(18) **AUTO ERASE** — Controls viewtime in automatic erase mode.

(19) **ERASE** — Erases stored display.

(20) **PERSISTENCE** — Controls rate of continuous erasure of VAR PERSIST and FAST VAR PERSIST storage display modes.

(21) **SAVE INTENSITY** — Controls intensity of the SAVE display.

(22) **Ground (not labeled)** — Binding post to establish common ground between associated equipment.

(23) **B TRIGGER SOURCE** — Selects internal trigger source for B HORIZ plug-in unit.

(24) **VERT TRACE SEPARATION (B)** — Vertically positions the B HORIZ trace with respect to the A HORIZ trace (dual-sweep modes only).

(25) **HORIZONTAL MODE** — Selects source of horizontal signal and horizontal display mode.

(26) **A TRIGGER SOURCE** — Selects internal trigger source for A HORIZ plug-in unit.

(27) **Horizontal Selector (located at rear of A HORIZ compartment)** — Three position switch which over-rides the HORIZONTAL MODE switch to determine the source of the horizontal display signal.

(28) **VERTICAL MODE** — Selects source of vertical input signal and vertical display mode.

(29) **POWER (switch and indicator)** — Switch controls power to instrument; indicator illuminates when power is applied.

(30) **CALIBRATOR** — Provides calibrated square-wave voltages at 1 kHz repetition rate at CALIBRATOR output connector.

Fig. 2-1b. Front-panel controls, connectors and indicators.

http://manoman.sqhill.com

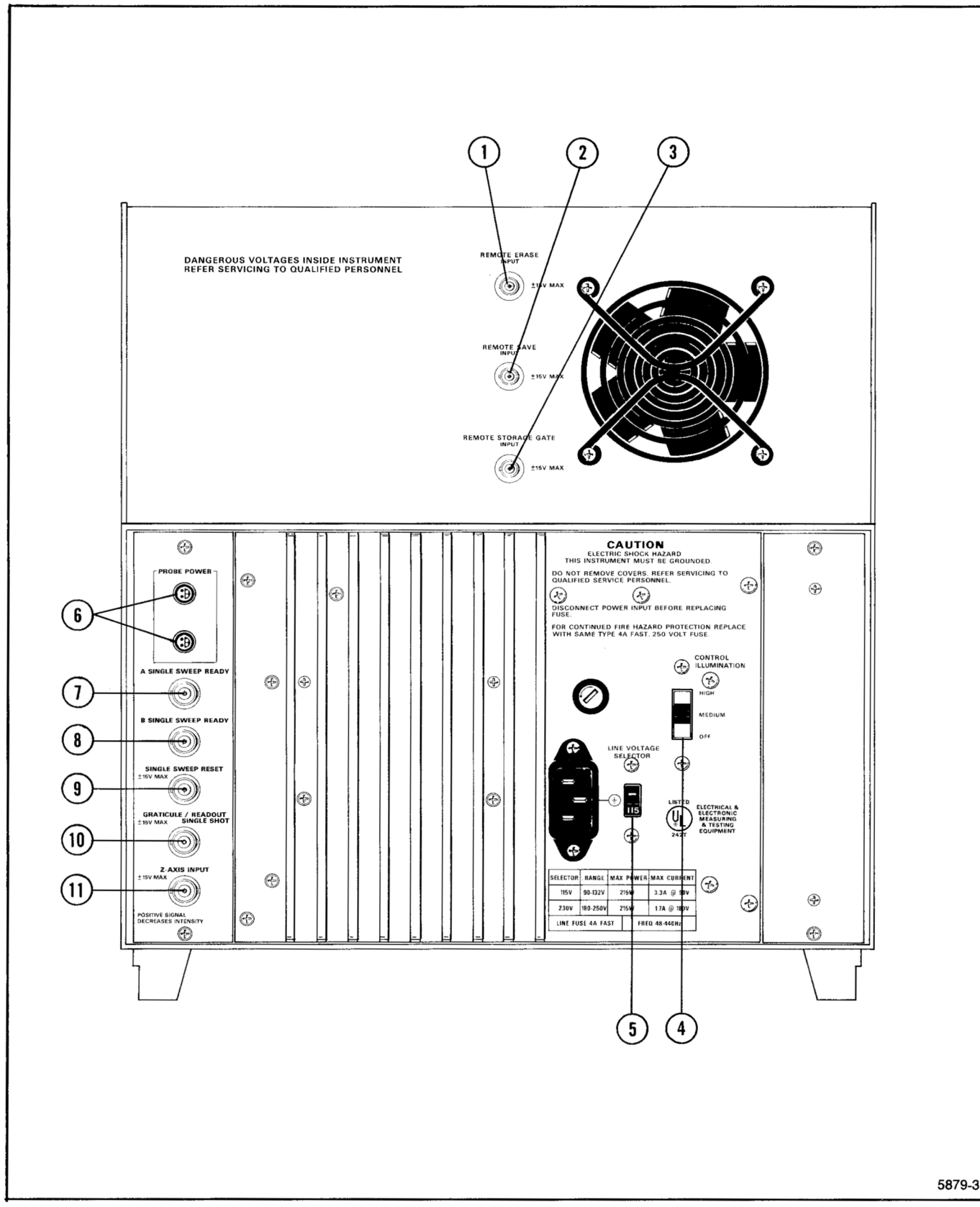

Fig. 2-2a. Rear-panel controls and connectors.

http://manoman.sqhill.com

REAR-PANEL CONTROLS AND CONNECTORS

(1) **REMOTE ERASE INPUT** — Allows external operation of the ERASE function.

(2) **REMOTE SAVE INPUT** — Allows external operation of the SAVE function.

(3) **REMOTE STORAGE GATE INPUT** — Allows external operation of the transfer function (FAST BISTABLE and FAST VAR PERSIST only).

(4) **CONTROL ILLUMINATION** — Sets illumination level of the indicators and the lighted pushbutton switches on the 7934 front panel and the associated plug-in units.

(5) **LINE VOLTAGE SELECTOR** — Sets instrument to 115-volt or 230-volt nominal line operation.

(6) **PROBE POWER (two connectors)** — Provides power to active probe system.

(7) **Z-AXIS INPUT** — Input for external intensity modulation of the crt display.

(8) **VERT SIG OUT** — Output signal derived from vertical signal as selected by the B TRIGGER SOURCE switch.

(9) **+SAWTOOTH OUT** — Sawtooth output signal derived from the A or B time-base unit.

(10) **+GATE OUT** — Output signal derived from the A Gate, B Gate, or the A Dely'd Gate.

(11) **REMOTE RESET IN** — Allows external single-sweep reset of time-base unit(s).

Fig. 2-2b. Rear-panel controls and connectors.

http://manoman.sqhill.com

1. Amplifier Unit (two required)

Description: Compatible with 7934 Oscilloscope. One dual-trace unit required to completely check vertical readout fields.

Type: Any compatible 7A-series units. Refer to Table 1-8 in the General Information Section for suitable units.

2. Time-Base Unit (two required)

Description: Compatible with 7934 Oscilloscope. One dual time-base or delaying time-base required to completely check horizontal readout fields.

Type: Any compatible 7B-series units. Refer to Table 1-9 in the General Information section for suitable units.

3. Sine-Wave Generator

Description: Frequency range, 250 kilohertz to 1 megahertz; output amplitude, two volts peak-to-peak into 50 ohms; waveform, sine wave.

Type: Tektronix SG 503 (requires TM 500 power module).

4. Cables (two required)

Description: Length, 42 inches; connectors, BNC.

Type: RG-58/U, 50-ohm coaxial, Tektronix Part 012-0057-01.

5. BNC T Connector

Description: Connectors, two BNC female, one BNC male.

Type: BNC "T" connector, Tektronix Part 103-0300-00.

6. Adapter

Description: Connectors, BNC female to BNC female.

Type: BNC female to BNC female adapter, Tektronix part 103-0028-00.

Preliminary Set Up

1. Set the front-panel controls as follows:

A INTENSITY	Counterclockwise
FOCUS	Midrange
B INTENSITY	Counterclockwise
READOUT	OFF
GRAT ILLUM	Counterclockwise
REDUCED SCAN	Button out
STORE OFF	Button in
POWER	Button out
CALIBRATOR	4 V
VERTICAL MODE	LEFT
A TRIGGER SOURCE	VERT MODE
HORIZONTAL MODE	A
VERT TRACE SEPARATION (B)	Midrange
B TRIGGER SOURCE	VERT MODE
Horizontal Selector (at rear of A HORIZ compartment)	Norm

2. Connect the 7934 to a power source that meets the voltage and frequency requirements. If the available line voltage is outside the limits of the LINE VOLTAGE SELECTOR switch setting (on rear panel), see Operating Power Information under Installation (General Information Section).

3. Install Tektronix 7A-Series amplifier units in the LEFT VERT and RIGHT VERT compartments. Install Tektronix 7B-Series time-base units in the A HORIZ and B HORIZ compartments.

4. Press the POWER switch to the on position (button in).

5. Set both time-base units to 1 millisecond/division and triggering to auto mode with ac coupling from the internal source.

6. Rotate the A INTENSITY control until the trace is at a desirable viewing level (near midrange). Position the trace as necessary for an on-screen display.

7. Connect the CALIBRATOR output to the input of the left amplifier unit with a 42-inch BNC cable.

8. Set the left amplifier unit deflection factor to display a signal amplitude of two divisions centered on the screen.

9. Set the A horizontal time-base triggering for a stable display.

http://manoman.sqhill.com

Display Focus

10. Rotate the FOCUS control and observe the square-wave display. Notice that the thickness of the trace varies as the FOCUS control is rotated. Set the FOCUS control for a well-defined trace. If a well-defined trace cannot be obtained, adjust the ASTIG screwdriver adjustment along with the FOCUS control for the best trace.

Trace Alignment

11. Disconnect the input signal. Use the left amplifier unit position control to align the trace with the center horizontal graticule line. If necessary set the TRACE ROTATION adjustment so the trace is parallel to the center graticule line.

Graticule Illumination

12. Rotate the GRAT ILLUM control throughout its range and notice that the graticule lines are illuminated as the control is turned clockwise.

Control Illumination

13. Set the rear-panel CONTROL ILLUMINATION switch to HIGH. Notice that the A INTENSITY indicator and the lighted pushbutton switches are illuminated. Sequentially press all of the HORIZONTAL MODE switch positions and notice the A and B INTENSITY lights; these lights indicate which intensity control is active. Set the CONTROL ILLUMINATION switch to the MEDIUM position. Observe that the selected intensity indicator and the lighted pushbutton switches on the plug-in units are dimmed. Set the CONTROL ILLUMINATION switch to OFF and notice that the selected intensity indicator and pushbutton switches are extinguished.

14. Set the rear-panel CONTROL ILLUMINATION switch to the HIGH position. Return the HORIZONTAL MODE switch to A.

Vertical Deflection System

15. Connect the 4 V CALIBRATOR output to the input connectors of both amplifier units with two 42-inch BNC cables and a BNC T connector. Set the deflection factor of the left amplifier unit to display about two divisions of signal on the screen.

16. Notice that the position control of only the left amplifier unit affects the vertical position of the displayed trace. Position the trace to the upper half of the graticule.

17. Set the VERTICAL MODE switch to RIGHT. Set the deflection factor of the right amplifier unit to display about two divisions of signal on the screen.

18. Notice that the position control of only the right amplifier unit affects the vertical position of the displayed trace. Position the trace to the lower half of the graticule.

19. Set the VERTICAL MODE switch to ALT. Notice that two traces are displayed on the screen. The top trace is produced by the left amplifier unit and the bottom trace is produced by the right amplifier unit; the sweep for both traces is produced by the A time-base unit. Set the sweep rate of the A time-base unit to 50 milliseconds/division; notice that the display alternates between the left and right amplifier plug-in units after each sweep. Turn the A time-base sweep rate switch throughout its range; notice that the display alternates between amplifier units at all sweep rates.

20. Set the VERTICAL MODE switch to CHOP. Turn the A time-base unit sweep rate switch throughout its range. Notice that a dual-trace display is presented at all sweep rates, and that both amplifier units are displayed by the A time-base unit on a time-sharing basis. Set the A time-base unit sweep rate switch to 0.5 millisecond/division.

21. Set the VERTICAL MODE switch to ADD. The display should be four divisions in amplitude. Notice that the position control of either amplifier unit moves the display. Set the VERTICAL MODE switch to LEFT.

Horizontal Deflection System

22. Notice that the position control of only the A time-base unit affects the horizontal position of the displayed trace. Position the start of the trace to the left graticule line with the A time-base unit position control.

23. Set the HORIZONTAL MODE switch to B. Advance the B INTENSITY control until the display becomes defocused. The defocused display indicates that the B INTENSITY control is set too high. Reduce the setting of the B INTENSITY control to obtain a bright, well-defined display.

24. Notice that only the B time-base unit position control affects the horizontal position of the displayed trace. Position the start of the trace to the left graticule line with the B time-base unit position control. Set the B time-base unit triggering controls for a stable display.

http://manoman.sqhill.com

25. Set the HORIZONTAL MODE switch to ALT. Two traces should be presented on the screen. If the traces overlap, adjust the VERT TRACE SEPARATION (B) control to position one trace to the bottom of the graticule area. Turn the sweep rate switches of both time-base units throughout their range. Observe that each time-base unit controls one of the traces independently of the other time-base unit. Also notice that when one of the time-base units is set to a slow sweep rate (below about 50 milliseconds/division), sweep alternation is evident (only one of the traces is presented on the screen at a time). Set the sweep rates of both time-base units to 0.5 millisecond/division. Adjust the A INTENSITY control; notice that it changes the intensity of the trace produced by the A time-base unit only. Likewise, the B INTENSITY control changes the intensity of the trace produced by the B time-base unit only. Return both intensity controls to desirable levels.

26. Set the HORIZONTAL MODE switch to CHOP. Notice that two traces are displayed on the screen in a manner similar to that of the ALT display. Turn the sweep rate switches of both time-base units throughout their ranges. Observe that two traces are displayed on the screen at all sweep rates. Also notice that when both time-base units are set to a slow sweep rate (50 milliseconds/division or slower), both traces are visible on the screen at the same time. Return the sweep rate switches of both time-base units to 0.5 millisecond/division.

27. Set the CALIBRATOR switch to 0.4 V. Set the VERTICAL MODE switch to CHOP. Four traces should be displayed on the screen. If not, adjust the position controls of the amplifier units and the VERT TRACE SEPARATION (B) control to position the four traces into view. Set the position controls of the plug-in units to identify which trace is produced from each plug-in unit (if amplifier units have the identify feature, it can be used to identify the traces). Set the A time-base unit for a sweep rate of 1 millisecond/division. Notice that the left-amplifier unit is displayed at the sweep rate of both the A and B time-base units and that the right-amplifier unit is also displayed at the sweep rate of both time-base units.

28. Set the HORIZONTAL MODE switch to ALT. Observe that the display is very similar to that obtained in the previous step. The main difference in this display is that the traces are now displayed alternately (noticeable only at slow sweep rates).

29. Set the VERTICAL MODE switch to ALT. Set the CALIBRATOR switch to 4 V. Notice that the trace produced by the left amplifier unit is displayed at the sweep rate of the B time-base unit and the trace produced by the right amplifier unit is displayed at the A time-base unit sweep rate. This feature is called slaved-alternate operation and is obtained only when the VERTICAL MODE switch is in the ALT position, the HORIZONTAL MODE switch is in either the ALT or the CHOP position, and the time-base units are in the independent mode.

Triggering

30. Set the VERTICAL MODE switch to LEFT and the HORIZONTAL MODE switch to A. Center the display on the screen with the left amplifier unit position control. Disconnect the input signal from the right amplifier unit input connector. Sequentially select all of the VERTICAL MODE switch positions. Notice that a stable display is obtained for all positions of the VERTICAL MODE switch (a straight line in RIGHT switch position).

31. Set the A TRIGGER SOURCE switch to LEFT VERT. Again, sequentially select all of the VERTICAL MODE switch positions. Notice that the display is again stable in all positions, as in the previous step, and that the LEFT VERT button is illuminated.

32. Set the A TRIGGER SOURCE switch to RIGHT VERT. Sequentially select all of the VERTICAL MODE switch positions and notice that a stable display cannot be obtained in any position (this is because there is no input signal connected to the right vertical unit). The RIGHT VERT button is illuminated. Return the A TRIGGER SOURCE switch to VERT MODE; notice that this button is illuminated.

33. The B TRIGGER SOURCE switch operates in a manner similar to the A TRIGGER SOURCE switch when the B time-base unit is selected to provide the display. Set the B TRIGGER SOURCE switch to VERT MODE, and the VERTICAL MODE switch to ALT.

34. Set the HORIZONTAL MODE switch to ALT or CHOP. Notice that this is the same display obtained in step 29 (slaved-alternate operation).

Readout

35. Turn the READOUT control clockwise until an alphanumeric display is visible within the top or bottom division of the screen. Change the deflection factor of the amplifier unit that is selected for display; notice that the readout display changes as the deflection factor is changed. Likewise, change the sweep rate of the time-base unit which is selected for display; notice that the readout display for the time-base unit changes as the sweep rate is changed.

36. Set the time-base unit for X10 magnification. Notice that the readout display changes to indicate the correct

http://manoman.sqhill.com

magnified sweep rate. If a readout-coded 10X probe is available for use with the amplifier unit, install it on the input connector of the right amplifier plug-in unit. Notice that the deflection factor indicated by the readout is increased by 10 times when the probe is added. Return the time-base unit to normal sweep operation and disconnect the probe.

37. Sequentially select all of the VERTICAL MODE and HORIZONTAL MODE switch positions. Notice that the readout from a particular plug-in occupies a specific location on the display area. If either of the vertical plug-in units is a dual-trace unit, notice that the readout for channel 2 appears within the lower division of the screen. Return the VERTICAL MODE switch to LEFT and the HORIZONTAL MODE switch to A. Set the READOUT control to OFF.

Beamfinder

38. Set the deflection factor of the left amplifier unit to 0.1 volt/division. Notice that a square-wave display is not visible, since the deflection exceeds the scan area of the crt.

39. Press the BEAMFINDER button; notice that the display is returned to the viewing area in compressed form while the BEAMFINDER is pressed. Release the BEAMFINDER and notice that the display again disappears from the viewing area.

40. With the BEAMFINDER button pushed in, increase the amplifier-unit deflection factor until the display is reduced to about two divisions vertically. Adjust the position control of the displayed amplifier unit to position the compressed display near the center of the graticule. Release the BEAMFINDER and notice that the display remains within the viewing area.

Calibrator

41. Connect the CALIBRATOR output to both the left and right vertical units with two BNC cables and a BNC T connector. The display amplitude should be approximately two divisions. If not, adjust the deflection factor accordingly.

42. Press the different CALIBRATOR buttons (labeled 4 V, 0.4 V, and 40 mV) and notice that the displayed signal changes accordingly (CALIBRATOR output must be terminated into more than a 100-kilohm load for stated output). When the CALIBRATOR output is terminated into 50 ohms, the output is one-tenth of the stated output. Disconnect the CALIBRATOR signal.

Z-Axis Input

43. If an external signal is available (two volts peak-to-peak minimum), the function of the Z-AXIS INPUT can be demonstrated. Connect the external signal to both the input connector of the displayed amplifier unit and the rear-panel Z-AXIS INPUT connector. Set the sweep rate of the displayed time-base unit to display about five cycles of the signal. Set the amplitude of the signal generator until intensity modulation is visible on the display (change the amplifier unit deflection factor as necessary to produce an on-screen display). The positive peaks of the waveform should be blanked out and the negative peaks intensified. Notice that the setting of the intensity controls determines the amount of intensity modulation that is visible. Disconnect the cables.

Storage Operation

44. Connect the CALIBRATOR output to the input connector of the left amplifier unit, press the 4 V button, and set the vertical deflection factor for a two-division display. Set the time-base unit triggering mode to single sweep and set the sweep rate for 0.5 millisecond/division.

45. Press the BISTABLE button and set the AUTO ERASE control fully counterclockwise into the detent position.

46. Press the ERASE button. The calibrator signal should be stored on the screen. If not, increase the A INTENSITY control slightly and press the ERASE button again. Repeat this sequence until a stored display is obtained.

47. Press the SAVE button. The signal stored in the previous step should remain on the screen; it may be necessary to adjust the SAVE INTENSITY control to view the display. Turn the SAVE INTENSITY control throughout its range and observe the effect on the display.

48. Press the ERASE button. Notice that the display cannot be erased (the SAVE mode inhibits the erase function). Press and release the SAVE button.

49. Set the STORAGE LEVEL and the PERSISTENCE controls fully counterclockwise. Press the VAR PERSIST button. Observe that an erase cycle and sweep occurs (when switching between the BISTABLE and VAR PERSIST modes) and that the screen goes dark except for the stored display.

http://manoman.sqhill.com

50. Slowly turn the PERSISTENCE control clockwise and notice that the stored display fades into the background (background lighting will be observed as the PERSISTENCE control is advanced clockwise). The PERSISTENCE control determines the time interval during which the stored display is retained in the VAR PERSIST mode. Set the PERSISTENCE control fully counterclockwise.

51. Press the ERASE button, then set the PERSISTENCE control to midrange just long enough for the display to fade out. Quickly turn the PERSISTENCE control fully counterclockwise. Slowly increase the STORAGE LEVEL (clockwise) and notice that the faded display again becomes visible, against the background.

52. Turn the PERSISTENCE, STORAGE LEVEL, and A INTENSITY controls fully counterclockwise and set the time-base unit for auto triggering at a sweep rate of 0.5 second/division.

53. Set the PERSISTENCE control to midrange and slowly increase the A INTENSITY (clockwise) until the trace appears. Vary the PERSISTENCE control setting and notice that the trace can be made to build up or fade more quickly, depending on the control setting. Varying the A INTENSITY control also affects the display in the same manner. Return the PERSISTENCE control to midrange and slowly decrease the A INTENSITY control to the point where the trace is just extinguished; then set the STORAGE LEVEL control fully clockwise and notice that the trace becomes visible again.

54. Turn the PERSISTENCE, STORAGE LEVEL, and A INTENSITY controls fully counterclockwise and set the time-base unit for auto triggering at a sweep rate of 0.5 millisecond/division.

55. Press the FAST BISTABLE button.

56. Press the ERASE button and notice that the screen background appears to alternate between bright and dim. This indicates that the sweep and transfer functions are operating.

57. Set the MULTI TRACE DELAY control fully clockwise; then, slowly increase the A INTENSITY control (clockwise) until the display stores. Notice that each sweep is stored without erasing the previously stored sweep. This is easily observed if the vertical position control is varied between sweeps.

58. Press the ERASE button and notice that the display is erased.

59. Set the time-base unit for single sweep and press the ERASE button. Notice that only one sweep is stored (trigger time-base unit if necessary).

60. Change the setting of the vertical position control and initiate another sweep by pressing the reset button on the time-base unit. Notice that the new sweep is stored along with the one stored in the previous step.

61. Alternately press the ERASE button and reduce the A INTENSITY control to the point where the display just fails to store.

62. Alternately increase the STORAGE LEVEL (clockwise) and press the ERASE button. Notice that as the STORAGE LEVEL is increased, the display begins to store.

63. The FAST VAR PERSIST mode operates as outlined for the VAR PERSIST mode except that the sweep and transfer functions are operative as described for FAST BISTABLE operation.

64. Press the BISTABLE button. Set the time-base unit for auto triggering.

65. Set the A INTENSITY control to the one o'clock position. Turn the AUTO ERASE control out of the detent position and notice that the erase cycles occur automatically and with increasing frequency as the control is turned clockwise.

66. Return the ERASE control to the detent (OFF) position and set the time-base unit for single sweep and external triggering. Turn the SAVE INTENSITY control fully counterclockwise.

67. Press the ERASE button; notice that no sweep occurs.

68. Press the SAVE button; notice that no sweep occurs (this is the "Auto Save" mode). Since no trigger was available, the sweep did not run; therefore, the system waits in a ready-to-store mode.

http://manoman.sqhill.com

69. Set the time-base unit to internal trigger and notice that the screen goes dark. This indicates that a sweep has occurred and that the system has entered the SAVE mode.

70. Turn the SAVE INTENSITY control clockwise and notice that the stored display becomes visible.

71. Press the STORE OFF button and set the time-base unit for auto triggering.

This completes the Operator's Checkout Procedure for the 7934.

DETAILED OPERATING INFORMATION

Graticule

The graticule is marked on the inside of the crt faceplate, providing accurate, parallax-free measurements. The graticule is divided into eight vertical and ten horizontal divisions. Each full scan division is 0.9- centimeter square divided into five minor divisions along each axis. A reduced scan graticule is etched in the center of the full scan graticule. Each reduced scan division is exactly one-half of a full scan division (0.45 centimeter). The vertical gain and horizontal timing of the plug-in units are calibrated to the graticule so that accurate measurements can be made from the crt in either full or reduced scan mode. The illumination of the graticule lines can be varied with the GRAT ILLUM control.

Figure 2-3 shows the graticule and defines the various measurement lines. The terminology defined here will be used in all discussions involving measurements from the graticule. The 0%, 10, 90, and 100 markings on the left side of the graticule are provided to facilitate rise-time measurements.

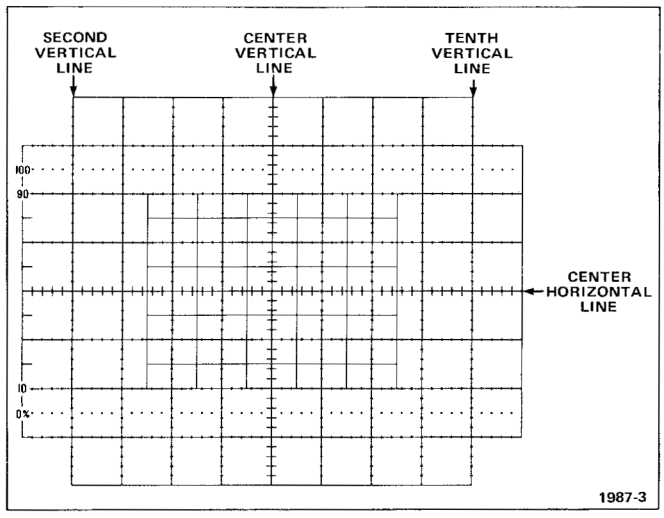

Figure 2-3. Definition of graticule measurement lines.

Light Filter

The tinted crt face-plate filter minimizes light reflections from the face of the crt to improve contrast when viewing the display under high-ambient-light conditions. This filter may be removed for waveform photographs or for viewing high-writing-rate displays. To remove the filter, pull outward on the bottom of the plastic crt mask and remove it from the crt bezel. Remove the tinted filter; leave the clear plastic face-plate protector installed and replace the mask. The face-plate protector should be left in place at all times to protect the crt face plate from scratches, and to protect the operator from crt implosion.

WARNING

Do not remove the clear plastic implosion shield covering the crt face plate; the crt implosion shield provides protection to the operator from crt implosion.

An optional mesh filter is available from Tektronix (included with Option 03). This filter provides shielding against radiated electromagnetic interference from the face of the crt. It also serves as a light filter to make the trace more visible under high-ambient-light conditions. The mesh filter fits in place of the plastic tinted filter. Order the mesh filter by Tektronix Part 378-0603-00.

Control Illumination

The rear-panel CONTROL ILLUMINATION switch sets the illumination level of the A and B INTENSITY indicators, the A and B TRIGGER SOURCE switches, and the lighted pushbutton switches on the plug-in units. The positions available are OFF, MEDIUM, and HIGH. The CONTROL ILLUMINATION switch does not affect the function-indicator lights on plug-in units (such as triggered or single-sweep ready lights).

Intensity Controls

The A INTENSITY control determines the brightness of the display produced by the plug-in unit installed in the A HORIZ compartment; the B INTENSITY control determines the brightness of the display produced by the plug-in unit installed in the B HORIZ compartment. The READOUT intensity control affects the brightness of only the readout portion of the crt display.

CAUTION

Crt damage can occur under high-intensity conditions. Avoid any condition where an extremely bright, sharply-focused dot exists on the crt. Also, remember that the light filter reduces the apparent light output from the crt.

http://manoman.sqhill.com

The beam current is limited during X-Y mode operation or when either, or both, time-base units being displayed are set for a slow sweep rate. This reduces the danger of damaging the crt with a stationary or slowly moving spot.

Display Focus

This instrument contains an automatic-focusing circuit which maintains optimum focus for all intensity levels after a correct setting of the FOCUS control is established. The easiest way to obtain the correct setting of the FOCUS control is to set the READOUT intensity control so that the readout portion of the display is clearly visible. Then adjust the FOCUS control for best definition of the readout display.

Astigmatism and Focus Adjustments

If a well-defined display cannot be obtained with the FOCUS control, set the ASTIG adjustment as follows:

NOTE

To check for proper setting of the ASTIG adjustment, slowly turn the FOCUS control through the optimum setting. If the ASTIG adjustment is correctly set, the vertical and horizontal portions of the display will come into focus at the same position of the FOCUS control. This setting of the ASTIG adjustment should be correct for any display.

1. Install an amplifier unit in the LEFT VERT compartment and a time-base unit in the A HORIZ compartment.

2. Set the VERTICAL MODE switch to LEFT and the HORIZONTAL MODE switch to A.

3. Connect the output of a sine-wave generator to the input of the amplifier unit. Set the sine-wave generator repetition rate to 1 kilohertz and the vertical amplifier deflection factor for a two-division display.

4. Set the time-base unit sweep rate for 0.2 millisecond/division and the triggering for a stable display. Set the A INTENSITY control so the display is at a usable intensity level (about midrange).

5. Turn the FOCUS control fully counterclockwise and set the ASTIG adjustment to midrange.

6. Set the FOCUS control so the thickness of the sine-wave trace is as thin as possible.

7. Adjust the ASTIG adjustment so the width of the sine-wave trace is as thin as possible.

8. Repeat steps 6 and 7 for the best overall focus

Beamfinder

The BEAMFINDER helps locate a display that overscans the crt viewing area vertically and/or horizontally. When the BEAMFINDER button is pressed, the display is compressed and defocused within the graticule area. To locate and reposition an overscanned display, use the following procedure:

1. Press the BEAMFINDER button. While the display is compressed, change the vertical and horizontal deflection factors until the vertical deflection is about two divisions high and the horizontal deflection is about four divisions wide (the horizontal deflection needs to be reduced only when operating in an X-Y mode).

2. Adjust the vertical and horizontal position controls to center the display on the graticule.

3. Release the BEAMFINDER button; the display should remain within the graticule area.

Trace Alignment

The TRACE ROTATION adjustment allows the trace to be aligned with the horizontal graticule lines. To set trace alignment, set the amplifier unit input coupling to ground. Then, position the trace to the center horizotal line and adjust the TRACE ROTATION adjustment so that the trace is parallel with the center horizontal graticule line.

Readout Display

The Readout System provides an alpha-numeric display of information on the crt along with the analog waveform display. The information displayed by the Readout System is obtained from the plug-in units installed in the plug-in compartments.

The readout information from each channel of each plug-in unit is called a word. Up to eight words of readout information can be displayed on the crt (two channels from each of the four plug-in compartments). The location of each readout word is fixed and is directly related to the plug-in unit and channel from which it originated. Figure 2-4 shows the area of the graticule where the readout from each plug-in unit and/or channel is displayed. Notice that the readout from channel 1 of each plug-in unit is displayed in the top division of the graticule and the readout from channel 2 is displayed directly below in the bottom division of the graticule.

http://manoman.sqhill.com

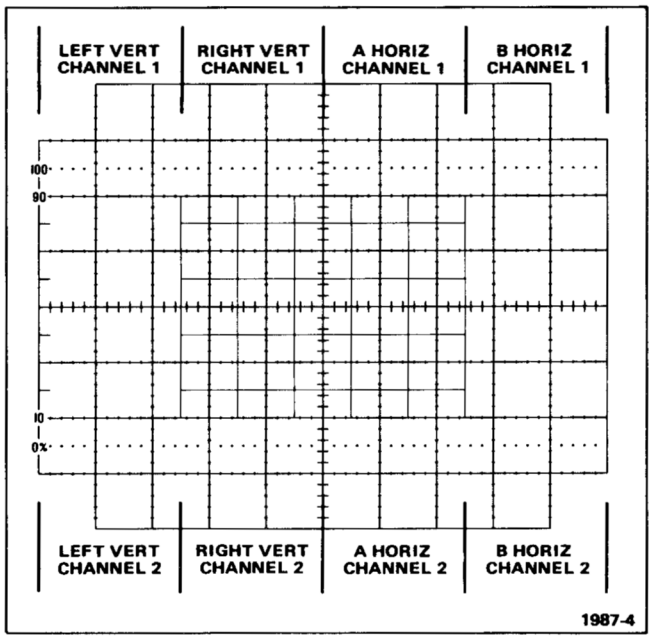

Figure 2-4. Location of readout on the crt identifying the originating plug-in and channel.

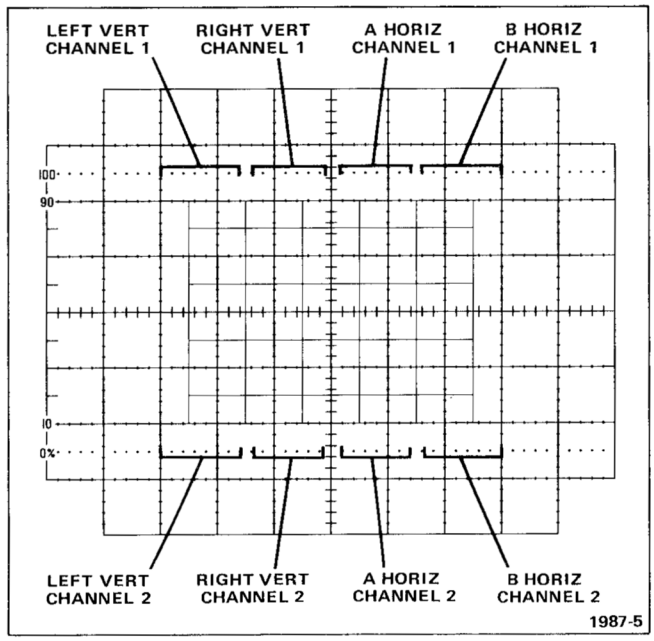

Figure 2-5. Location of readout on the crt when reduced scan is selected.

The reduced scan mode changes the location of the readout display. Figure 2-5 shows the correct readout location for the reduced scan mode. Notice that the readout display is positioned outside the half-size inner graticule and that the location of the readout words is directly related to the plug-in unit and channel from which they originated.

Usually, the readout information for plug-in units and/or channels, which are selected by the mode switches, appear in the readout display. (Some special purpose plug-in units may over-ride the mode switches to display readout even though the compartment is not selected for display.)

Readout Identify

An identify feature is provided by the Readout System to correlate the readout word with the originating plug-in unit and channel (amplifier units only). When the "identify" button of an amplifier unit is pressed, the word IDENTIFY appears in the readout location allocated to that plug-in and channel. Other readout words in the display remain unchanged. When the "identify" button is released, the readout display from this plug-in channel is again displayed. Circuitry may also be provided in the amplifier unit to produce a noticeable change in the analog waveform display to identify the associated trace when the identify button is pressed (see the plug-in unit instruction manual for details).

Readout Intensity

The READOUT control determines the intensity of only the readout portion of the display, independently of the traces. The Readout System is inoperative when the READOUT control is in the fully counterclockwise OFF position. This may be desirable when the top and bottom divisions of the graticule are to be used for waveform display, or when the trace interruptions necessary to display characters interfere with the waveform display.

Readout Modes

The READOUT intensity control determines the operating mode of the Readout System. With the READOUT intensity control set in the variable area, the Readout System operates continuously, interrupting the crt display at random (for about 20 microseconds) in order to write each character on the crt. In the PULSED position, the Readout System operates in a triggered mode; one complete frame (up to eight words) of readout is displayed after the displayed time-base unit completes each sweep of the crt. Brightness of the readout display when operating in the PULSED mode is set by the READOUT PRESET adjustment.

Readout Operation With Storage

Each of the storage modes modify the operation of the Readout System to some extent.

Normal Readout Mode. With the READOUT control set in the variable area, the Readout System operates as follows:

http://manoman.sqhill.com

BISTABLE and VAR PERSIST. In the BISTABLE and VAR PERSIST storage modes, the readout display is turned off during the storage erase cycle; otherwise, the Readout System operates as previously described under Readout Modes.

FAST BISTABLE and FAST VAR PERSIST. In the FAST BISTABLE and FAST VAR PERSIST storage modes, the Readout System turns off at the beginning of an erase cycle or when the single-sweep time-base mode is reset and remains off until the end of the storage transfer cycle. In addition, the Readout System is held off whenever the MULTI TRACE DELAY control is in operation (out of its detent position) and the displayed time-base unit is in a repetitive sweep mode.

Pulsed Readout Mode. With the READOUT control set to PULSED, the Readout System operates as follows:

BISTABLE. In the BISTABLE storage mode, the readout display runs continuously; however, the Readout System turns off when the storage erase cycle begins and remains off until the end of the first displayed sweep.

VAR PERSIST. In the VAR PERSIST storage mode one complete frame of readout is displayed after the displayed time-base unit completes each sweep; however, there is no readout display during a storage erase cycle.

FAST BISTABLE. In the FAST BISTABLE storage mode the readout display runs continuously (as in the normal mode); however, the Readout System turns off at the beginning of each erase cycle or when the single sweep time-base mode is reset and remains off until the end of the storage transfer cycle. In addition, the Readout System is held off whenever the MULTI TRACE DELAY control is in operation (out of its detent position) and the displayed time-base unit is in a repetitive sweep mode.

FAST VAR PERSIST. In the FAST VAR PERSIST storage mode, one complete frame of readout is displayed after the completion of the storage transfer cycle. However, there is no readout during the storage erase cycle and there is no readout when the MULTI TRACE DELAY control is out of the detent position and the displayed time-base unit is in a repetitive sweep mode.

Readout With Save Storage Mode. When the SAVE storage mode is used, operation of the Readout System changes from that previously described. (Refer to the SAVE mode discussion, in this manual, for information on SAVE storage mode operation.)

Save With Normal Readout. With the READOUT control set in the variable area and any of the storage modes selected, the Readout System turns off approximately one second after the storage system enters the SAVE mode.

Save With Pulsed Readout. With the READOUT control set to PULSED and the storage mode switch set to BISTABLE or FAST BISTABLE, the readout is displayed for approximately one second after the storage system enters the SAVE mode; then it turns off. With the READOUT control set to PULSED and the storage mode switch set to VAR PERSIST, one complete frame of readout is displayed at the end of the displayed sweep. With the READOUT control set to PULSED and the storage mode switch set to FAST VAR PERSIST, one frame of readout is displayed at the end of the storage transfer cycle, or whenever the storage system is set to the SAVE mode and the MULTI TRACE DELAY control is out of its detent position.

Reduced Scan Mode

The reduced scan mode increases the stored writing speed. The calibrated graticule division is reduced to 0.45 centimeters in the reduced scan mode. Calibrated measurements are confined to the inner half-size 8 x 10 graticule area. The operation of the instrument controls do not change from their operation in the full scan mode.

Storage Display

The 7934 Storage Oscilloscope has four selectable storage modes. Listed in order of increasing writing speed, they are: BISTABLE, VAR PERSIST, FAST BISTABLE, and FAST VAR PERSIST. In each mode the viewed image is stored on the storage target located in the front of the crt.

Bistable Storage. In the BISTABLE mode the luminance of any point on the storage target takes on one of two discrete levels, either written or unwritten. In this mode, only the A or B INTENSITY controls affect the stored writing speed; writing speed is quite low but the stored view time is indefinitely long.

Variable Persistence Storage. In the VAR PERSIST mode, points on the storage target can vary in luminance between totally dark and very bright. In this mode, writing speed is greater than in the BISTABLE mode, but the stored display is essentially unstable, or continuously fading away. The rate of fading is adjusted by the PERSISTENCE control. The VAR PERSIST storage mode is particularly useful for viewing high-speed repetitive signals with low repetition rates. The PERSISTENCE control can be adjusted in conjunction with the STORAGE LEVEL and INTENSITY controls, to produce a steady, bright trace. Writing speed is varied in this mode by the STORAGE LEVEL control as well

http://manoman.sqhill.com

as the crt INTENSITY controls. Maximum stored writing speed is achieved by setting the INTENSITY controls and the STORAGE LEVEL control fully clockwise.

Fast Storage. The 7934 crt has a special high-speed target, known as the fast target, located just behind the storage target. The fast target has an extremely high writing speed but retains images for only a fraction of a second. For this reason images stored on the fast target are quickly and automatically transferred to the storage target; this operation is called transfer storage. Transfer storage can be used with the storage target operating in either bistable or variable persistence mode, resulting in the FAST BISTABLE and FAST VAR PERSIST modes.

In either of the FAST modes the writing speed is adjusted by the STORAGE LEVEL control as well as the crt INTENSITY controls. Maximum stored writing speed in both FAST storage modes is attained by setting the STORAGE LEVEL and INTENSITY controls fully clockwise.

Erase. In all storage modes, an erase cycle removes any previous display from the storage target. This prepares the storage and fast targets (in the FAST storage modes) to receive the next waveform. Erase cycles are initiated by pressing the ERASE button, grounding the rear-panel REMOTE ERASE INPUT, or by rotating the AUTO ERASE control out of the OFF (detent) position. The AUTO ERASE control can be set to erase the storage display in 1- to-10-second intervals.

WARNING

Electric-shock hazard. Only qualified service personnel should internally modify the operation of the instrument.

Two modes of operation are available for the AUTO ERASE function, either Erase After Sweep or Periodic Erase (selection jumper located behind right side panel; refer selection of mode to qualified personnel only). The two modes differ in the following ways: The Erase After Sweep mode requires that the displayed time-base unit complete a sweep in order to initiate the delay interval prior to the erasure; the Periodic Erase mode repetitively erases independent of the displayed time-base operation. The 7934 is set to the Erase After Sweep mode at the factory.

Both time-base units and the readout system are inhibited during the erase cycle. Also during each erase cycle, the displayed time-base unit is reset if it is in single-sweep mode. (The other time base will also be reset at this time if it is also in single-sweep mode.) In the BISTABLE and VAR PERSIST storage modes, the erase cycle takes approximately 1.4 seconds. The additional time is required for preparing the fast target.

In all storage modes the time-base unit(s) is free to run immediately following an erase cycle. However, in FAST BISTABLE or FAST VAR PERSIST storage modes, the time-base unit(s) is locked out immediately after the first sweep occurs, so that transfer can occur. (In the ALT or CHOP horizontal modes, both time-base units are allowed to run once before transfer occurs.) If the time-base unit(s) is set for single-sweep operation, it remains locked out indefinitely after transfer occurs. The operator can initiate a cycle, however, called the multi-trace cycle, which causes another trace to be stored without erasing the initial display. This is accomplished by pressing the single-sweep-reset button on the time-base unit(s), or by grounding the REMOTE RESET INPUT on the 7934 rear panel. When this is done the storage system initiates a cycle, lasting approximately 600 milliseconds, which prepares the fast target to store another display and sends an additional single-sweep-reset command to the time-base unit(s). After the multi-trace cycle, the time-base unit(s) can again sweep once, after which it is again locked out and the transfer function occurs.

When the time-base unit(s) is operated in other than a single-sweep mode, the multi-trace cycle is controlled by the MULTI TRACE DELAY control. If the MULTI TRACE DELAY control is set to its detent position, operation is as previously described for the single-sweep mode. If the MULTI TRACE DELAY control is out of the detent position, the multi-trace cycle is triggered automatically following the transfer cycle. The length of the cycle can be varied by the MULTI TRACE DELAY control over a range from approximately 600 milliseconds to more than four seconds.

Save Mode. The SAVE mode can be entered from any storage mode by pressing the SAVE button or by grounding the rear-panel REMOTE SAVE INPUT. The indicator next to the SAVE button illuminates when the SAVE mode is activated. When in the SAVE mode, the time-base unit(s) and readout system are inhibited and the display cannot be erased. The SAVE INTENSITY control adjusts the intensity of the saved display. Minimum intensity provides the greatest viewing time in the VAR PERSIST and FAST VAR PERSIST modes; and although the view time of the BISTABLE and FAST BISTABLE storage modes is very long without the use of the SAVE mode, the SAVE mode simplifies photography by allowing the operator to control the intensity of the stored display.

The SAVE mode can be selected with or without a stored display present. If it is selected after an erase cycle and before a sweep has occurred (no stored display), the display waits in the STORE mode until a sweep occurs, at which time the display automatically enters the SAVE mode. (This is referred to as the Auto Save mode.)

http://manoman.sqhill.com

Care of Storage Screen

The following precautions will prolong the useful storage life of the crt in this instrument:

1. Use minimum beam intensity to produce a clear, well-defined display.

2. Use minimum SAVE INTENSITY when storing images for extended periods of time.

3. Avoid repeated use of the same area of the screen. If a particular display is to be stored repeatedly, change the vertical position occasionally to use other portions of the display area.

Vertical and Horizontal Mode Combinations

There are 20 possible combinations of VERTICAL MODE and HORIZONTAL MODE switch settings. The total possible number of display combinations is further multiplied by the variety of plug-in units available for use with this instrument, the interchangeability of plug-ins (e.g., either an amplifier or a time-base unit can be installed in any compartment), and by the capabilities of the plug-in units which are used in the instrument (e.g., a dual-trace amplifier unit can be used in either of the two single-channel modes, in the dual-trace mode, or added-algebraically mode; a delaying time base may be used either for a normal sweep or for delayed sweep). Therefore, it is difficult to list all of the display combinations which can occur during use of the 7934 and available plug-in units. Table 2-1 lists the combination of VERTICAL MODE and HORIZONTAL MODE switch positions available and the type of display obtained with each combination.

Vertical Modes

Left or Right. When the LEFT or RIGHT button of the VERTICAL MODE switch is pressed, only the signal from the plug-in unit in the selected compartment is displayed.

Alternate Mode. The ALT position of the VERTICAL MODE switch produces a display which alternates between the LEFT VERT and RIGHT VERT compartments with each sweep of the crt. Although the ALT mode can be used at all sweep rates, the CHOP mode provides a more satisfactory

Table 2-1
DISPLAY COMBINATIONS*

Vertical Mode	Horizontal Mode	Comments
LEFT	A or B	One trace. Vertical deflection from single unit; horizontal deflection from single unit.
	ALT or CHOP	Two traces. Vertical deflection from single unit; horizontal deflection from both units.
ALT	A or B	Two traces. Vertical deflection from both units; horizontal deflection from single unit.
	ALT or CHOP	Two traces. Vertical deflection from both units; horizontal deflection from both units. Independent-pairs (sweep slaving) operation, see Alternate Mode discussion in this section.
ADD	A or B	One trace. Vertical deflection is algebraic summation of signals from both units; horizontal deflection from single unit.
	ALT or CHOP	Two traces. Vertical deflection is algebraic summation of signals from both units; horizontal deflection from both horizontal compartments.
CHOP	A or B	Two traces. Vertical deflection from both units; horizontal deflection from single unit.
	ALT or CHOP	Four traces. Vertical deflection from both units; horizontal deflection from both units.
RIGHT	A or B	One trace. Vertical deflection from single unit; horizontal deflection from single unit.
	ALT or CHOP	Two traces. Vertical deflection from single unit; horizontal deflection from both units.

***Combinations given for single-channel vertical and horizontal units only.**

http://manoman.sqhill.com

display at sweep rates below about 20 milliseconds/division. At these slower rates, alternate-mode switching becomes perceptible.

Alternate Mode displays have three types of triggering available. When the A and B TRIGGER SOURCE switches are set to the VERT MODE positions, each sweep is triggered by the signal being displayed on the crt. This provides a stable display of two unrelated signals, but does not indicate the time relationship between the signals. In either the LEFT VERT or RIGHT VERT positions of the TRIGGER SOURCE switches, the two signals are displayed showing true time relationship. However, if the signals are not time related, the display from the plug-in that is not providing a trigger signal will be unstable on the crt.

When the ALT vertical mode is selected and either the ALT or CHOP button of the HORIZONTAL MODE switch is selected, the instrument operates in the slaved-alternate mode. Under this condition, the signal from the LEFT VERT unit is always displayed at the sweep rate of the B HORIZ time-base unit, and the signal from the RIGHT VERT unit is displayed at the sweep rate of the A HORIZ time-base unit (non-delayed sweep only). This results in two displays that are completely independent as to vertical deflection and sweep rate. This display is equivalent to the display obtainable with a dual-beam oscilloscope for most repetitive-display combinations.

If delayed-sweep operation is used with this mode, a different sequence is displayed. First the LEFT VERT unit is displayed at the sweep rate of the A HORIZ time-base unit (delaying sweep) and then at the sweep rate of the B HORIZ time-base unit (delayed sweep). The vertical display then shifts to the RIGHT VERT unit and its signal is displayed consecutively at the delaying and delayed sweep rates.

Chopped Mode. The CHOP position of the VERTICAL MODE switch produces a display which is electronically switched between channels at about a one-megahertz rate. In general, the CHOP mode provides the best display at sweep rates slower than about 20 milliseconds/division or whenever dual-trace, single-shot phenomena are to be displayed. At faster sweep rates the chopped switching becomes apparent and may interfere with the display.

When the A or B TRIGGER SOURCE switches are set to VERT MODE, internal trigger signals from the vertical plug-ins are algebraically added and the time-base units are triggered from the resultant signal. In the LEFT VERT or RIGHT VERT trigger-source positions, the trigger signal to the time-base units is a sample of the internal trigger signal from the selected vertical unit only. This allows two time-related signals to be displayed showing true time relationship. (If the signals are not time-related, the display from the channel that is not providing the trigger signal will appear unstable.)

The CHOP mode can be used to compare two single-shot, transient, or random signals that occur within the time interval determined by the time-base unit (ten times selected sweep rate). To provide correct triggering, the displayed signal which provides the trigger signal must precede the second display in time. Since the signals show true time relationship, time-difference measurements can be made from the display.

Algebraic Addition. The ADD position of the VERTICAL MODE switch can be used to display the sum or difference of two signals, for common-mode rejection to remove an undesired signal, or for dc offset (applying a dc voltage to one channel to offset the dc component of a signal on the other channel). The common-mode rejection ratio between the vertical plug-in compartments is at least 100:1 from dc to 150 megahertz. The rejection ratio decreases to 30:1 from 150 to 500 megahertz.

The overall deflection on the crt in the ADD mode is the algebraic sum of the signals from the two vertical plug-in units. It is difficult to determine the voltage amplitude of the resultant display unless the amplitude of the signal applied to one of the plug-ins is known. This is particularly true when the vertical units are set to different deflection factors, since it is not obvious which portion of the display results from the signal applied to a given plug-in unit. The polarity and repetition rate of the applied signals also affect the ADD display.

The following precautions should be observed when using the ADD mode:

1. Do not exceed the input-voltage ratings of the plug-in units.

2. Do not apply large signals to the plug-in inputs. A good rule is to not apply a signal of more than about eight times the vertical deflection factor. For example, with a vertical deflection factor of 0.5 volts/division, the voltage applied to that plug-in should not exceed four volts. Larger voltages may result in a distorted display.

3. To ensure the greatest dynamic range in the ADD mode, set the position controls of the plug-in units to a setting which would result in a mid-screen display if viewed in the LEFT or RIGHT positions of the VERTICAL MODE switch.

4. For similar response from each channel, use identical plug-ins and set the plug-in units for the same input coupling mode.

http://manoman.sqhill.com

Horizontal Modes

A or B. When either the A or B button of the HORIZONTAL MODE switch is pressed, the signal is displayed at the sweep rate of the selected time-base unit. Set the applicable intensity control and trigger-source switch for the desired display.

Alternate Mode. The ALT position of the HORIZONTAL MODE switch provides crt sweeps derived alternately from the two time-base units. Although the ALT horizontal mode can be used at all sweep rates, the CHOP mode provides a more satisfactory display at sweep rates below about 20 milliseconds/division. At slower sweep rates, the switching between the alternate-mode traces becomes apparent and may interfere with correct analysis of the display.

NOTE

This instrument will not operate in the ALT position of the HORIZONTAL MODE switch if either horizontal plug-in compartment is left vacant.

The A and B INTENSITY controls allow individual adjustment of the traces produced by the time-base units in the A HORIZ and B HORIZ compartments. Correct triggering of both time-base units is essential in obtaining the correct display in the ALT horizontal mode. If either of the time-base units does not receive a correct trigger, and therefore does not produce a sweep, the other unit cannot produce a sweep either. This means that one time-base unit cannot begin its sweep until the previous unit has completed its entire display. This can be avoided if the time-base units are set for auto-mode triggering (sweep free runs if not correctly triggered). See Trigger Source for operation of the A and B TRIGGER SOURCE switches. Also, see Vertical Trace Separation for information on positioning the B HORIZ display when in the ALT dual-sweep mode.

Chopped Mode. When the CHOP button of the HORIZONTAL MODE switch is pressed, the display is electronically switched between the two time-base units at about a 200-kilohertz rate. In general, the CHOP horizontal mode provides the best display when either of the time-base units is set to a sweep rate slower than about 20 milliseconds/division. It also provides the best display when the two time-base units are set to widely differing sweep rates. In the CHOP horizontal mode, equal time segments are displayed from each of the time-base units. This provides a display which does not change greatly in intensity as the sweep rate of either time-base unit is reduced (in contrast to ALT horizontal mode operation where the slowest trace tends to be the brightest).

The A and B INTENSITY controls allow individual adjustment of the intensity of the traces produced by the time-base units in the A HORIZ and B HORIZ compartments. Triggering is not as critical in the CHOP horizontal mode as in ALT; if one of the units is not triggered properly, only the trace from the untriggered time-base unit is missing from the display. The other trace is presented in the normal manner. See Trigger Source and Vertical Trace Separation for information on positioning the trace produced by the B HORIZ unit in relation to the trace from the A HORIZ unit.

Horizontal Selection. The Horizontal Selector switch (located behind the metal shield at the rear of the A HORIZ compartment) provides a means to override the HORIZONTAL MODE switch in selecting the horizontal compartment for deflection. The Horizontal Selector switch has three positions (Normal, A, and B). In Normal the operation of the HORIZONTAL MODE switch is unchanged. In A or B the plug-in compartment selected by the Horizontal Selector switch provides the signal for horizontal deflection. The plug-in compartment selected by the HORIZONTAL MODE switch provides the other control signals, such as unblanking, storage control, etc. The Horizontal Selector switch is set to Normal at the factory.

The Horizontal Selector switch provides a method of storing X-Y displays using the FAST BISTABLE or FAST VAR PERSIST storage modes. These storage modes require control signals provided by a time-base unit or an external input signal (see Remote Storage Gate Input), to develop a stored display. For X-Y storage, the Horizontal Selector switch can be set to display the signal from an amplifier unit installed in one of the horizontal compartments. The HORIZONTAL MODE switch can then select the other horizontal compartment with a time-base unit installed, allowing the storage circuitry and crt unblanking to be controlled by the time-base unit while the horizontal deflection is provided by the amplifier unit.

Vertical Trace Separation

When one of the dual-sweep horizontal modes is selected, the VERT TRACE SEPARATION (B) control allows the trace produced by the B HORIZ sweep to be positioned above or below the trace produced by the A HORIZ sweep. To use this control, first position the trace produced by the A HORIZ plug-in unit with the vertical position control. Then adjust the VERT TRACE SEPARATION (B) control to move the trace produced by the B HORIZ plug-in unit away from the A HORIZ display. If both waveforms are larger than four divisions in amplitude, the displays can only be positioned so they do not directly overlap since each waveform cannot be positioned to a unique area of the crt.

Trigger Source

The A and B TRIGGER SOURCE switches select the internal trigger signals for the A HORIZ and B HORIZ time-base units. For most applications, these switches can be left

http://manoman.sqhill.com

in the VERT MODE position. This position is the most convenient since the internal trigger signal is automatically switched as the VERTICAL MODE switch is changed or as the display is electronically switched between the LEFT VERT and RIGHT VERT plug-ins in the ALT position of the VERTICAL MODE switch. It also provides a usable trigger signal in the ADD position of the VERTICAL MODE switch, since the internal trigger signal in these modes is the algebraic sum of the signals applied to the vertical plug-in units. In the CHOP position, the left vertical plug-in is the trigger source. Therefore, the VERT MODE position ensures that the time-base units receive a trigger signal regardless of the VERTICAL MODE switch setting without the need to change the trigger source selection.

If correct triggering for the desired display is not obtained in the VERT MODE position, the trigger source for either the A HORIZ or B HORIZ time-base unit can be changed to obtain the trigger signal from either the LEFT VERT or RIGHT VERT plug-in. The internal trigger signal is obtained from the selected vertical compartment whether the plug-in in that compartment is selected for display on the crt or not. If the internal trigger signal is obtained from one of the vertical units but the other vertical unit is selected for display, the internal trigger signal must be time-related to the displayed signal in order to obtain a triggered (stable) display.

Calibrator Output

The CALIBRATOR provides a convenient signal for checking basic vertical gain and sweep timing. The calibrator signal is also very useful for adjusting probe compensation as described in probe instruction manuals. In addition, the calibrator can be used as a convenient signal source for application to external equipment.

Voltage. The CALIBRATOR provides accurate output voltages of 40 millivolts, 0.4 volt, and 4 volts into high-impedance loads. In addition, it provides 4 millivolts, 40 millivolts, and 0.4 volt into 50-ohm loads.

Current. The optional current loop accessory provides a 40-milliamp output current (the CALIBRATOR must be set for 4 volt output), which can be used to check and calibrate current-measuring probe systems. The current signal is obtained by clipping the probe around the current loop.

Repetition Rate. The repetition rate of the CALIBRATOR is 1 kilohertz. The calibrator circuit uses frequency-stable components to maintain accurate frequency and a constant duty factor. Thus, the CALIBRATOR can be used for checking the basic sweep timing of time-base units.

Wave Shape. The square-wave output signal of the CALIBRATOR can be used as a reference wave shape when checking or adjusting the compensation of passive, high-resistance probes. The square-wave output from the CALIBRATOR has a flat top; any distortion in the displayed waveform is due to the probe compensation.

Signal Outputs

+ Sawtooth Out. The + SAWTOOTH OUT connector provides a positive-going sawtooth signal derived from the time-base unit installed in the A HORIZ compartment or from the time-base unit installed in the B HORIZ compartment.

WARNING

Electric-shock hazard present. Only qualified service personnel should internally modify the operation of this instrument.

It is possible to select either the A HORIZ or the B HORIZ compartment as the source of the sawtooth output signal (selection jumper located behind the right side panel; refer selection to qualified service personnel only). The 7934 is set to A HORIZ at the factory. The unit of time for the sawtooth output is determined by the setting of the time-base-unit Time/Division switch. Refer to Table 1-4 in the General Information section for signal parameters.

+ Gate Out. The + GATE OUT connector provides a positive-going rectangular pulse which is derived from a time-base unit installed in either horizontal plug-in compartment.

WARNING

Electric-shock hazard present. Only qualified service personnel should internally modify the operation of this instrument.

The Gate Out signal can be selected from the time-base unit installed in the A HORIZ compartment or B HORIZ compartment (selection jumper located behind the right side panel; refer selection to qualified service personnel only). The 7934 is set to A HORIZ at the factory. The duration of the + GATE OUT signal is the same as the duration of the respective sweep or, in the case of the delayed gate, it starts at the end of the delay period and lasts until the end of the sweep from the delaying time-base unit. Amplitude of the output signal at the + GATE OUT connector is about 0.5 volt into 50 ohms or about 10 volts into 1 megohm.

Vertical Signal. The VERT SIG OUT connector provides a sample of the vertical deflection signal. The source of the

http://manoman.sqhill.com

output signal at this connector is determined by the B TRIGGER SOURCE switch. In the VERT MODE position of the B TRIGGER SOURCE switch, the output signal is determined by the setting of the VERTICAL MODE switch. The output signal in the LEFT and RIGHT positions of the VERTICAL MODE switch is obtained only from the selected vertical unit. In the ALT position of the VERTICAL MODE switch, the output signal at the VERT SIG OUT connector switches between signals from the two vertical units, along with the crt display. However, the vertical output signal in the CHOP position is a composite signal and is the same as that obtained in the ADD position due to the requirements of the triggering system. The LEFT VERT and RIGHT VERT positions of the B TRIGGER SOURCE switch are independent of the selection of the VERTICAL MODE switch and provide the vertical output signal only from the selected vertical unit even when it is not selected for display.

The output voltage into a 50-ohm load is about 25 millivolts/division of crt display into a 1-megohm load. The output signal frequencies are determined by the vertical plug-in unit used (see Table 1-8, Vertical System Specification, in the General Information section).

Probe Power. The two PROBE POWER connectors on the rear panel provide operating power for active probe systems. It is not recommended that these connectors be used as a power source for applications other than the compatible probes or other accessories which are specifically designed for use with this system.

Display Photography

A permanent record of the crt display can be obtained with an oscilloscope camera system. The instruction manual for the Tektronix Oscilloscope Cameras includes complete instructions for obtaining waveform photographs.

The crt bezel provides integral mounting for Tektronix Oscilloscope Cameras. The three pins located on the left side of the crt bezel connect power to compatible camera systems. Control signals can also be received from Tektronix automatic cameras to allow camera-controlled single-shot photography (see camera manual for further information).

If the readout portion of the display is to be included on waveform photographs, the following suggestions will aid in obtaining good photographs.

1. Focus the oscilloscope display and the camera on the readout portion of the crt display. The auto-focus feature in this instrument will maintain the traces at optimum focus.

2. Set the READOUT intensity control for the minimum setting that allows the characters to be written. This normally occurs at a slightly lower intensity level than is necessary for complete writing of the waveform display. Some experimentation may be necessary to establish the correct level. Too high a setting of the READOUT intensity control will result in a broad, poorly defined photograph of the readout display.

3. If single-shot photography is used, set the READOUT intensity control to the PULSED position (see Readout Display for complete operating information). Then, the readout is displayed in a single-shot manner after the trace is complete (be sure the camera shutter remains open at least 0.5 second after the sweep is completed to photograph the entire readout). Also, set the GRAT ILLUM control counterclockwise while the trace is being photographed. Then, the graticule can be photographed later to produce a double-exposed picture showing the complete information.

Intensity Modulation

Intensity (Z-axis) modulation can be used to relate a third item of electrical phenomena to the vertical (Y-axis) and the horizontal (X-axis) coordinates without affecting the waveshape of the displayed signal. This is accomplished by changing the intensity of the displayed waveform to provide a "gray scale" display.

The voltage amplitude required for visible trace modulation depends on the setting of the A and B INTENSITY controls. A two-volt peak-to-peak signal will completely blank the display even at maximum intensity levels; lower amplitude signals can be used to change only the relative trace brightness. Negative-going signals increase the display intensity and positive-going signals decrease the display intensity.

Refer to Table 1-4 in the General Information section for specifications on Z-axis signal requirements.

Time markers applied to the rear-panel Z-AXIS INPUT connector can provide direct time reference on the display. With uncalibrated horizontal sweep or X-Y mode operation, the time markers provide a means of reading time directly from the display. If the markers are not time-related to the displayed waveform, use a single-sweep display.

Remote Input Signals

The signal source requirements to operate the remote input functions on the rear panel can be either active (pulse generator, logic circuit, etc.) or passive (switch or relay). Refer to Table 1-4, in the General Information section for specific parameters on each input.

http://manoman.sqhill.com

Remote Reset Input. An external single-sweep-reset signal can be applied to time-base units installed in the horizontal plug-in compartments through the rear-panel REMOTE RESET INPUT connector. This remote reset function is a duplication of the manually-operated single sweep reset function (pushbutton) located on the front panel of the 7B-Series time-base units.

Remote Erase Input. The storage screen can be erased by applying a signal to the REMOTE ERASE INPUT. However, if the SAVE mode is being used, the stored display cannot be erased by either the front-panel erase button or the rear-panel REMOTE ERASE INPUT signal.

Remote Save Input. The SAVE storage mode can be entered into by applying a signal to the REMOTE SAVE INPUT connector. The SAVE mode prevents accidental erasure and/or additional storage of the stored display.

Remote Storage Gate Input. The FAST BISTABLE and FAST VAR PERSIST storage modes can be externally controlled by applying a gate signal to the REMOTE STORAGE GATE INPUT. The positive-going transition of the gate enables the transfer storage mesh to retain the display. The negative-going transition transfers the display stored on the transfer storage mesh to the storage screen (the display is not visible until transferred to the storage screen). However, if the displayed sweep starts before the positive transition of the remote storage gate, the transfer storage mesh is enabled at the start of the displayed sweep. Then, the display stored on the transfer storage mesh will not be transferred until the displayed sweep has ended and the negative transition of the remote storage gate occurs.

APPLICATIONS

The 7934 Oscilloscope and its associated plug-in units provide a flexible measurement system. The capabilities of the overall system depends mainly upon the plug-in units selected for use with this instrument. Specific applications for the individual plug-in units are described in the plug-in unit instruction manuals. The overall system can also be used for many applications which are not described in detail, either in this manual or in the manuals for the individual plug-in units. Contact your Tektronix Field Office or representative for assistance in making specific measurements with this instrument.

The following books describe oscilloscope measurement techniques which can be adapted for use with this instrument:

John D. Lenk, "Handbook of Oscilloscopes, Theory, and Application", Prentice-Hall Inc., Englewood Cliffs, New Jersey, 1968.

J. Czech, "Oscilloscope Measuring Techniques", Springer-Verlag, New York, 1965.

J. F. Golding, "Measuring Oscilloscopes", Transatlantic Arts, Inc., 1971.

Charles H. Roth, Jr., "Use of the Oscilloscope", programmed text, Prentice-Hall Inc., Englewood Cliffs, New Jersey, 1970.

Vertical Amplifier Plug-in Units

All 7A-Series plug-in units (except the 7A21N unit) can be used with the 7934. Bandwidth and sensitivity ranges should be taken into consideration when selecting amplifier plug-in units.

Single-Trace. Any single-channel amplifier will display a signal, with the sweep provided by any 7B-Series time-base plug-in. This combination leaves two unused compartments available for other special purpose units. Blank plug-in panels are available to cover any unfilled plug-in compartments.

Dual-Trace. A dual-channel amplifier in either vertical compartment can display two separate signals with the other vertical compartment free for other uses.

Three-trace. A dual-channel amplifier can be used with any single-channel amplifier to display three separate signals. If two time-base plug-in units are used in the horizontal compartments, two signals can be displayed at one sweep rate while the third signal is displayed at the other sweep rate.

Four-Trace. Two dual-channel amplifiers can display four separate signals. if one time-base unit is used, all four signals will be displayed at the same sweep rate.

Time-Base Plug-In Units

The 7934 is compatible with time-base units of the 7B70, 7B80, and 7B90 Series. Sweep rates and triggering ranges should be taken into consideration when selecting time-base plug-in units.

To obtain a delayed-sweep display, a delaying time-base unit must be installed in the A HORIZ compartment and a delayed time-base unit installed in the B HORIZ compartment. If a dual time-base unit is used, a delayed-sweep display can be obtained with one horizontal plug-in unit in either horizontal compartment. This leaves the other hori-

http://manoman.sqhill.com

zontal compartment available for other plug-in units as suggested later in this section.

NOTE

7B50-Series time-base units are not recommended for use with this instrument because they require a longer delay line than is in the 7934. Therefore, the triggering event may not appear on the display.

Sampling Displays

Sampling-system plug-in units for the 7000-Series oscilloscopes provide displays of fast-changing signals that cannot be examined using any other method. For example, sampling systems available for the 7934 can resolve repetitive signals having less than 10 millivolts of peak amplitude and occurring in less than 1 nanosecond.

The technique used for sampling is very similar in principle to the use of stroboscopic light to study fast motion. Samples of successive waveforms are taken, amplified by a relatively low-bandwidth amplifier, and then displayed on the crt as a replica of the sample waveforms.

Three sampling systems are available at this time for the 7934: (1) the 7S12, which provides time-domain-reflectometry displays for general-purpose measurements, (2) the 7S11/7T11A system and (3) the 7S14, a dual-channel vertical sampling system, including main and delayed sweep functions. See the Tektronix Products Catalog to determine the characteristics of the individual units mentioned and of additional units made available after this manual is published.

Single-Trace Sampling. A single-trace sampling display requires either a double-width 7S12 (which includes a time-base), or the 7S11 sampling unit and the 7T11A sampling sweep unit. Direct interconnections between the 7S11 and the 7T11A require these units to be adjacent, with the 7S11 in the RIGHT VERT compartment and the 7T11A in the A HORIZ compartment. If either the 7S12 or the 7S14 is used, it must be located in the middle two compartments to make the proper connections with the 7934.

Dual-Trace Sampling. Two 7S11 plug-ins can be used with a single sampling time-base unit for time-related displays of two signals. Direct interconnections from the LEFT VERT 7S11 pass through the RIGHT VERT 7S11 to reach the A HORIZ time-base unit.

The 7S14 is a dual-channel sampling unit with delaying sweep capability. It must be used in the middle two plug-in compartments..

Dual-trace sampling displays can also be made by a 7S12 in the middle two compartments and a 7S11 in the LEFT VERT compartment. In this application, the 7S12 supplies the time-base for both traces.

X-Y Sampling. One 7S11 inserted in the RIGHT VERT compartment and one in the adjacent A HORIZ compartment automatically share a 50 kilohertz free-running strobe condition specified for X-Y displays. The 7S14 has an X-Y operation incorporated as one of its normal mode functions.

Special Purpose Plug-In Units

Digital Counters and Multimeter Plug-In Units. The digital-multimeter plug-in units measure current, voltage, temperature, and resistance; digital-frequency-counter plug-in units measure frequency, from dc to above 500 MHz. These units make use of the readout system to display the measured information on the crt and can function in any compartment, in combination with each other, or with any other plug-in units available for use with the 7934 oscilloscope system.

The ability of digital readout plug-in units to operate with other plug-in units makes it possible to process and monitor signals at the same time the digital measurement is being made. For example, by locating a frequency counter in one of the vertical compartments and an amplifier unit in the other vertical compartment, the crt can display the trigger waveform, superimposed on the displayed signal, to indicate the actual triggering point. Or, if the counter is placed in a horizontal compartment, a low-amplitude signal can be applied to a vertical amplifier and amplified before it is internally routed by the trigger source switches to the counter trigger circuit. This allows the unit to be used on signals too small to trigger other counters.

Readout Access Plug-In Unit. The 7M13 Readout plug-in unit provides front-panel keyboard operation for convenient access to the crt readout characters. This allows information, such as dates and identifying nomenclature, to be displayed on the crt with the normal crt display. This capability is particularly useful when making photographs.

Transistor Curve-Tracer Plug-In Units. The 7CT1N Curve Tracer plug-in checks small-signal transistors and diodes by producing a display showing the basic characteristic curves for the device being tested. Stepped sweep signals from an internal power supply are applied to the device under test. The resulting output signals are, in turn, applied to the horizontal and vertical deflection systems of the oscilloscope to plot a family of characteristic curves. This plot can be used to check for damaged transistors and diodes, or to select for special or matched characteristics and to calculate gain, leakage, breakdown voltage, etc.

http://manoman.sqhill.com

Spectrum Analyzer Plug-In Units. The 7000-Series spectrum analyzer plug-in units display applied-signal amplitudes dispersed over portions of the rf spectrum. Absolute signal energy is plotted on the vertical axis against frequency on the horizontal axis. Applications include waveform and distortion analysis, EMC and random noise measurements, filter design, spectrum surveillance, etc.

X-Y Operation

In some applications, it is desirable to display one signal versus another (X-Y) rather than against time (internal sweep). The flexibility of the amplifier plug-in units available for use with the 7934 provide the means of applying external signals to the horizontal-deflection system.

Installation of a 7A-Series amplifier plug-in unit in one of the horizontal and one of the vertical compartments provides X-Y operation. For further information, refer to the horizontal specifications in this manual and to the individual instruction manuals for the amplifier units.

Some of the 7B-Series time-base units can be operated as amplifiers in addition to their normal uses as time-base generators. This feature allows an external signal to provide the horizontal deflection to the crt. For most of the time-base units with the amplifier function, the X (horizontal) deflection signal can be connected either to an external input connector on the time-base unit, or it can be routed to the time-base unit through the internal triggering system (see time-base instruction manual for details). If the latter method is used, the A and B TRIG SOURCE switches must be set so that the X (horizontal) deflection signal is obtained from one of the vertical amplifier units and Y (vertical) deflection signal is obtained from the other vertical unit. The attenuator switch on the amplifier unit can provide the horizontal with a preconditioned signal, compatible with the horizontal deflection factor. Also, plug-in units need not be moved from one compartment to another to change from X-Y operation to other modes of operation.

The Horizontal Selector switch (located behind the metal shield at the rear of the A HORIZ compartment) provides a method of storing X-Y displays using the FAST BISTABLE or FAST VAR PERSIST storage modes. Details on use of this switch to store X-Y displays is given under Horizontal Selection earlier in this section.

Raster Displays

A raster-type display can be used effectively to increase the apparent sweep length. For this type of display, the trace is deflected both vertically and horizontally by sawtooth signals. This is accomplished in the 7934 by installing a 7B-Series time-base unit in one of the vertical plug-in compartments. Normally, the time-base unit in the vertical compartment should be set at a slower sweep rate than the time-base unit in the horizontal compartment; the number of horizontal traces in the raster depends upon the ratio between the two sweep rates.

Information can be displayed on the raster using several different methods. In the ADD position of the VERTICAL MODE switch, the signal from an amplifier unit can be algebraically added to the vertical waveform. With this method, the vertical signal amplitude on the crt should not exceed the distance between the horizontal lines of the raster. Another method of displaying information on the raster is to use the Z-AXIS INPUT to provide intensity modulation for the display. This type of raster display could be used to provide a television-type display. Complete information on operation using the Z-axis feature is given under Intensity Modulation.

To provide a stable raster display, both time-base units must be correctly triggered. Internal triggering is not provided for the time-base units when they are in the vertical compartments; external triggering must be used. Also, blanking is not provided from the time-base units when they are installed in a vertical compartment.

http://manoman.sqhill.com

Table 3-1
OPTION INFORMATION LOCATOR

Instrument Option	Manual Section	Location of Information
Option 02 (Provides X-Y Delay Compensation)	Section 1 General Information	Specification. Table 1-4 contains the electrical characteristics for Option 02.
	Section 6 Checks and Adjustments	Horizontal System. E3. Check/Adjust X-Y Compensation.
	Section 7 Replaceable Electrical Parts	Replaceable Electrical Parts. Replaceable parts unique to Option 02 are footnoted "Option 02 only".
	Section 8 Diagrams and Circuit Board Illustrations	Horizontal Interface (Diagram 8). Diagram 8, shows circuitry unique to Option 02.
	Section 9 Replaceable Mechanical Parts	Instrument Options (pull-out page). Provides a mechanical parts list and an exploded-view drawing unique to Option 02.
Option 03 (Provides EMC)	Section 1 General Information	Specification. Table 1-4 contains the electrical characteristics for Option 03.
	Section 02 Operating Instructions	Detailed Operating Information. Light Filter; includes basic description. Installation of Plug-In Units. Refers to EMC shielded blank plug-in panel.
	Section 7 Replaceable Electrical Parts	Replaceable Electrical Parts. Replaceable parts unique to Option 03 contain the footnote "Option 03 only".
	Section 9 Replaceable Mechanical Parts	Instrument Options (pull-out page). Provides a mechanical parts list and an exploded-view drawing unique to Option 03.

http://manoman.sqhill.com

http://manoman.sqhill.com

http://manoman.sqhill.com

THEORY OF OPERATION

This section describes the circuitry used in the 7934 Storage Oscilloscope. The description begins with a discussion of the instrument, using the block diagram shown in Figure 4-1. Next, each circuit is described in detail with supporting illustrations, when appropriate, to show the relationship between the stages in each major circuit. Detailed schematics of each circuit are located in the Diagrams section at the rear of this manual. Refer to these schematics throughout the following circuit description for specific electrical values and relationships.

BLOCK DIAGRAM DESCRIPTION

The following block diagram discussion is provided to aid in understanding the overall concept of the 7934 before the individual circuits are discussed in detail. A basic block diagram of the 7934 is shown in Figure 4-1. Only the basic interconnections between the individual blocks are shown on this diagram. Each major circuit within the instrument is given a block number (shown in a diamond). The number of each block refers to the complete circuit diagram located at the rear of this manual.

Vertical signals to be displayed on the crt are applied to the Vertical Interface circuit from both vertical plug-in compartments. The VERTICAL MODE switch determines whether the signals from the LEFT VERT or RIGHT VERT compartment are displayed on the crt. The selected vertical signal(s) are amplified by the Vertical Amplifier circuit to bring them to the level necessary to drive the vertical deflection plates of the crt (cathode-ray tube). The Vertical Amplifier circuit also includes an input from the Readout System to produce the vertical portion of the alphanumeric readout display.

Horizontal signals for display on the crt are connected to the Horizontal Interface circuit from both horizontal plug-in compartments. The HORIZONTAL MODE switch determines whether the signals from the A HORIZ or B HORIZ units are displayed by the crt. The selected horizontal signal(s) are amplified by the Horizontal Amplifier circuit to provide horizontal deflection on the crt. The Horizontal Amplifier circuit also accepts an input signal from the Readout System to produce the horizontal portion of the alphanumeric display.

The Readout System provides an alphanumeric display of information encoded by the plug-in unit(s). The readout display is written on the crt on a time-shared basis with the analog waveform display. The Mode Switch circuits determine which plug-in units display readout information.

The internal trigger signals from the vertical plug-in units are connected to the Trigger Selector circuit. The Mode Switch and Trigger Selector circuits direct trigger signals from the LEFT VERT or RIGHT VERT units to the A HORIZ or B HORIZ units. The A Trigger Selector circuit also produces the drive signal for the Vertical Signal Output which is a sample of the vertical signal.

The Logic circuit develops control signals for use in other circuits within this instrument and the plug-in units. These control signals automatically determine the correct instrument operation in relation to the plug-in units, plug-in unit control settings, and the 7934 control settings.

The CRT Circuit contains the control circuits necessary for operation of the crt. The Auto Focus Amplifier provides control voltages to maintain optimum focus of the crt display. The Z-Axis Amplifier provides the drive signal to control the intensity level of the crt display.

The Calibrator circuit produces a 1 kilohertz square-wave signal which can be used to check the calibration of this instrument and the compensation of probes. The calibrator signal is available as a voltage at the CALIBRATOR connector or as a current through a 40 milliamp optional current loop accessory.

The Output Signals circuit processes signals from the plug-in units for rear-panel output.

The Storage Display and Storage Control circuits produce the timing signals and control voltages required to operate the storage functions of the crt.

The Converter/Rectifiers and Low-Voltage Regulator circuits provide the power necessary to operate this instrument. These voltages are connected to all circuits within the instrument. The CRT Circuit contains a high-voltage power supply that provides accelerating potential for the crt.

http://manoman.sqhill.com

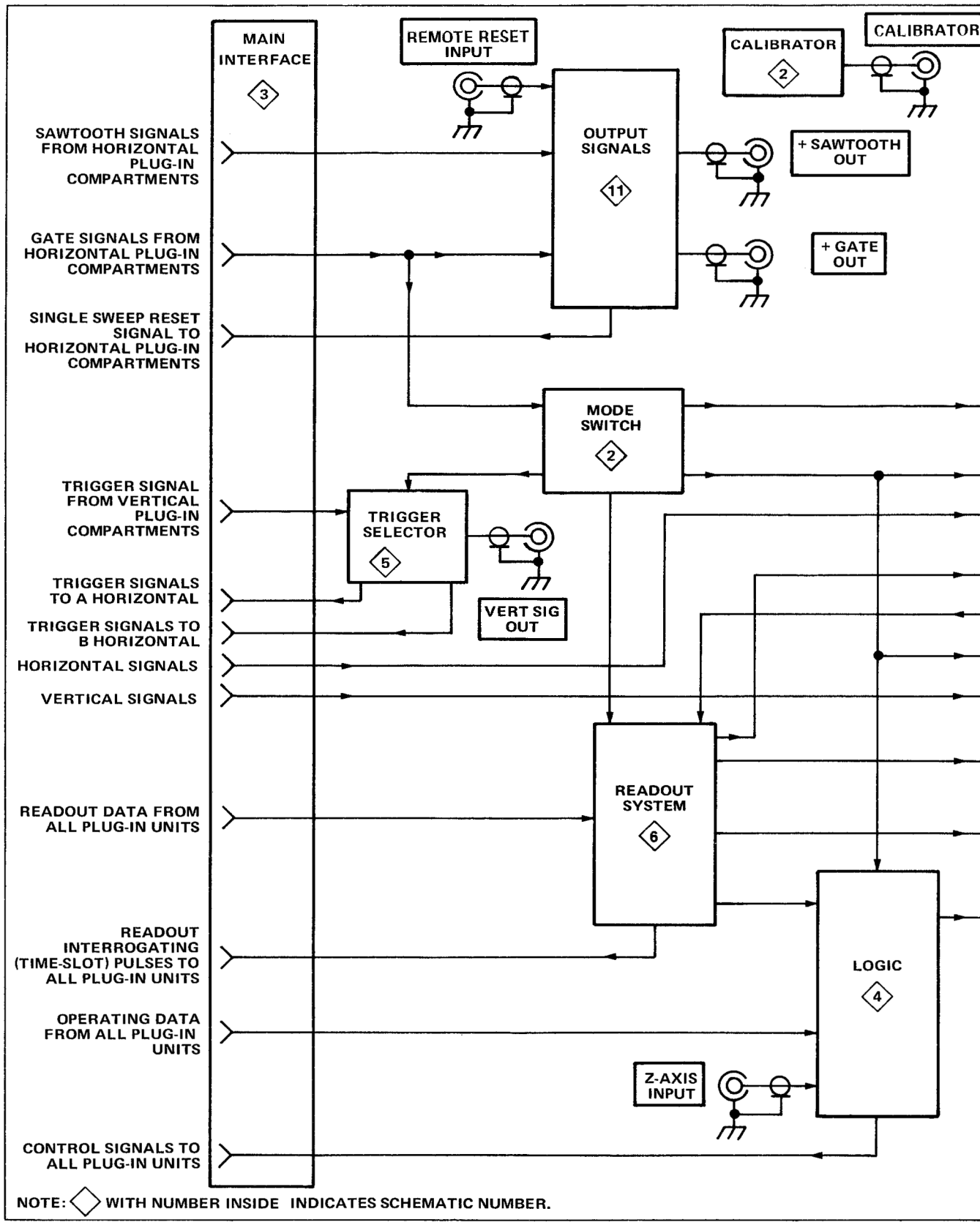

Figure 4-1a. Basic block diagram of the 7934 Storage Oscilloscope.

http://manoman.sqhill.com

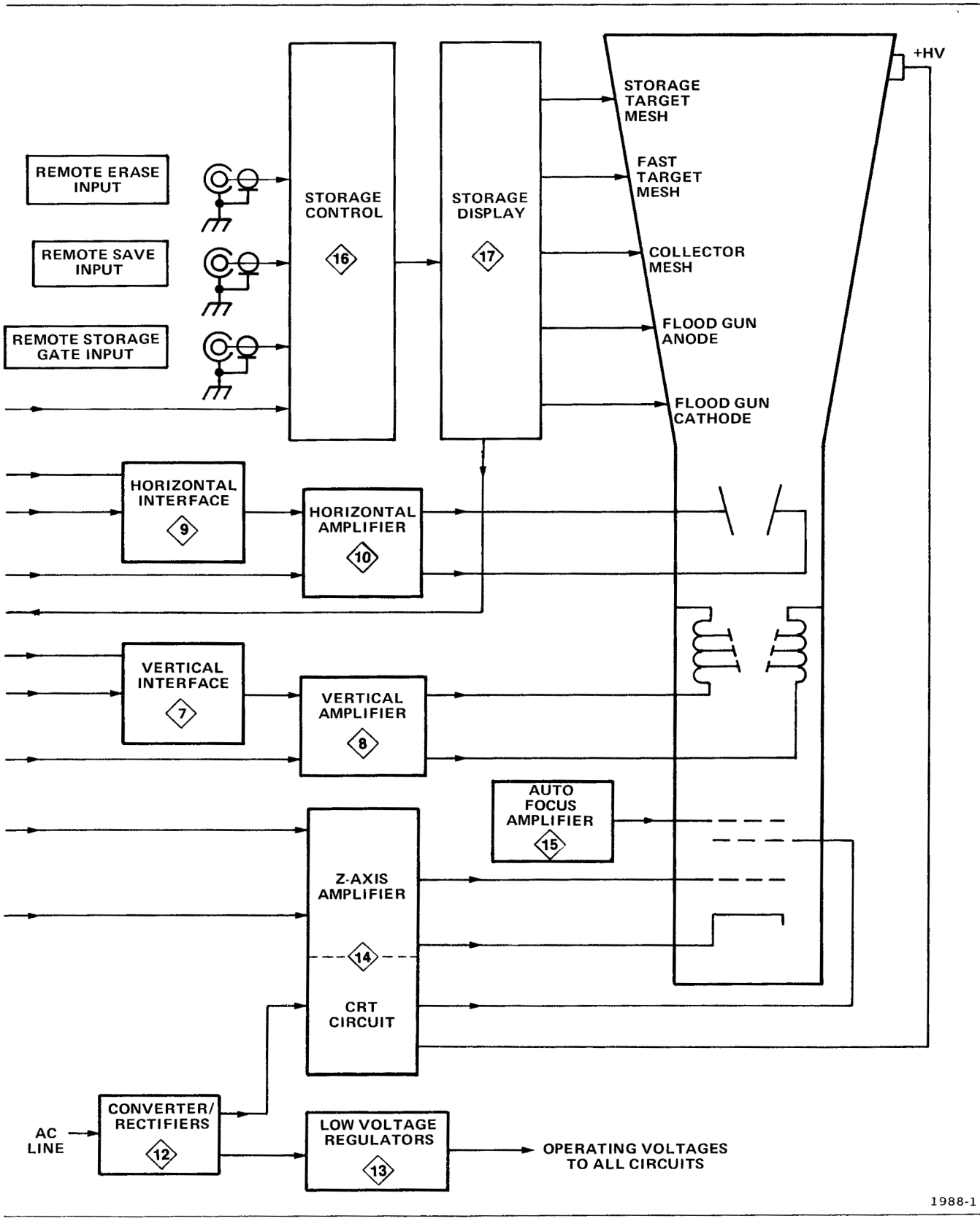

Figure 4-1b. Basic block diagram of the 7934 Storage Oscilloscope.

http://manoman.sqhill.com

DETAILED CIRCUIT OPERATION

This portion of the Theory of Operation section provides a detailed description of the electrical operation and relationship of the circuits in the 7934. The theory of operation for circuits unique to this instrument is described in detail in this discussion. Circuits commonly used in the electronics industry are not described in detail. If more information is desired on these commonly used circuits, refer to available textbooks.

The following circuit analysis is accompanied by supporting illustrations that give the names of the individual stages within the major circuits, and show how they are connected together to form the major circuit. These illustrations also show the inputs and outputs for each circuit and the relationship of the front-panel controls to the individual stages. The detailed circuit diagrams from which the illustrations are derived are shown in the Diagrams section.

LOGIC FUNDAMENTALS

Digital logic techniques are used to perform many functions within this instrument. The function and operation of the logic circuits are described using logic symbology and terminology. This portion of the manual is provided to aid in the understanding of these symbols and logic concepts. It is not a comprehensive discussion of the subject. For further information on binary number systems and the associated Boolean algebra concepts, the derivation of logic functions, or a more detailed analysis of digital logic, refer to available textbooks.

Symbols

The operation of circuits in this instrument which use digital techniques is described using graphic symbols set forth in military standard MIL-STD-806B. Table 4-1 provides a basic logic reference for the logic devices used within this instrument. Any deviations from the standard symbology, or devices not defined by the standard are described in the circuit description for the applicable device.

NOTE

Logic Symbols used on the diagrams depict the logic function as used in this instrument and may differ from the manufacturer's data.

Logic Polarity

All logic functions are described using the positive logic convention. Positive logic is a system of notation where the more positive of two levels (HI) is called the true or 1-state; the more negative level (LO) is called the false or 0-state. The HI-LO method of notation is used in this logic description. The specific voltages that constitute a HI or LO state vary between individual devices. Whenever possible, the input and output lines are named to indicate the function that they perform when at the HI (true) state.

Input/Output Tables

Input/Output (truth) tables are used to show the input combinations important to a particular function, along with the resultant output conditions. This table may be given either for an individual device or for a complete logic stage. For examples of input/output tables for individual devices, see Table 4-1.

NON-DIGITAL DEVICES

Not all of the integrated circuit devices in this instrument are digital logic devices. The function of non-digital devices is described individually, using operating waveforms or other techniques to illustrate their function.

CABLING
Diagram 1

Diagram 1, in the Diagrams and Circuit Board Illustrations section at the rear of this manual, shows the interconnections between the circuit boards within the 7934.

CALIBRATOR AND MODE SWITCH
Diagram 2

The Calibrator circuit provides square-wave voltage outputs at the front-panel CALIBRATOR output connector. A current output of 40 milliamp is available from the Calibrator with an optional current loop adapter (CALIBRATOR switch must be set to the 4 V position).

The Mode Switch circuit includes front-panel switching and provides the logic for selection of the vertical and horizontal compartments that provide deflection for the crt. The Mode Switch circuit operates in conjunction with the Logic circuit (diagram 4) to develop control signals for use in other circuits within this instrument, and within plug-in units installed in the plug-in compartments.

Figure 4-2 shows a detailed block diagram of the Calibrator and Mode Switch circuits. A schematic of these circuits is shown on diagram 2 at the rear of this manual.

http://manoman.sqhill.com

Table 4-1
BASIC LOGIC REFERENCE

Device	Symbol	Description	Input/Output Table
AND gate	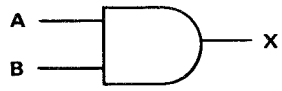	A device with two or more inputs and one output. The output of the AND gate is HI if and only if all of the inputs are at the HI state.	Input / Output A, B, X LO, LO, LO LO, HI, LO HI, LO, LO HI, HI, HI
NAND gate	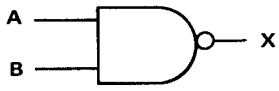	A device with two or more inputs and one output. The output of the NAND gate is LO if and only if all of the inputs are at the HI state.	Input / Output A, B, X LO, LO, HI LO, HI, HI HI, LO, HI HI, HI, LO
OR gate	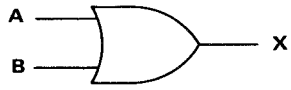	A device with two or more inputs and one output. The output of the OR gate is HI if one or more of the inputs are at the HI state.	Input / Output A, B, X LO, LO, LO LO, HI, HI HI, LO, HI HI, HI, HI
NOR gate	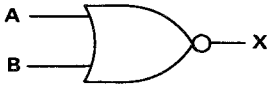	A device with two or more inputs and one output. The output of the NOR gate is LO if one or more of the inputs are at the HI state.	Input / Output A, B, X LO, LO, HI LO, HI, LO HI, LO, LO HI, HI, LO
Inverter	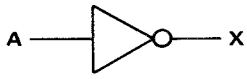	A device with one input and one output. The output state is always opposite to the input state.	Input / Output A, X LO, HI HI, LO

http://manoman.sqhill.com

Table 4-1 (cont.)

Device	Symbol	Description	Input/Output Table
LO-state indicator	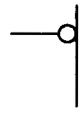	A small circle at the input or output of a symbol indicates that the LO state is the significant state. Absence of the circle indicates that the HI state is the significant state. Two examples follow:	Input / Output A, B, X LO, LO, LO LO, HI, HI HI, LO, LO HI, HI, LO
	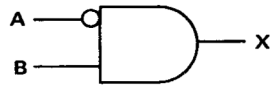	AND gate with LO-state indicator at the A input. The output of this gate is HI if and only if the A input is LO and the B input is HI.	
	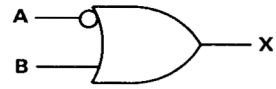	OR gate with LO-state indicator at the A input: The output of this gate is HI if either the A input is LO or the B input is HI.	Input / Output A, B, X LO, LO, HI LO, HI, HI HI, LO, LO HI, HI, HI
Edge symbol	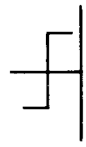 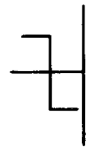	Normally superimposed on an input line to a logic symbol. Indicates that this input (usually the trigger input of a flip-flop) responds to the indicated transition of the applied signal.	
Triggered (toggle) Flip-Flop	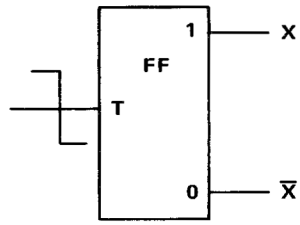	A bistable device with one input and two outputs (either or both outputs may be used). When triggered, the outputs change from one stable state to the other stable state with each trigger. The outputs are complementary (i.e., when one output is HI the other is LO). The edge symbol on the trigger (T) input may be of either polarity depending on the device.	Input / Output Condition before trigger pulse: X, $\overline{X}$ Condition after trigger pulse: X, $\overline{X}$ LO, HI, HI, LO HI, LO, LO, HI

http://manoman.sqhill.com

Table 4-1 (cont.)

Device	Symbol	Description	Input/Output Table
Set-Clear (J-K) Flip-Flop	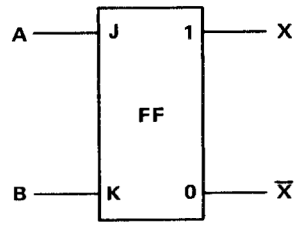	A bistable device with two inputs and two outputs (either or both outputs may be used). The outputs change state in response to the states at the inputs. The outputs are complementary (i.e., when one output is HI the other is LO).	Input / Output A, B, X, $\overline{X}$ LO, LO, No change LO, HI, LO, HI HI, LO, HI, LO HI, HI, Changes state
D (data) Type Flip-Flop	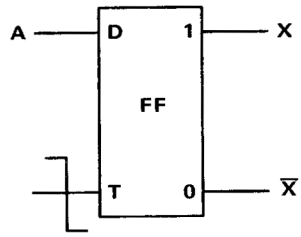	A bistable device with two inputs and two outputs (either or both outputs may be used). When triggered the state of the "1" output changes to the state at the data (D) input prior to the trigger. The outputs are complementary (i.e., when one output is HI the other is LO). The edge symbol on the trigger (T) input may be of either polarity, depending on the device.	Input / Output A, X, $\overline{X}$ LO, LO, HI HI, HI, LO **Output conditions shown after trigger pulse**
Triggered Set-Clear (J-K) Flip-Flop	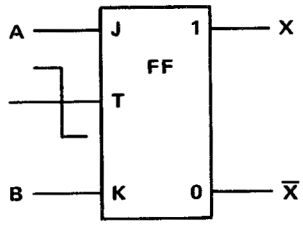	A bistable device with three or more inputs and two outputs (either or both outputs may be used). When triggered, the outputs change state in response to the states at the inputs prior to the trigger. The outputs are complementary (i.e., when one output is HI the other is LO). The edge symbol on the trigger (T) input may be of either polarity depending on the device.	Input / Output A, B, X, $\overline{X}$ LO, LO, No change LO, HI, LO, HI HI, LO, HI, LO HI, HI, Changes state **Output conditions shown after trigger pulse**
Flip-Flop with Direct Inputs (may be applied to all triggered flip-flops)	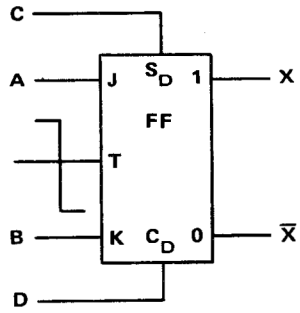	For devices with direct-set (S_D) or direct-clear (C_D) inputs, the indicated state at either of these inputs over-rides all other inputs (including trigger) to set the outputs to the states shown in the input/output table.	Input / Output A, B, C, D, X, $\overline{X}$ 1, 1, LO, LO, No change[1] Φ, Φ, LO, HI, LO, HI Φ, Φ, HI, LO, HI, LO Φ, Φ, HI, HI, Undefined **Φ = Has no effect in this case** **[1]Output state determined by conditions at triggered inputs**

http://manoman.sqhill.com

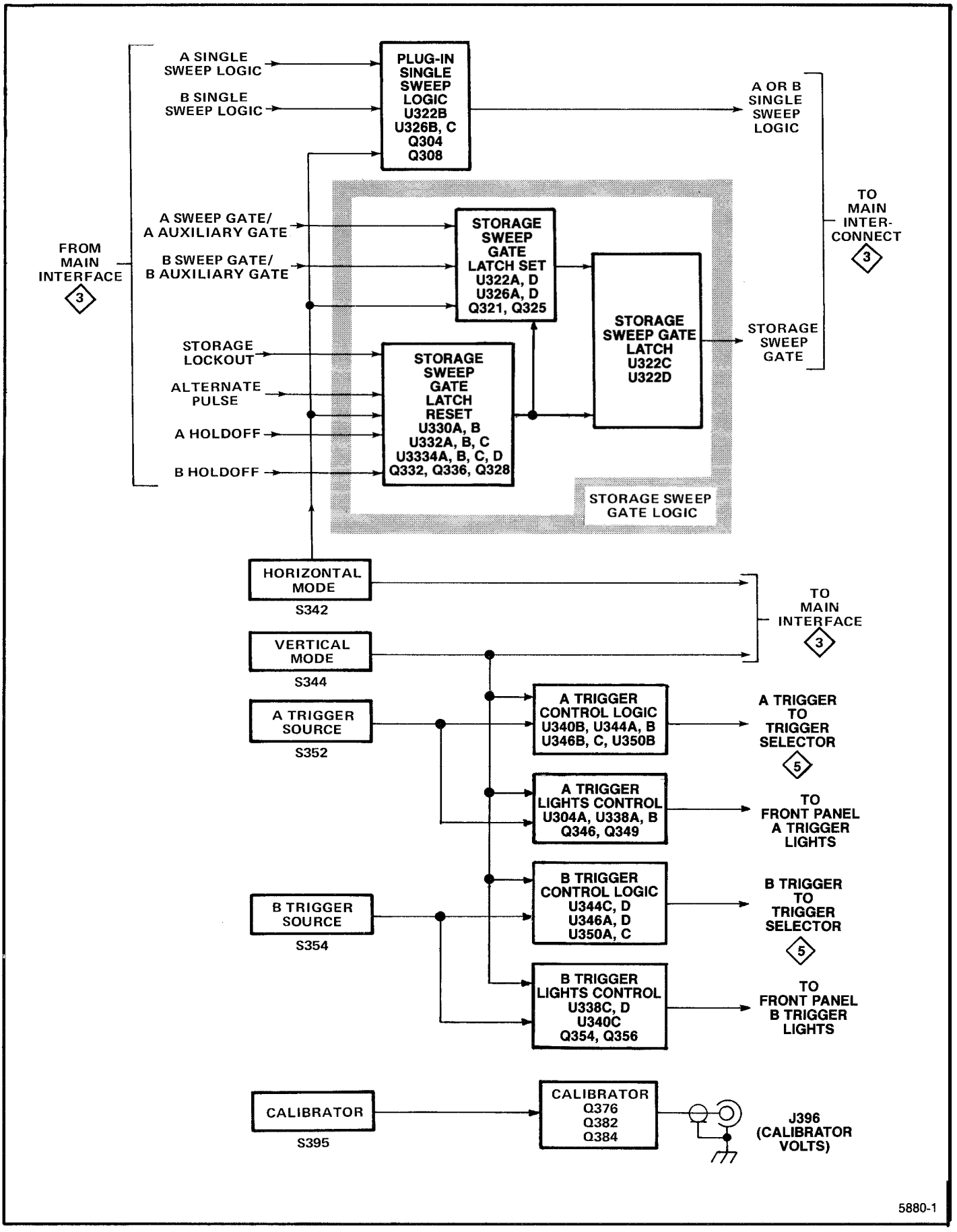

Figure 4-2. Detailed block diagram of the Calibrator and Mode Switch circuit.

http://manoman.sqhill.com

Calibrator

Transistors Q376 and Q382 comprise a 1 kilohertz, square-wave oscillator. Oscillation occurs as follows: Initially assume that Q376 is conducting and Q382 is not conducting. The voltage at the emitter of Q382 becomes more negative as C376 discharges through R381. Capacitor C376 discharges until the emitter-base junction of Q382 becomes forward biased. As Q382 begins conducting the oscillator changes states. Regeneration starts when Q382 conducts and C376 stops discharging; this reduces the collector current of Q376. Thus, the collector voltage of Q376 rises positive which causes the base and emitter of Q382 to rise positive. The positive-going voltage is coupled by C376 to the emitter of Q376, turning it off.

Now, Q382 is conducting and Q376 is not conducting. The voltage at the emitter of Q376 goes negative as C376 charges through R376. When the emitter-base junction of Q376 becomes forward biased the oscillator will again change states to complete the cycle.

The square wave signal produced at the collector of Q382 switches Q384 on and off. When Q384 is on, the current from R383 and R384 flows to ground. When Q384 is off, this current flows through CR386 and R386 into the voltage divider network of R388, R392, R393, R394, R395, R396, and R397 to produce the 4 volt, 0.4 volt, and 40 millivolt Calibrator output voltages. The accuracy of the Calibrator is set by the 0.4 Volts DC adjustment, R385. Both the 4 V and 0.4 V Calibrator pushbutton switches must be engaged when adjusting R385. The Calibrator frequency is set by the 1 kHz adjustment, R375.

Plug-in Single Sweep Logic

The Plug-in Single Sweep Logic stage (consisting of U322B, U326B, U326C, Q304, and Q308) develops the A or B Single Sweep Logic level for use by the Storage Control circuit on diagram 16. A HI logic level is produced at pin 8 of U326C whenever the time-base unit selected by the HORIZONTAL MODE switch is set for single-sweep operation. When the HORIZONTAL MODE switch is set to ALT or CHOP, pin 8 of U326C will be HI if either the A or B time-base unit is set for single-sweep operation.

Storage Sweep Gate Logic

The Storage Sweep Gate Logic stage develops the Storage Sweep Gate used by the Storage Control circuit on diagram 16. Gate signals from the time-base unit(s) selected by the HORIZONTAL MODE switch determine when the Storage Sweep Gate will occur.

Storage Sweep Gate Latch. The Storage Sweep Gate Latch, U322C and U332D, produces the positive-going Storage Sweep Gate at pin 8 of U322C. Once pin 10 of U322C goes LO, the output at pin 8 of U322C goes HI and remains HI until pin 13 of U332D goes LO, at which time the output will return to its LO state.

Storage Sweep Gate Latch Set. The Storage Sweep Gate Latch Set stage, consisting of U322A, U322D, Q321, Q325, U326A, and U326D provides the signal to set the output of the Storage Sweep Gate Latch stage to the HI state. The HORIZONTAL MODE switch determines whether the A Sweep Gate/A Auxiliary Gate or the B Sweep Gate/B Auxiliary Gate is used to set the Storage Sweep Gate Latch. The HORIZONTAL MODE switch applies logic levels to pin 2 of U322A and U326A for the gate selection. When the HORIZONTAL MODE switch is set to ALT or CHOP, pin 2 of U322A and U326A are HI so that the gate which occurs first (from either the A or B time-base unit) sets the output of the Storage Sweep Gate Latch HI.

Storage Sweep Gate Latch Reset. The Storage Sweep Gate Latch Reset stage, consisting of U330A, U330B, U332A, U332B, U332C, U334A, U334B, U334C, U334D, Q328, Q332, and Q336, provides the signal to reset the output of the Storage Sweep Gate Latch stage to its LO state. The reset signal is produced when any one of the following conditions occur:

(1) The Storage Lockout signal (pin 2 of J344) goes HI.

(2) The Alternate Pulse signal (pin 14 of J344) goes HI with the HORIZONTAL MODE switch set to A or B.

(3) The A Holdoff and B Holdoff signals (pin 2 and 21 of P344 respectively) both go HI with the HORIZONTAL MODE switch set to ALT or CHOP.

In condition 1 above, the positive-going Storage Lockout signal is inverted by Q328 to reset the Storage Sweep Gate Latch through U322D. This reset can occur at any time with any setting of the HORIZONTAL MODE switch.

In condition 2 the positive-going Alternate Pulse signal occurs at the beginning of each A and B Holdoff signal. The Alternate Pulse signal passes through U332C when pin 9 is HI (HORIZONTAL MODE switch set to A or B). The signal is then inverted by U332B and applied to the base of Q328; this, in turn, resets the output of the Storage Gate Latch to its LO state.

In condition 3 the positive-going A Holdoff signal is coupled through Q332 and U334D to the clock input (pin 3) of U330A setting pin 5 of U330A HI at the beginning of the A Holdoff signal. Likewise, the positive-going B Holdoff signal sets pin 9 of U330B HI. When pins 5 and 9 of U330A and U330B are HI, a LO is applied to pin 4 of U332B. This LO is inverted by U332B and applied to the base of Q328 to reset the Storage Sweep Gate Latch output to its LO state.

http://manoman.sqhill.com

Trigger Control Logic

The Trigger Control Logic stage determines the control signals to the A and B Trigger Selector circuits based on the setting of the VERTICAL MODE and A and B TRIGGER SOURCE switches. Active components for the A Trigger Control signals are U340B, U344A, U344B, U346B, U346C, and U350B. For B Trigger, U344C, U344D, U346A, U346D, U350A, and U350C.

Control for the front panel A Trigger Source lights is provided by Q346, Q349, U304A, U338A, and U338B. This circuit allows the A Trigger Source lights to track the output signals of the A Trigger Selector circuit and thereby provide an indication of the A trigger source. The B Trigger Source light driver, Q354, Q356, U338C, U338D, U340C, provides the same function to indicate the B Trigger source.

MAIN INTERFACE
Diagram 3

Diagram 3 at the rear of this manual shows the plug-in interface and the inter-connections between the plug-in compartments, circuit boards, etc., of this instrument. Also, the signal and voltage connections of each interface connector are identified. Function of components on this diagram are described along with other circuits as applicable.

LOGIC
Diagram 4

The Logic circuit develops control signals for use in other circuits within this instrument and the plug-in units installed in the vertical and horizontal compartments. These control signals automatically determine the correct instrument operation in relation to the plug-in units installed or selected, plug-in control settings, and 7934 control settings. A block diagram of the Logic circuit is shown in Figure 4-3. A schematic of the Logic circuit is given on diagram 4 at the rear of this manual.

This circuit description for the Logic circuit is written with the approach that each of the integrated circuits and its associated discrete components compose an individual stage as shown by the block diagram (Fig. 4-3). The operation of each stage is discussed, relating the input signals or levels to the output, with consideration given to the various modes of operation that may affect the stage. A logic diagram is also provided for each stage. These diagrams are not discussed in detail but are provided to aid in relating the function performed by a given stage to standard logic techniques. It should be noted that these logic diagrams are not an exact representation of the internal structure of the integrated circuit but are only a logic diagram of the function performed by the stage. An input/output table is given, where applicable, for use with the circuit description and logic diagram. These input/output tables document the combination of input conditions that are of importance to perform the described function of an individual stage.

Horizontal Logic

The Horizontal Logic stage performs three separate logic functions: A Sweep Lockout, B Sweep Lockout, and Alternate Pulse generation. Most of the logic for these functions is contained within the Horizontal Logic IC, U4428. Figure 4-4 identifies the three individual stages within U4428 and the input and output terminals associated with each. Note that some of the input levels are connected internally to more than one of the individual stages.

A Sweep Lockout Stage. The A Sweep Lockout Stage determines if the A HORIZ time-base unit can produce a sweep. If this output is HI, the A HORIZ unit is locked out (disabled) so it cannot produce a sweep. If the level is LO, the A HORIZ unit is enabled and can produce a sweep when triggered.

As shown by the logic diagram and input/output table of Figure 4-5, only two combinations of input conditions to U4428 produce an A Sweep Lockout level (HI).

The first combination disables the A sweep while the B sweep is being displayed with the HORIZONTAL MODE switch in ALT position (both time-base units must be in sweep mode), if non-delayed operation is being used. The second combination disables the A sweep during delayed-sweep operation so that the B sweep can complete its holdoff before the next A sweep begins. If neither of these conditions occurs, the A Sweep Lockout level is determined by the Storage Lockout signal. (This signal originates in the Storage Control circuit on diagram 16.) Figure 4-5a shows the Storage Lockout signal connected to the output of the A Sweep Lockout stage through a phantom-OR gate. (A phantom-OR gate performs the OR-logic function merely by interconnection of two or more signal lines.)

B Sweep Lockout Stage. The B Sweep Lockout stage produces an output level at the collector of Q4468 that determines if the B HORIZ time-base unit can produce a sweep. A HI output level locks out (inhibits) the B HORIZ unit and a LO level enables the B HORIZ unit to produce a sweep.

http://manoman.sqhill.com

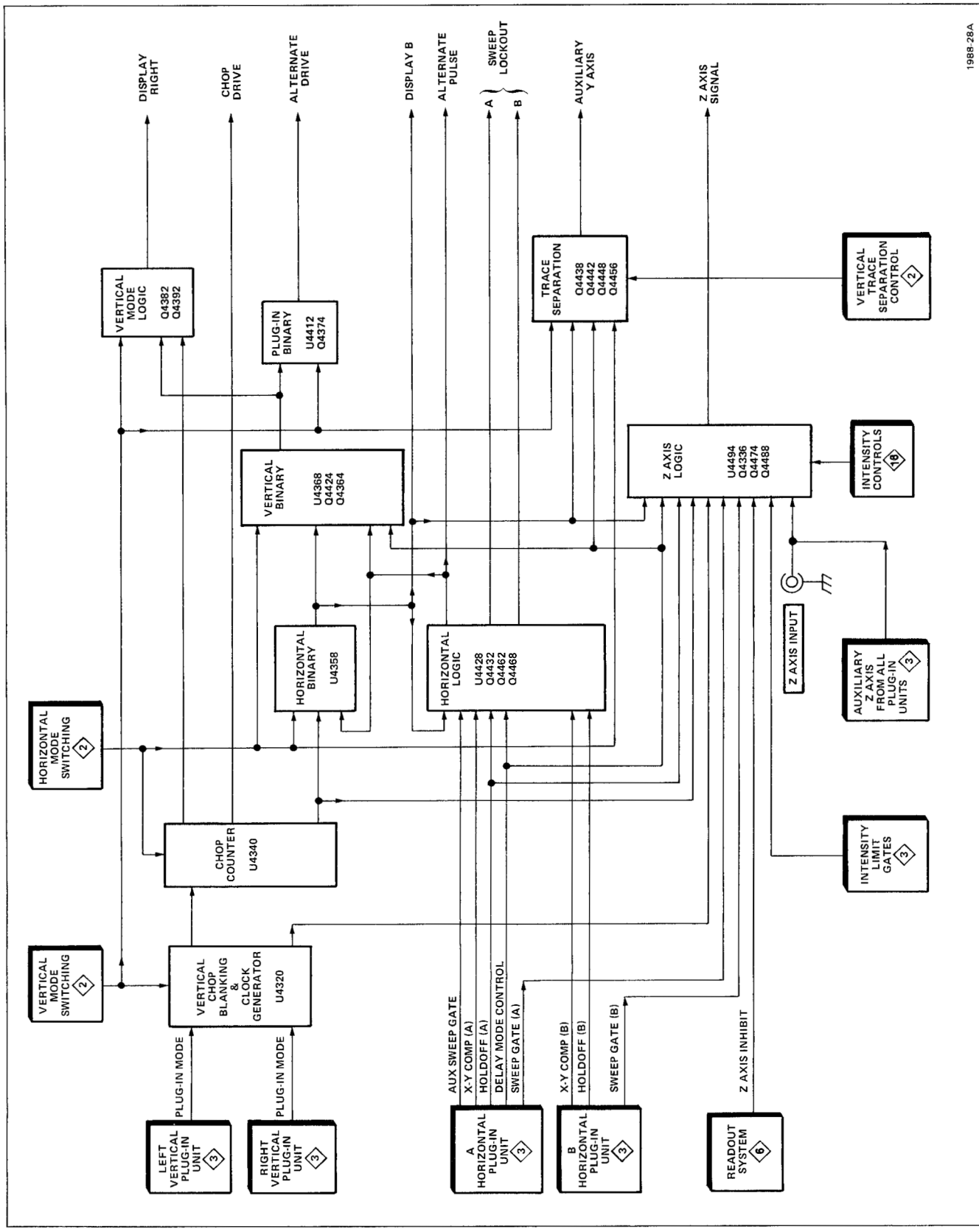

Figure 4-3. Detailed block diagram of the Logic circuit.

http://manoman.sqhill.com

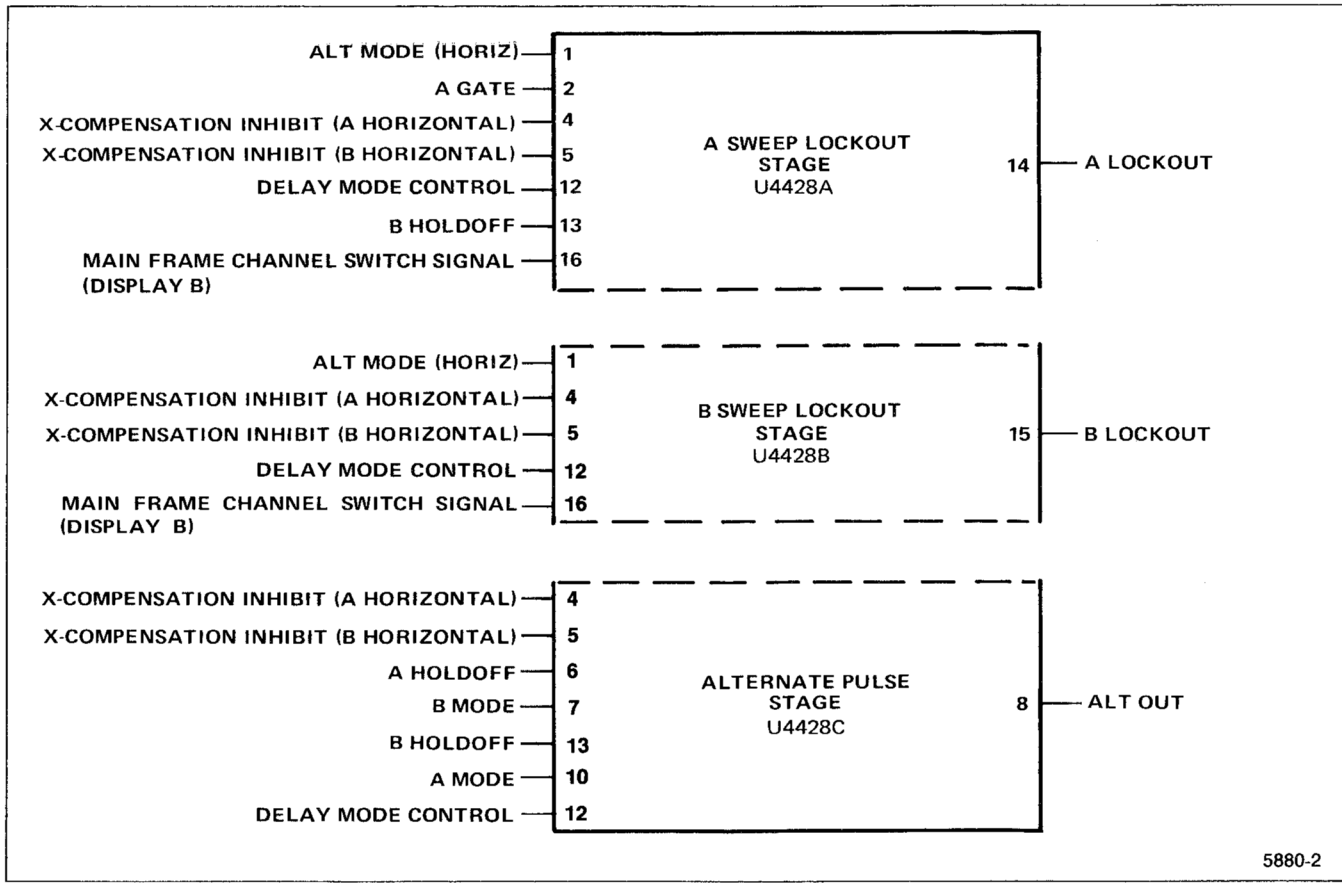

Figure 4-4. Breakdown of separate stages within Horizontal Logic IC (U4428) showing inputs and outputs for each stage.

As shown by Figure 4-6B, the output of this stage is HI only under one set of input conditions to U4428. This set of conditions disables the B sweep while the A sweep is being displayed in the ALT, HORIZONTAL MODE switch position, if both time-base units are in a sweep mode and non-delayed sweep is used. For any other combination of input conditions, the B Sweep Lockout level is determined by the Delay Gate (from A time-base unit) and the Storage Lockout signal (from Storage Control circuit, diagram 16).

Figure 4-6A shows Delay Gate and Storage Lockout connections to the output of the B Sweep Lockout stage through a phantom-OR gate.

Alternate Pulse Stage. The third function performed by the Horizontal Logic stage is to produce an Alternate Pulse signal for use by the Horizontal and Vertical Binary stages, and the Storage Sweep Gate circuit on the mode switch circuit board.

http://manoman.sqhill.com

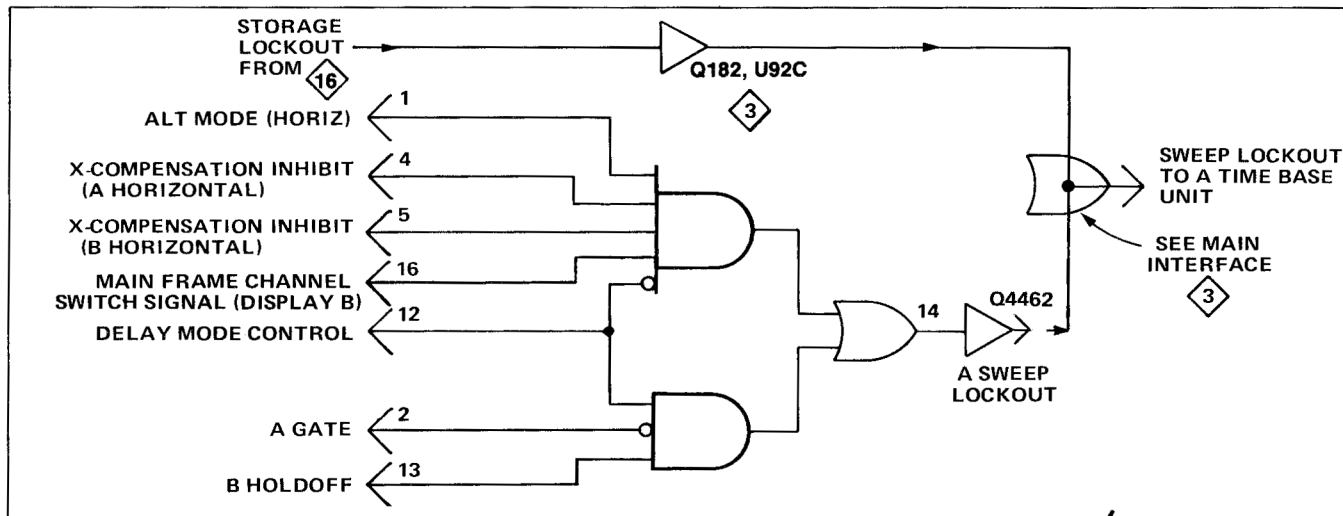

(A) U4428A

(B)

INPUT							OUTPUT
ALT MODE (HORIZ)	A GATE	X-COMPENSATION INHIBIT (A HORIZONTAL)	X-COMPENSATION INHIBIT (B HORIZONTAL)	DELAY MODE CONTROL	B HOLDOFF	DISPLAY B	LOCKOUT
1	2	4	5	12	13	16	14
HI	Φ	HI	HI	LO	Φ	HI	HI
Φ	LO	Φ	Φ	HI	HI	Φ	HI
ALL OTHER COMBINATIONS							LO

Φ = HAS NO EFFECT IN THIS CASE

5880-3

Figure 4-5. (A) Logic diagram for A Sweep Lockout Stage; (B) Table of input/output combinations.

http://manoman.sqhill.com

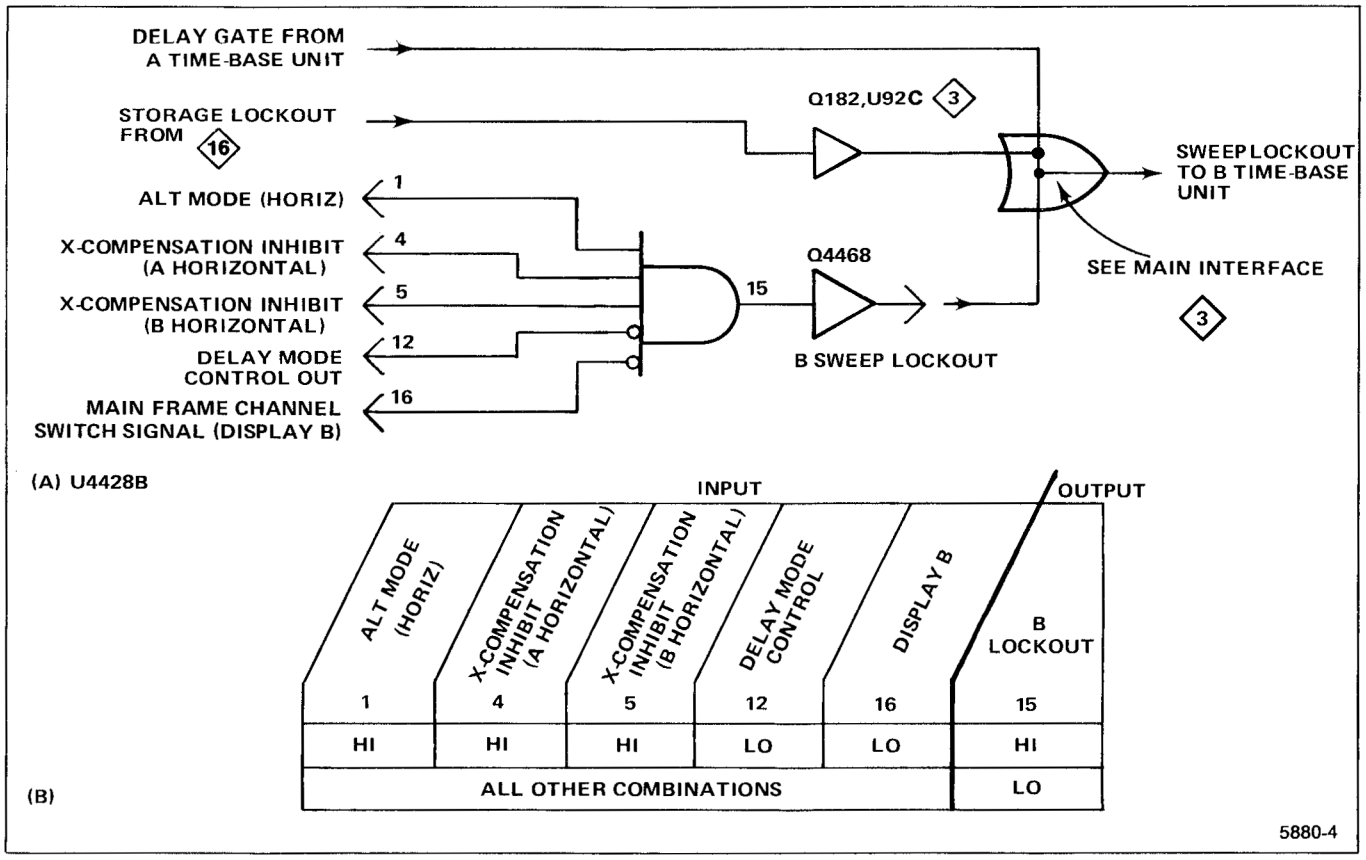

Figure 4-6. (A) Logic diagram for B Sweep Lockout stage; (B) Table of input/output combinations.

The Alternate Pulse is produced at the end of either sweep, depending upon the operating conditions as shown in Figure 4-7B. The holdoff gate produced at the end of the sweep by the respective time-base unit is differentiated by either C4420 or C4423 to provide a positive-going pulse to pin 6 or 9 of U4428.

In Figure 4-7A, note the resistors shown connected to pins 6 and 9. These resistors, which are internal to the IC, hold the levels at pin 6 and 9 LO unless a HI level is applied to the corresponding input. Since the holdoff gate is capacitively-coupled to pins 6 and 9, these inputs are at the LO level except when a differentiated A or B Holdoff gate is received.

The following discussions describe the operation of the Alternate Pulse stage in relation to the various combinations of input conditions shown in Figure 4-7B.

1. A (Only) Mode. An Alternate Pulse is produced at the end of each A sweep when the HORIZONTAL MODE switch is set to the A position.

2. B (Only) Mode. In the B position of the HORIZONTAL MODE switch, an Alternate Pulse is produced at the end of each B sweep. (A time-base must be in independent, non-delayed mode.)

3. Alt or Chop Mode. When the HORIZONTAL MODE switch is set to ALT or CHOP (A time-base must be in independent, non-delayed mode), an Alternate Pulse is produced at the end of each sweep. For example, an Alternate Pulse is produced at the end of the A sweep, then at the end of the B sweep, again at the end of the A sweep, etc. Although Alternate Pulses are produced in the CHOP horizontal mode, they are not used in this instrument.

http://manoman.sqhill.com

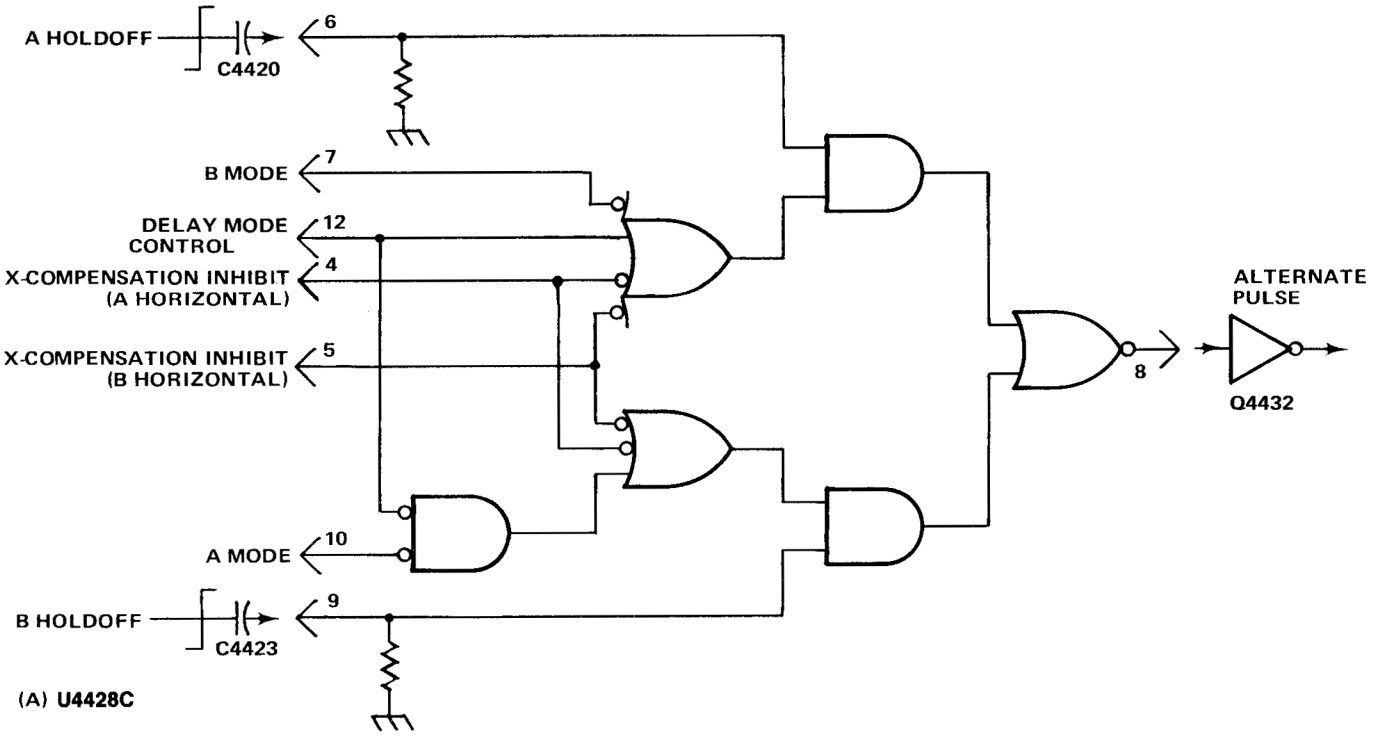

(A) **U4428C**

INPUT							OUTPUT	
X-COMPENSATION INHIBIT (A HORIZONTAL) 4	X-COMPENSATION INHIBIT (B HORIZONTAL) 5	A HOLDOFF 6	B MODE 7	B HOLDOFF 9	A MODE 10	DELAY MODE CONTROL 12	TIME-BASE WHICH IS SOURCE OF ALTERNATE PULSE 8[2]	HORIZONTAL CONDITIONS
HI	Φ	HI[1]	LO	Φ	HI	Φ	A	A ONLY
Φ	HI	Φ	HI	HI[1]	LO	LO	B	B ONLY
HI	HI	HI[1]	LO	HI[1]	LO	LO	A AND B	ALT OR CHOP
HI	HI	HI[1]	Φ	Φ	Φ	HI	A	A DELAYS B
HI	LO	HI[1]	LO	LO	Φ	Φ	A	A WITH VERTICAL UNIT IN B COMPARTMENT
LO	HI	LO	Φ	HI[1]	LO	LO	B	B WITH VERTICAL UNIT IN A COMPARTMENT
ALL OTHER COMBINATIONS							NO OUTPUT PULSE (LO AT OUTPUT)	

Φ = HAS NO EFFECT IN THIS CASE

[1] POSITIVE-GOING PULSE. WHERE BOTH A AND B HOLDOFF ARE REQUIRED TO BE HI, A HI AT EITHER INPUT PRODUCES AN ALTERNATE PULSE.

[2] NEGATIVE-GOING PULSE.

(B)

5880-5

Figure 4-7. (A) Logic diagram for Alternate Pulse Generator stage; (B) Table of input/output combinations.

http://manoman.sqhill.com

4. Delayed Sweep (A Delays B). When the A time-base unit is set for delayed, the operation of the Alternate Pulse Stage is changed so an Alternate Pulse is produced only at the end of the A sweep, even when the HORIZONTAL MODE switch is set to B. This is necessary since the A time-base establishes the amount of delay time for the B time-base unit whenever it is displayed.

5. Amplifier Unit in Horizontal Compartment. When an amplifier unit is installed in either of the horizontal plug-in compartments, the Alternate Pulse can be produced only from the remaining time-base unit. If amplifier units are installed in both horizontal compartments, an Alternate Pulse is not produced since there are no time-base units to produce a holdoff pulse.

Z-Axis Logic

Figure 4-8A shows a logic diagram of the Z-Axis Logic stage. Notice the current-driven inputs as indicated by the current generator symbols at the associated inputs. An input/output table for the Z-Axis Logic stage is given in Figure 4-8B.

The Z-Axis Logic stage produces an output current signal at pin 8 of U4494 which sets the intensity of the crt display except for the readout display which is controlled by the Readout System. The output current at pin 8 is determined by the setting of the A or B INTENSITY controls, the conditions of various logic gates, and by an external Z-Axis signal. The input current from the A and B INTENSITY controls is switched so the output current matches the horizontal display. The Vertical Chopped Blanking, Horizontal Chopped Blanking, and readout blanking signals are applied to this stage to block the output current and blank the crt display for vertical chopping, horizontal chopping, or during a readout display.

The Z-Axis Logic stage is current-driven at all inputs except pins 5 and 15. The current at pins 1, 2, and 16 is variable from zero to four milliamp and is determined by the applicable current source to control the output current at pin 8.

The Vertical Chopped Blanking signal connected to pin 7, and the Horizontal Chopped Blanking connected to both pins 6 and 7 through Q4336, CR4487, CR4488, enable or disable this stage to control all output current. Quiescently, the level at pins 6 and 7 is HI so that the intensity current from pins 1, 2, 9, and 16 can pass to the output. However, pin 7 goes LO during Vertical Chopped Blanking and both pins 6 and 7 go LO for Horizontal Chopped Blanking or during a readout display. This blocks the output current and the crt is blanked. The Vertical Chopped Blanking signal is connected to pin 7 of U4494 directly from pin 4 of U4320. The Horizontal Chopped Blanking signal is connected to U4494 from pin 4 of U4340 through LR4338, Q4336, CR4487, and CR4488. Notice that this signal is connected to the collector of Q4336. This transistor is normally operating in the saturated condition, and the HI Horizontal Chopped Blanking level from U4340 is the collector source voltage. When the Horizontal Chopped Blanking level goes LO, the current through Q4336 drops to produce a corresponding LO level at its emitter. This level is connected to pins 6 and 7 of U4494 through CR4488 and CR4487 respectively.

Transistor Q4336 also controls the levels at pins 6 and 7 for readout displays. The Z-Axis Inhibit command from the Readout System is connected to the base of Q4336 through VR4334 and R4335. This level is normally HI, so Q4336 operates as controlled by the Horizontal Chopped Blanking level at its collector. When a readout display is to be presented, the Z-Axis Inhibit command drops LO and this level is coupled to the base of Q4336 through VR4334. Transistor Q4336 is reverse biased to produce a LO level at its emitter. This level is coupled to pins 6 and 7 of U4494 through CR4487 and CR4488 to block the Z-Axis Logic output current during the readout display. (The intensity of the readout display is determined by a separate READOUT intensity level connected directly to the Z-Axis Amplifier; see CRT Circuit description.) Diode CR4486 clamps the emitter of Q4336 at about -0.6 volt when the transistor is off.

Intensity limiting is provided for high crt beam currents at slow sweep rates and X-Y operation by the Intensity Limit input. Quiescently, Q4474 is reverse biased; resistors R4474, R4481, and R4485 establish the current at pins 6 and 10 of U4494. When the Intensity Limit input is connected to ground in the plug-in units for slow sweep rates and amplifier operation, the emitter of Q4474 is grounded through CR4472. Transistor Q4474 takes current from pins 6 and 10 of U4494 to limit the output current from this stage. Z-Axis Level adjustment R4480 sets the correct operating levels for this stage.

The A INTENSITY control sets the output current level when the A Gate at pin 14 is HI and the main frame channel switch signal (Display B) at pin 15 is LO. Whenever the A Gate level goes LO indicating that the A sweep is complete or the Display B goes HI indicating that the B sweep is being displayed, the A INTENSITY current is blocked. The current from the A INTENSITY control (located on diagram 15) is connected to pin 16 through R4496.

In the delayed mode, current is added to the A INTENSITY current during the A-sweep time to intensify a portion of the trace. This intensified portion is coincident with the B-sweep time to provide an indication of which portion of the A sweep is displayed in the delayed mode. The A intensified current is supplied to pin 2 of U4494 from the A INTENSITY

http://manoman.sqhill.com

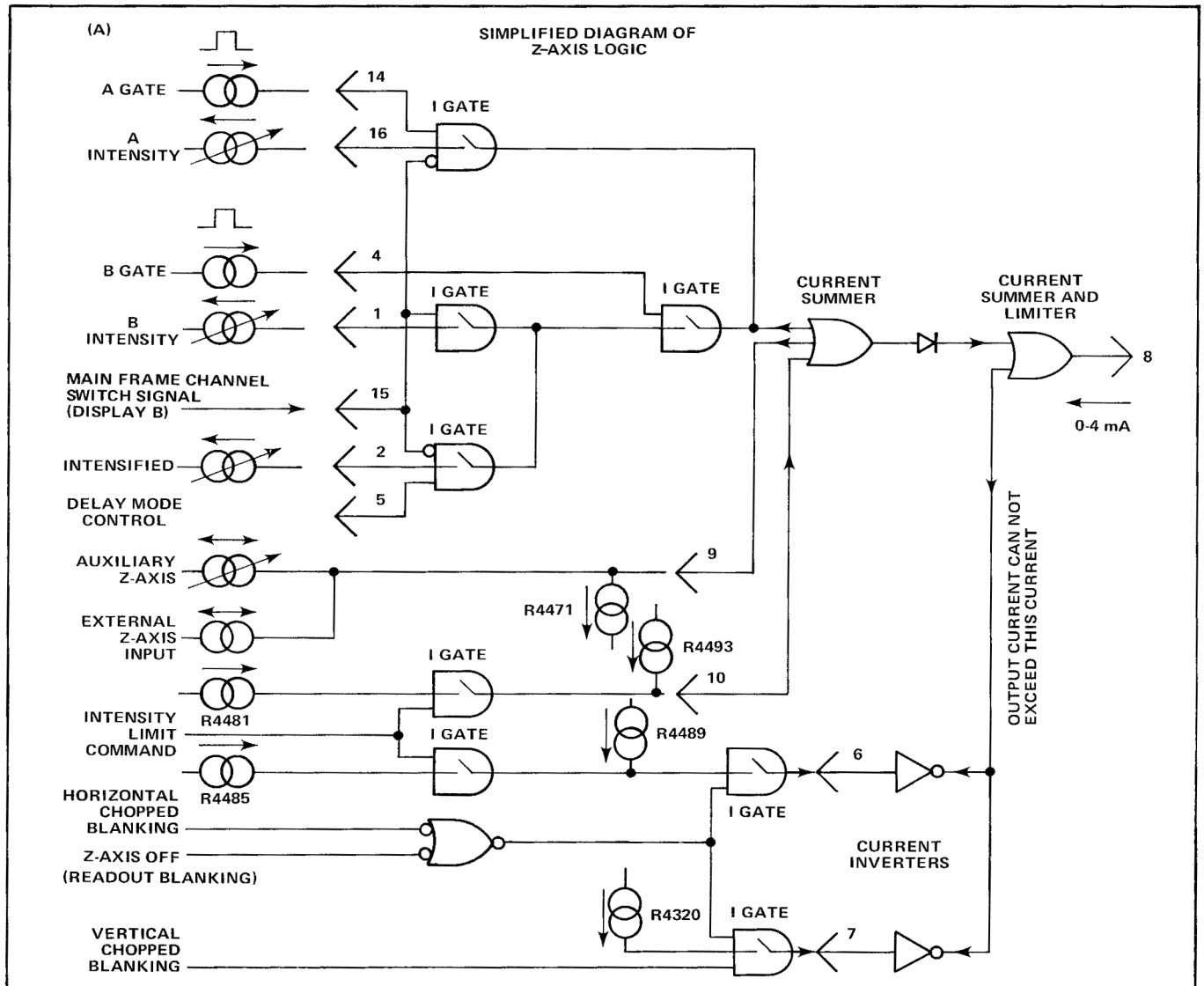

(B)

A INTENSITY 16	B INTENSITY 1	INTENSIFIED 2	A GATE 14	B GATE 4	DELAY MODE CONTROL 5	(DISPLAY B) 15	Z-AXIS SIGNAL 8	SOURCE OF Z-AXIS SIGNAL
VAR	Φ	Φ	HI	Φ	LO	LO	VAR	A INTENSITY
VAR	Φ	Φ	HI	LO	HI	LO	VAR	A INTENSITY
VAR	Φ	VAR	HI	HI	HI	LO	VAR	A INTENSITY PLUS INTENSIFIED
Φ	VAR	Φ	Φ	HI	Φ	HI	VAR	B INTENSITY
OTHER COMBINATIONS							LO	NO OUTPUT

HI = MAX VOLTAGE OR CURRENT
LO = MIN VOLTAGE OR CURRENT
VAR = VARIABLE CURRENT, 0 to 4 mA

Φ = HAS NO EFFECT

5880-6

Figure 4-8. (A) Logic diagram for Z-Axis Logic stage; (B) Table of input/output combinations.

http://manoman.sqhill.com

control through R4497. With this configuration, the intensified current increases as the A INTENSITY control setting is advanced to provide a proportional intensity increase in the intensified zone as the overall A-sweep intensity increases. Therefore, the intensified zone is more readily visible at high intensity levels. The intensified current is added to the A INTENSITY current to produce an intensified zone on the A sweep under the following conditions: HI A Gate level at pin 14, LO Display B level at pin 15, HI B Gate level at pin 4, and HI Delay Mode Control level at pin 5.

The B INTENSITY control determines the output current when the B Gate level at pin 4 and the Display B at pin 15 are both HI. The current from the B INTENSITY control (diagram 15) is connected to the Z-Axis Logic stage through R4498.

The current levels established by the intensity controls can be altered by the Auxiliary Z-Axis current level at pin 9. The current at this pin can come from the Z-AXIS INPUT connector on the rear panel or from any of the plug-in compartments. This current either increases or decreases (depending on polarity) the output current to modulate the intensity of the display. Input from the Z-AXIS INPUT connector allows the trace to be modulated by external signals. The Auxiliary Z-Axis inputs from the plug-in compartments (see diagram 3) allow special-purpose plug-in units to modulate the display intensity. Diodes CR4473 and CR4474 limit the maximum voltage change at pin 9 to about + and -0.6 volt to protect the Z-Axis Logic stage if an excessive voltage is applied to the Z AXIS INPUT connector.

Horizontal Binary

The Horizontal Binary stage produces the Main Frame Channel Switch Signal (Display B) to determine which horizontal unit provides the sweep display on the crt. When this level is HI, the B HORIZ unit is displayed; when it is LO, the A HORIZ unit is displayed.

The Display B signal is used in the following stages within the Logic circuit: Horizontal Logic (A and B Sweep Inhibit), Z-Axis Logic, Vertical Binary, and Trace Separation. In addition, it is connected to the following circuits elsewhere in the instrument to indicate which horizontal unit is to be displayed: Main Interface (A and B HORIZ plug-in compartments), Horizontal Interface (for horizontal channel selection), and the Auto Focus Amplifier.

Figure 4-9A shows a logic diagram for the Horizontal Binary Stage. An input/output table showing the conditions for each position of the HORIZONTAL MODE switch is shown in Figure 4-9B. Notice that the levels at pins 3, 4, 7, and 10 of U4358 are determined by the HORIZONTAL MODE switch (on Logic diagram 4). This switch indicates which horizontal mode has been selected by providing a HI output level on only one of four output lines; the remaining lines are LO.

The Horizontal Binary stage operates as follows for each position of the HORIZONTAL MODE switch (refer to Figure 4-9B for input/output conditions):

1. A Mode. When the HORIZONTAL MODE switch is set to A, Display B at pin 6 of U4358 is LO to indicate to all circuits that the A HORIZ unit is to be displayed.

2. B Mode. Selecting the B HORIZONTAL MODE provides a HI Display B signal to all circuits.

3. CHOP Mode. In the CHOP position of the HORIZONTAL MODE switch, the Display B signal switches between HI and LO levels to produce a display that switches between the A and B HORIZ units at a 0.2 megahertz rate. The repetition rate of Display B in this mode is determined by the Horizontal Chopped Blanking pulse (see Chop Counter description). Each time the Horizontal Chopped Blanking pulse at pin 1 drops LO, the output at pin 6 switches to the opposite state.

4. ALT Mode. For ALT HORIZONTAL MODE operation, the Display B signal switches to the opposite state each time the negative portion of the Alternate Pulse is received from the Horizontal Logic stage. Repetition rate of Display B in this mode is one-half the repetition rate of the Alternate Pulse applied to pin 8.

Vertical Binary

The Vertical Binary stage produces the Vertical Alternate Command to determine which vertical unit is to be displayed when the VERTICAL MODE switch is set for ALT. When this output level is HI, the RIGHT VERT unit is displayed; when it is LO, the LEFT VERT unit is displayed. In the ALT or CHOP positions of the HORIZONTAL MODE switch (non-delayed operation only), the output of this stage is slaved to the output of the Horizontal Binary stage so that the Vertical Alternate Command is always HI when Display B is LO, and vice versa. This action allows slaved-alternate operation (sweep-slaving) in the ALT position of the VERTICAL MODE switch and the ALT or CHOP positions of the HORIZONTAL MODE switch whereby the LEFT VERT unit is always displayed at the sweep rate of the B time-base and the RIGHT VERT unit is displayed at the sweep rate of the A time-base. Thus, slaved-alternate operation can simulate dual-beam operation for repetitive sweeps.

When the A time-base unit is set to the delaying mode, the repetition rate of the Vertical Alternate Command is one-

http://manoman.sqhill.com

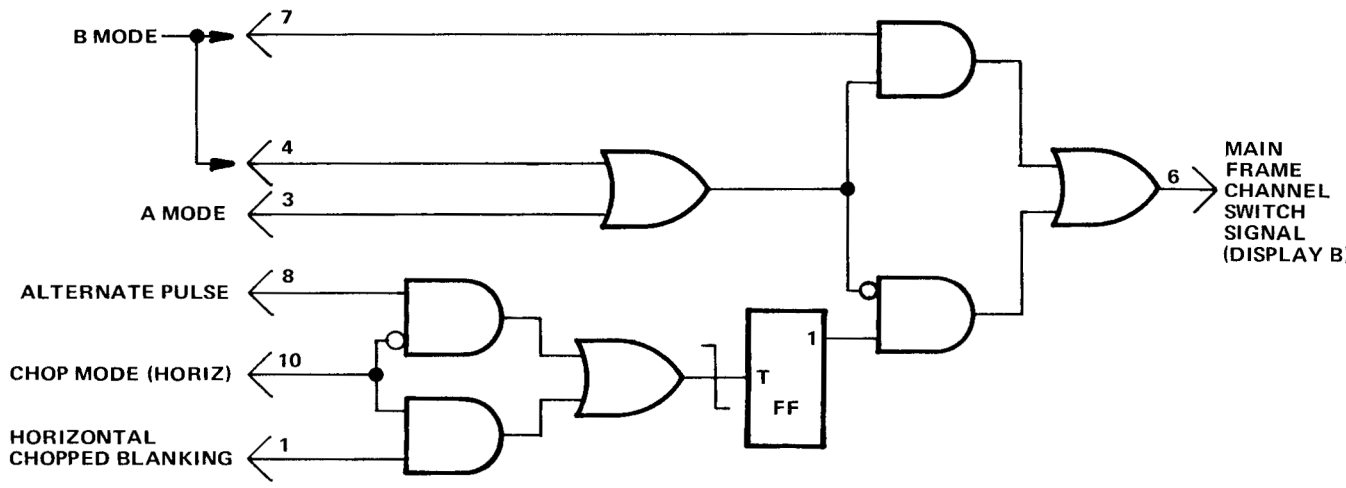

(A) U4358

INPUT						OUTPUT	
HORIZONTAL CHOPPED BLANKING	A MODE	B MODE	B MODE	ALTERNATE PULSE	CHOP MODE (HORIZ)	DISPLAY B	
1	3	4	7	8	10	6	HORIZONTAL DISPLAY
Φ	HI	LO	LO	Φ	LO	LO	A HORIZONTAL UNIT
Φ	LO	HI	HI	Φ	LO	HI	B HORIZONTAL UNIT
LO[1]	LO	LO	LO	Φ	HI	n+1[2]	CHOP BETWEEN A AND B
Φ	LO	LO	LO	LO[1]	LO	n+1[3]	ALTERNATE BETWEEN A AND B

Φ = HAS NO EFFECT IN THIS CASE

n+1 = IF OUTPUT IS LO PRIOR TO LO[1], IT GOES HI, AND VICE VERSA

[1] ACTUATED BY NEGATIVE-GOING EDGE.

[2] REPETITION RATE ONE-HALF HORIZONTAL CHOPPED BLANKING RATE.

(B) [3] REPETITION RATE ONE-HALF ALTERNATE PULSE RATE.

(1195-11) 1988-36

Figure 4-9. (A) Logic diagram for Horizontal Binary stage; (B) Table of input/output combinations.

half the repetition rate of Display B. This results in each vertical unit being displayed first against the A time-base unit (delaying), then the B time-base unit (delayed), before the display is switched to the other vertical unit.

The Vertical Alternate Command is used in the Plug-In Binary and Vertical Mode Logic stages. This stage uses the same type of IC as the Horizontal Binary stage. Notice the Display A level at pin 7. This input is the inverse of the Display B level at pin 8. Therefore, the Display A level is always HI when the Display B level is LO, and vice versa (Q4364 generates the Display A level). Also, notice the line connected to pin 4 of the Vertical Binary U4368. The level at pin 4 is generated by Q4424 and is HI only when the HORIZONTAL MODE switch is set for ALT or CHOP and the A time base unit is set for nondelayed operation. The Vertical Binary uses the information at pin 4 for correct slaving of the Vertical Alternate Command to the Display B signal (necessary for slaved-alternate operation).

http://manoman.sqhill.com

A logic diagram of the Vertical Binary stage is shown in Figure 4-10A. Several logic functions in this stage are performed by logic devices made up of discrete components. The components that make up these logic devices are identified on the logic diagram. An input/output table for the Vertical Binary stage is given in Figure 4-10B.

The following discussions describe operation of the Vertical Binary stage in relation to the modes of operation that can occur.

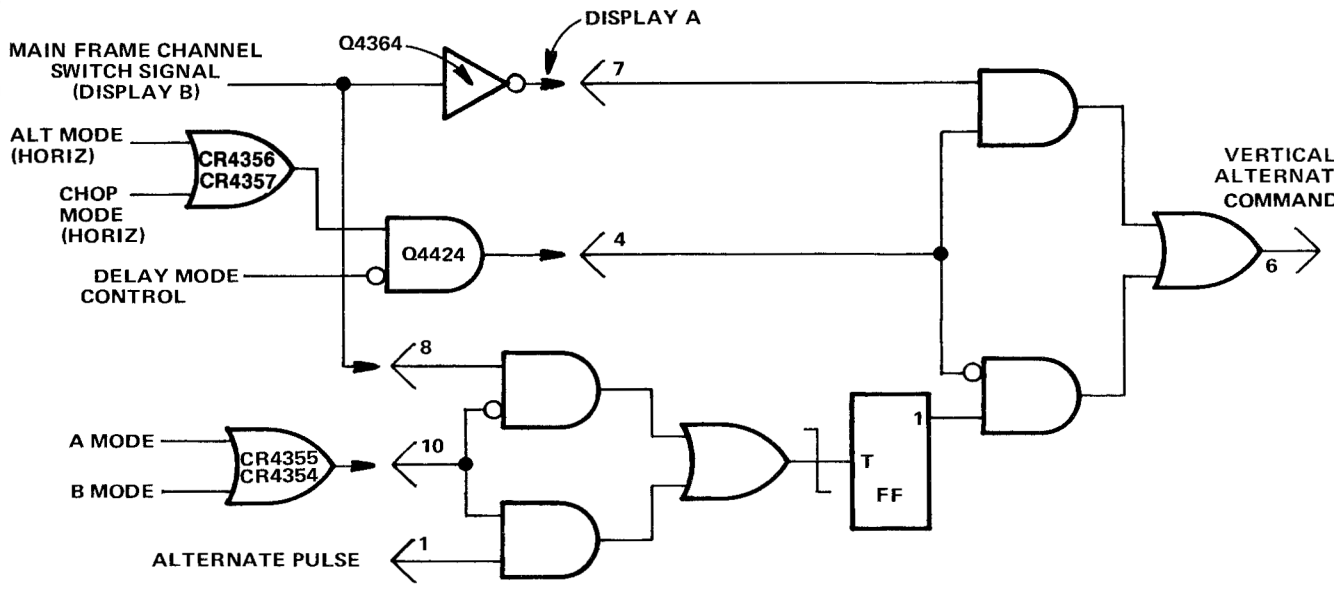

(A) U4368

INPUT					OUTPUT	
ALTERNATE PULSE	ALT OR CHOP MODE (HORIZ) AND NOT DELAYED MODE	DISPLAY A	DISPLAY B	A OR B MODE	VERTICAL ALTERNATE COMMAND	
1	4	7	8	10	6	HORIZONTAL MODE
LO[1]	LO	Φ	Φ	HI	n+1[2]	A OR B
Φ	HI	HI	LO	LO	HI	DISPLAY RIGHT } ALT OR CHOP, NON-DELAYED MODE (SWEEP-SLAVING)
Φ	HI	LO	HI	LO	LO	DISPLAY LEFT } ALT OR CHOP, NON-DELAYED MODE (SWEEP-SLAVING)
Φ	LO	Φ	LO[1]	LO	n+1[3]	ALT OR CHOP, DELAYED MODE

Φ = HAS NO EFFECT IN THIS CASE.

n+1 =IF OUTPUT IS LO PRIOR TO LO[1] IT GOES HI, AND VICE VERSA.

[1] ACTUATED BY NEGATIVE-GOING EDGE.

[2] REPETITION RATE ONE-HALF ALTERNATE PULSE RATE.

[3] REPETITION RATE ONE-HALF DISPLAY B RATE.

(B) 5880-7

Figure 4-10. (A) Logic diagram for Vertical Binary stage; (B) Table of input/output combinations.

http://manoman.sqhill.com

1. A OR B Mode. When the HORIZONTAL MODE switch is set to either A or B, the Vertical Alternate command switches to the opposite state each time an Alternate Pulse is received from the Horizontal Logic stage. Repetition rate of the Vertical Alternate Command in this mode is one-half the repetition rate of the Alternate Pulse. The input conditions for these modes are:

Pin 1 LO — Alternate Pulse generated by the Horizontal Logic stage goes negative.

Pin 4 LO — HORIZONTAL MODE switch in any position except ALT, CHOP, or when the A time-base unit is set for delayed sweep.

Pin 10 HI — HORIZONTAL MODE switch set to A or B.

2. ALT OR CHOP Mode (HORIZ) — Nondelayed. In the ALT or CHOP positions of the HORIZONTAL MODE switch, the output level at pin 6 is the same as the Display A level at pin 7. The display A level is produced by inverting the Display B level from the Horizontal Binary stage. Therefore, the repetition rate of the output signal is the same as the Display B signal. The result (with the VERTICAL MODE switch set to ALT or CHOP and the A time-base unit set for nondelayed operation) is that the RIGHT VERT unit is always displayed at the sweep rate of the A time-base unit, and the LEFT VERT unit at the sweep rate of the B time-base unit (slaved-alternate operation or sweep slaving). The input conditions to provide a HI output level so that the RIGHT VERT unit can be displayed at the A sweep rate are:

Pin 4 HI — HORIZONTAL MODE switch set to ALT or CHOP with nondelayed sweep.

Pin 7 HI — A sweep is to be displayed (Display B LO).

Pin 10 LO — HORIZONTAL MODE switch set to any position except A or B.

The input conditions required to provide a LO output level to display the LEFT VERT unit at the B sweep rate are:

Pin 4 HI — HORIZONTAL MODE switch set to ALT or CHOP with nondelayed sweep.

Pin 7 LO — B sweep is to be displayed (Display B HI).

Pin 10 LO — HORIZONTAL MODE switch set to any position except A or B.

3. ALT OR CHOP Mode (HORIZ) — Delayed. If the A time-base unit is set to the delayed mode when the HORIZONTAL MODE switch is set to either ALT or CHOP, the operation of the stage is changed from that discussed above. Now, the Vertical Alternate Command switches between the HI and LO states at a rate that is one-half the repetition rate of the Display B signal. The resultant crt display in the ALT position of the VERTICAL MODE switch allows the RIGHT VERT unit to be displayed first against the A sweep (delaying) and then against the B sweep (delayed). Then the display switches to the LEFT VERT unit and is displayed consecutively against the A and B sweeps in the same manner. The input conditions for this mode of operation are:

Pin 4 LO — A time-base unit set for delayed operation.

Pin 8 HI or LO — Vertical Alternate command changes state at HI to LO transition of Display B.

Pin 10 LO — HORIZONTAL MODE switch set to any position except A or B.

Plug-In binary

The Plug-In Binary stage produces the Alternate Drive signal to alternate dual-trace units. This stage uses the same type of integrated circuit as the Horizontal Binary and Vertical Binary stages. Figure 4-11A shows a logic diagram of the Plug-In Binary stage. An input/output table for this stage is given in Figure 4-11B.

When the Alternate Drive level at pin 6 of U4412 is HI and the plug-in unit is set for alternate operation, Channel 2 of the dual-trace unit is displayed. When it is LO, channel 1 is displayed. The repetition rate of the Plug-In Alternate Drive signal is determined by the setting of the VERTICAL MODE switch. For all positions of the VERTICAL MODE switch except ALT, the Plug-In Alternate Drive level is the same as the Vertical Alternate Command from the Vertical Binary stage. Since the Vertical Alternate Command is derived directly from the Display B signal, the two channels of a dual-trace vertical unit are allowed to be slaved to the time-base units (nondelayed, dual-sweep horizontal modes only) in the same manner as previously described for slaved-alternate operation between the vertical and time-base units. The resultant crt presentation (when the dual-trace unit is set for alternate operation) displays the Channel 1 trace at the sweep rate of the B time-base unit and Channel 2 trace at the sweep rate of the A time-base unit.

The Plug-In Alternate Drive switches from HI to LO as the Display B signal (from the Horizontal Binary stage) switches from LO to HI, and vice versa. When the VERTICAL MODE switch is set to ALT, the Vertical Alternate Command from the Vertical Binary stage switches the vertical display between the two vertical units. However, if either of the vertical plug-in units are dual-trace units, they can be operated in the alternate mode also. To provide a switching command to these units, the Plug-In Binary stage produces an output signal with a repetition rate that is one-half the repetition rate of the Vertical Alternate Command. The sequence of operation when two dual-trace vertical units are installed in the vertical plug-in compartments and both are set for alternate operation is as follows (VERTICAL MODE and HORIZONTAL MODE switches set to ALT): 1) Channel 1 of LEFT VERT unit at sweep rate of B time-base unit, 2) Channel 1 of RIGHT VERT unit at sweep rate of A time-base unit, 3) Channel 2 of LEFT VERT unit at sweep rate of

http://manoman.sqhill.com

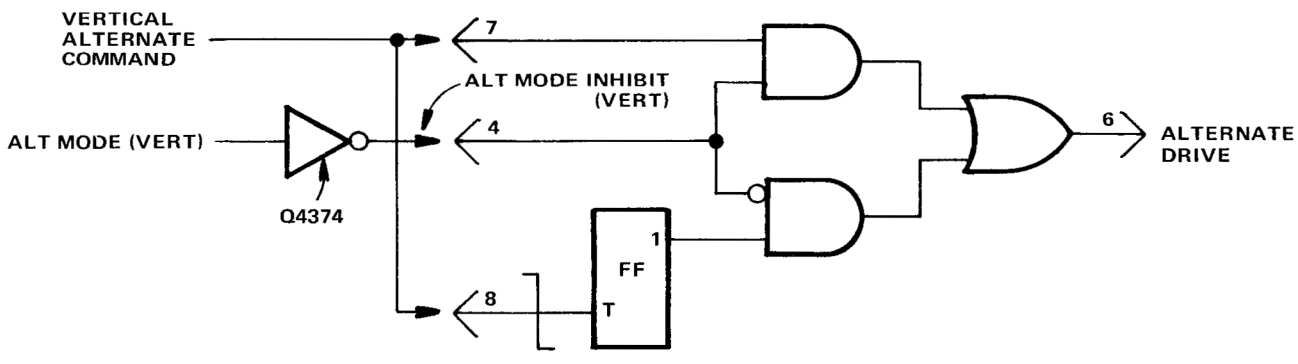

(A) U4412

INPUT			OUTPUT	
ALT MODE INHIBIT (VERT)	VERTICAL ALTERNATE COMMAND	VERTICAL ALTERNATE COMMAND	ALTERNATE DRIVE	
4	7	8	6	COMMENTS
LO	Φ	LO[1]	n+1[2]	ALT VERTICAL MODE
HI	LO	Φ	LO	CHANNEL 1 DISPLAYED } ALL VERTICAL MODES EXCEPT ALT PROVIDE SWEEP-SLAVING FOR NON-DELAYED DUAL-SWEEP OPERATION.
HI	HI	Φ	HI	CHANNEL 2 DISPLAYED }

Φ = HAS NO EFFECT IN THIS CASE.

n+1 = IF OUTPUT IS LO PRIOR TO LO[1] IT GOES HI, AND VICE VERSA.

[1] ACTUATED BY NEGATIVE-GOING EDGE.

(B) [2] REPETITION RATE ONE-HALF VERTICAL ALTERNATE COMMAND RATE.

(1195-15) 1988-40

Figure 4-11. (A) Logic diagram for Plug-In Binary stage; (B) Table of input/output combinations.

B time-base unit, 4) Channel 2 of RIGHT VERT unit at sweep rate of A time-base unit. Notice that under these conditions, both channels of the LEFT VERT unit are displayed at the B-sweep rate and that both channels of the RIGHT VERT unit are displayed at the A-sweep rate. Input conditions when the VERTICAL MODE switch is set to ALT are:

Pin 4 LO — VERTICAL MODE switch set to ALT.

Pin 8 HI or LO — Plug-In Alternate Drive signal changes state at HI to LO transition of Vertical Alternate Command pulse.

Clock Generator

Part of integrated circuit U4320 along with the external components shown in Figure 4-12A make up the Clock Generator stage. R1, Q1, Q2, and Q3 represent an equivalent circuit within Q4320. This circuit along with discrete components C4314-R4312-R4313-R4314 comprise a two-megahertz free-running oscillator that provides a timing (clock) signal used to synchronize the vertical, horizontal, and plug-in chopping modes.

http://manoman.sqhill.com

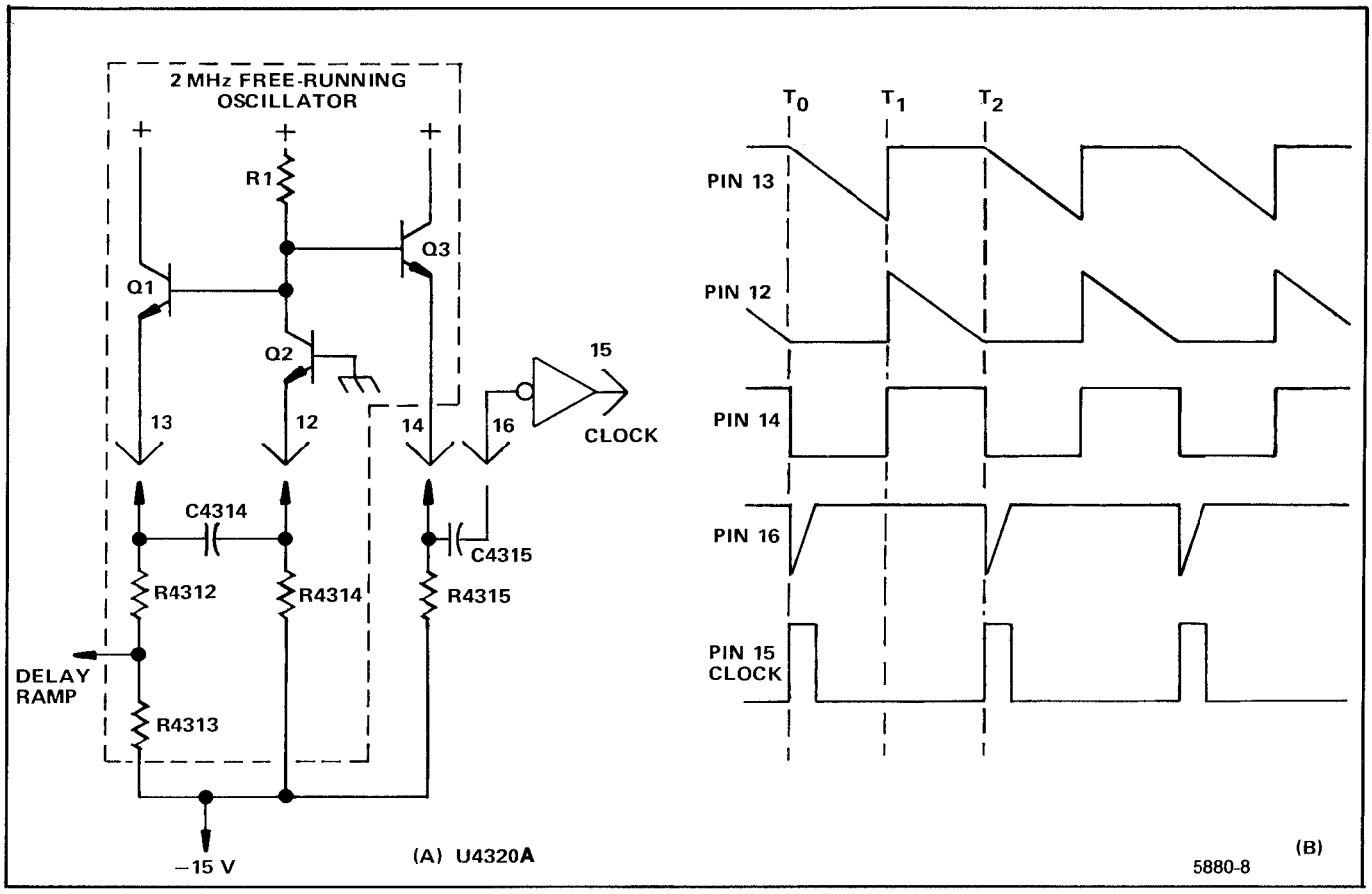

Figure 4-12. (A) Diagram of Clock Generator stage; (B) Idealized waveforms for Clock Generator stage.

This stage operates as follows: Assume that Q2 is conducting and Q1 is off. The collector current of Q2 produces a voltage drop across R1 to turn off Q1. This negative level at the collector of Q2 is also connected to pin 14 through Q3 (see waveforms in Figure 4-12B at time T_0). Since there is no current through Q1, C4314 begins to charge towards −15 volts through R4312-R4313. The emitter of Q1 goes negative as C4314 charges, until it reaches a level about 0.6 volts more negative than the level at its base. Then Q1 is forward biased and its emitter rapidly rises positive (see Time T_1 on waveforms). Since C4314 cannot change its charge instantaneously, the sudden change in voltage at the emitter of Q1 also pulls the emitter of Q2 positive to reverse-bias it. With Q2 reverse biased, its collector rises positive to produce a positive output level at pin 14.

Now, conditions are reversed. Since Q2 is reverse biased, there is no current through it. Therefore, C4314 can begin to discharge through R4314. The emitter level of Q2 follows the discharge of C4314, until it reaches a level of about 0.6 volt more negative than its base. Then Q2 is forward biased and its collector drops negative to reverse-bias Q1. The level at pin 14 drops negative to complete the cycle. Once again, C4314 begins to charge through R4312-R4313 to start the second cycle.

Two outputs are provided from this oscillator. The Delay Ramp signal from the junction of R4312-R4313 is connected to the Vertical Chopped Blanking stage. This signal has the same waveshape as shown by the waveform at pin 13; its slope is determined by the divider ratio between R4312-R4313. A wide-pulse train output is provided at pin 14. The frequency of this pulse train is determined by the overall RC relationship between C4314-R4312-R4313-R4314 and its duty cycle is determined by the ratio of R4312 and R4313 to R4314.

The pulse train at pin 14 is connected to pin 16 through C4315. Capacitor C4315, along with the internal resistance of U4320, differentiates the pulse train at pin 14 to produce a narrow negative-going pulse coincident with the falling edge of the pulse train (positive-going pulse coincident with rising edge has no effect on circuit operation). This negative-going pulse is connected to pin 15 through an inverter-shaper that is also part of U4320A. The output at pin 15 is a positive-going clock with a repetition rate of about two megahertz.

http://manoman.sqhill.com

Vertical Chopped Blanking

The Vertical Chopped Blanking stage is made up of the remainder of U4320. This stage determines if Vertical Chopped Blanking pulses are required, based upon the operating mode of the vertical system or the plug-in units (dual-trace units only). Vertical Chopped Blanking pulses are produced if: 1) VERTICAL MODE switch is set to CHOP; 2) Dual-trace vertical unit is operating in the chopped mode and is being displayed; 3) Dual-trace vertical unit operating in the chopped mode with the VERTICAL MODE switch set to ADD. The repetition rate of the negative-going Vertical Chopped Blanking pulse output at pin 4 is two megahertz for all of the above conditions as determined by the Clock Generator stage.

Figure 4-13 shows a logic diagram and an input/output table for the Vertical Chopped Blanking stage. Notice the comparator block on the diagram. The output of this comparator is determined by the relationship between the levels at its inputs. If pin 10 is more positive (HI) than the grounded input, the output is HI also: if it is more negative, the output is LO.

The Delay Ramp signal from the Clock Generator stage determines the repetition rate and pulse width of the Vertical Chopped Blanking pulses. The Delay Ramp applied to pin 10 starts to go negative from a level of about +1.1 volts coincident with the leading edge of the Clock pulse (see waveforms in Fig. 4-14). This results in a HI quiescent condition for the Vertical Chopped Blanking pulse. The slope of the negative-going Delay Ramp is determined by the Clock Generator stage. As it reaches a level slightly negative from ground, the Vertical Chopped Blanking pulse output level changes to the LO state and remains LO until the Delay Ramp goes HI again.

Notice the delay between the leading edge of the Clock pulse generated by U4320A, and the leading edge of the Vertical Chopped Blanking pulses. the amount of delay between the leading edges of these pulses is determined by the Delay Ramp applied to pin 10. This delay is necessary due to the delay line in the vertical deflection system. Otherwise, the trace blanking resulting from the Vertical Chopped Blanking pulse would not coincide with the switching between the displayed traces. The duty cycle of the wide pulse train produced in the Clock Generator stage determines the pulse width of the Vertical Chopped Blanking pulses (see Clock Generator description for more information).

Chop Counter

Chop Counter stage U4340 produces the Vertical Chopping Signal, the Plug-In Chop Drive, and the Horizontal Chopped Blanking signal. The Clock pulse produced by the Clock Generator stage provides the timing signal for this stage. A logic diagram of the Chop Counter stage is shown in Figure 4-15A. Details of operation for the flip-flops (FF) are shown in Table 4-1 at the front of this section. Idealized waveforms showing the timing relationship between the input and output signals for this stage are shown in Figure 4-15B.

The repetition rate of the output signals from this stage is determined by the setting of the HORIZONTAL MODE switch. When the HORIZONTAL MODE switch is set to any position except CHOP, the repetition rate of the Vertical Chopping Signal output at pin 1 is one megahertz (one-half Clock rate). This determines the switching between the LEFT and RIGHT VERT units when the VERTICAL MODE switch is set to CHOP. At the same time, the repetition rate of the Plug-In Chop Drive at pin 8 is 0.5 megahertz (one-fourth Clock rate). This provides a chopping signal for switching between the two channels of dual-trace vertical units. The relationship between these output signals and the Clock input is shown by the waveforms in Figure 4-15B during the time between T_0 and T_1. During this time, the level at pin 4 remains HI.

When the HORIZONTAL MODE switch is set to CHOP, the basic repetition rate of the Vertical Chopping Signal and Plug-In Chop Drive is altered. For example, if the HORIZONTAL MODE switch is changed to the CHOP position at time T_1 (see Fig. 4-15B), a HI level is applied to pin 6. This stage continues to produce outputs at pins 1 and 8 in the normal manner until both outputs are HI. (See time T_2; this condition only occurs once every fifth Clock pulse and only when the HORIZONTAL MODE switch is set to CHOP.) When both of these outputs are HI, the next Clock pulse switches both outputs LO, and at the same time switches the Horizontal Chopped Blanking to the LO level.

This change at time T_2 does not appear at pin 4 immediately, due to a delay network in the circuit. The delay is necessary to make the Horizontal Chopped Blanking coincide with the Vertical Chopped Blanking produced by U4320 and the switching between the displayed signals. (Compare bottom two waveforms of Fig. 4-15B; also see Vertical Chopped Blanking for further information.) After the delay time, the output level at pin 4 goes LO where it remains for about 0.5 microsecond which is equal to the period of the clock pulse (two-megahertz repetition rate).

The Horizontal Chopped Blanking time must be longer than the Vertical Chopped Blanking time, since it takes more time for the display to switch between horizontal units than between vertical units. During the time that the level at pin 4 is LO, the crt is blanked and the Vertical Chopping Signal and the Plug-In Chop Drive cannot change levels. The Clock pulse at T_3 changes only the Horizontal Chopped Blanking output at pin 4. The level on this pin goes HI after the delay time to unblank the crt.

http://manoman.sqhill.com

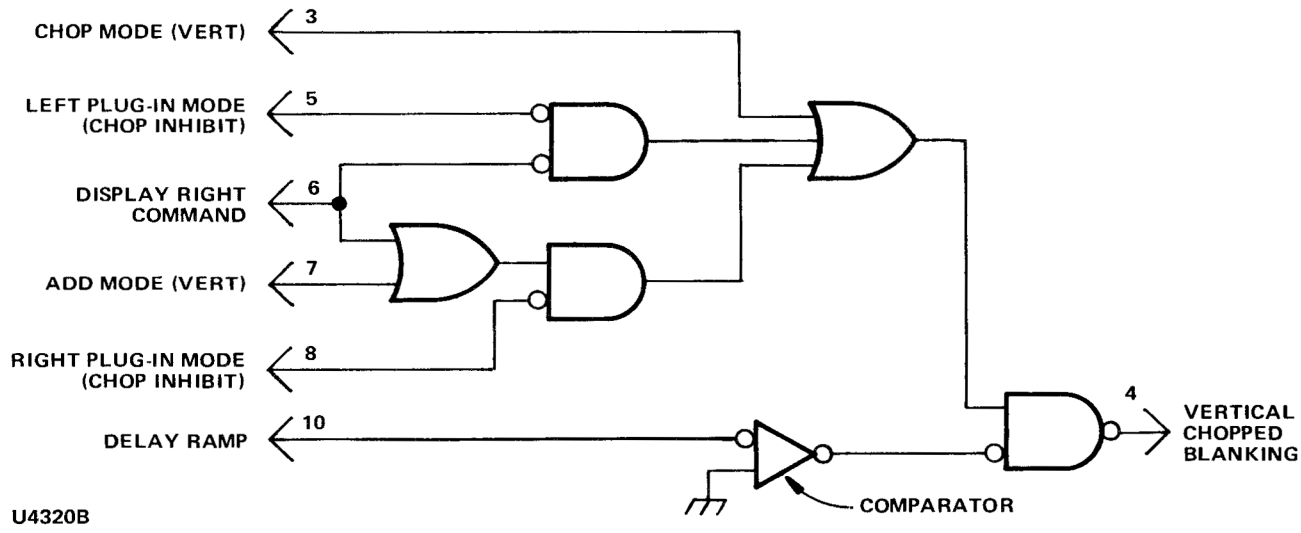

(A) U4320B

INPUT						OUTPUT	
CHOP MODE (VERT) 3	LEFT PLUG-IN MODE (CHOP INHIBIT) 5	DISPLAY RIGHT COMMAND 6	ADD MODE (VERT) 7	RIGHT PLUG-IN MODE (CHOP INHIBIT) 8	DELAY RAMP 10[1]	VERTICAL CHOPPED BLANKING 4[2]	CONDITIONS
HI	Φ	Φ	LO	Φ	LO	LO	CHOP MODE (VERT)
LO	LO	LO	LO	Φ	LO	LO	LEFT PLUG-IN CHOPPED
LO	Φ	HI	LO	LO	LO	LO	RIGHT PLUG-IN CHOPPED
LO	LO[3]	LO	HI	LO[3]	LO	LO	ADD MODE, LEFT OR RIGHT PLUG-IN CHOPPED
ALL OTHER COMBINATIONS						HI	NO VERTICAL CHOPPED BLANKING PULSES AT OUTPUT

Φ = HAS NO EFFECT IN THIS CASE

[1] RAMP SIGNAL; CONSIDERED LO WHEN MORE NEGATIVE THAN ABOUT ZERO VOLTS.

[2] NEGATIVE-GOING PULSE AT TWO MEGAHERTZ RATE.

(B) [3] PIN 5 CAN BE HI AND NOT AFFECT OPERATION IF PIN 8 IS LO, AND VICE VERSA.

(1195-17) 1988-42

Figure 4-13. (A) Logic diagram for Vertical Chopped Blanking stage; (B) Table of input/output combinations.

http://manoman.sqhill.com

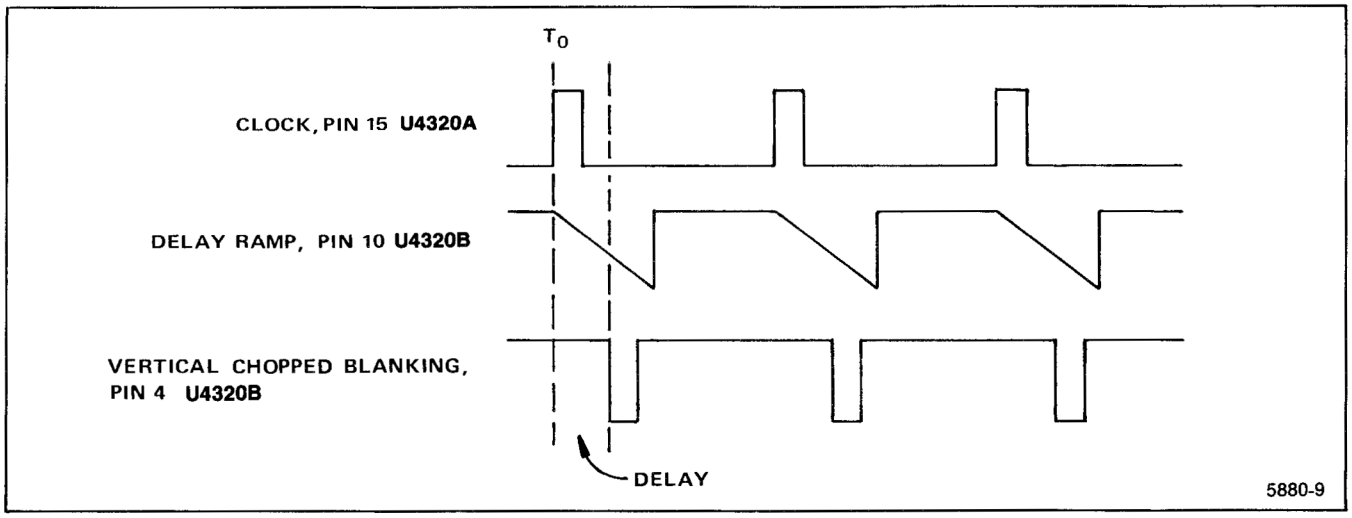

Figure 4-14. Idealized waveforms for Vertical Chopped Blanking stage.

For the next three Clock pulses, the Vertical Chopping Signal output and Plug-In Chop Drive operate in the normal manner. However, just prior to the fourth Clock pulse (time T_4), both outputs are again at their HI level. The fourth clock pulse at T_4 switches the output at pin 1, pin 8, and pin 4 (after delay) to the LO level to start the next cycle. Notice that a Horizontal Chopped Blanking pulse is produced at pin 4 with every fifth Clock pulse. Also notice that with the HORIZONTAL MODE switch set to CHOP, two complete cycles of the Vertical Chopping Signal are produced with each five Clock pulses (repetition rate two-fifths clock rate) and one complete cycle of the Plug-In Chop Drive for every five clock pulses (one-fifth clock rate). Notice that the large shaded area produced by the Horizontal Chopped Blanking pulse (see Fig. 4-15B) is not part of the display time (crt display blanked). However, about the same time segment is displayed from the vertical signal source with or without Horizontal Chopped Blanking, due to the change in repetition rate with the HORIZONTAL MODE switch set to CHOP.

The Vertical Chopping Signal at pin 1 of U4340 is connected to the Vertical Mode Logic stage (see following description) through L4342-R4342. This signal is HI when the RIGHT VERT unit is to be displayed and LO when the LEFT VERT unit is to be displayed. The Plug-In Chop Drive at pin 8 is connected to the plug-in units in the vertical compartments through L4344-R4344, via the Main Interface board. When this signal is HI, Channel 2 of the plug-in units can be displayed; when this level is LO, Channel 1 can be displayed. The Horizontal Chopped Blanking signal at pin 4 is connected through L4338-R4338 to the Horizontal Binary stage U4358, and to the Z-Axis Logic stage U4494 by way of Q4336. When this signal is HI, the crt is unblanked to display the selected signal. When it is LO, the crt is blanked to allow switching between the horizontal units.

Vertical Mode Logic

The Vertical Mode Logic stage is made up of discrete components CR4322-CR4323, CR4368-CR4369, and buffer Q4382-Q4392. These components develop the Main Frame Channel Switch signal (Display Right), which is connected to the Main Interface, Vertical Interface, and Trigger Selector circuits to indicate which vertical unit is to be displayed. When this output level is HI, the RIGHT VERT unit is displayed; when it is LO, the LEFT VERT unit is displayed. A logic diagram of the Vertical Mode Logic stage is shown in Figure 4-16. The discrete components that make up each logic function are identified.

The VERTICAL MODE switch shown on diagram 2 provides control levels to this stage. This switch provides a HI level on only one of five output lines to indicate the selected vertical mode; the remaining lines are LO. Notice that only four of the lines from the VERTICAL MODE switch are connected to the Logic circuit. Operation of this stage is as follows:

When the VERTICAL MODE switch is set to RIGHT, a HI level is connected to the base of Q4382 through R4321. This forward biases Q4382, and the positive-going level at its emitter is connected to the emitter of Q4392. The collector of Q4392 goes HI to indicate that the RIGHT VERT unit is to be displayed. For the CHOP position of the VERTICAL MODE switch, a HI level is applied to the anodes of CR4322-CR4323 through R4322. Both diodes are forward biased so that the Vertical Chopping Signal from pin 1 of U4340 can pass to the base of Q4382. This signal switches between the HI and LO levels at a one-megahertz rate and produces a corresponding Display Right output at the collector of Q4392. When the output is HI, the RIGHT VERT unit is displayed and when it switches to LO, the LEFT VERT unit is displayed.

http://manoman.sqhill.com

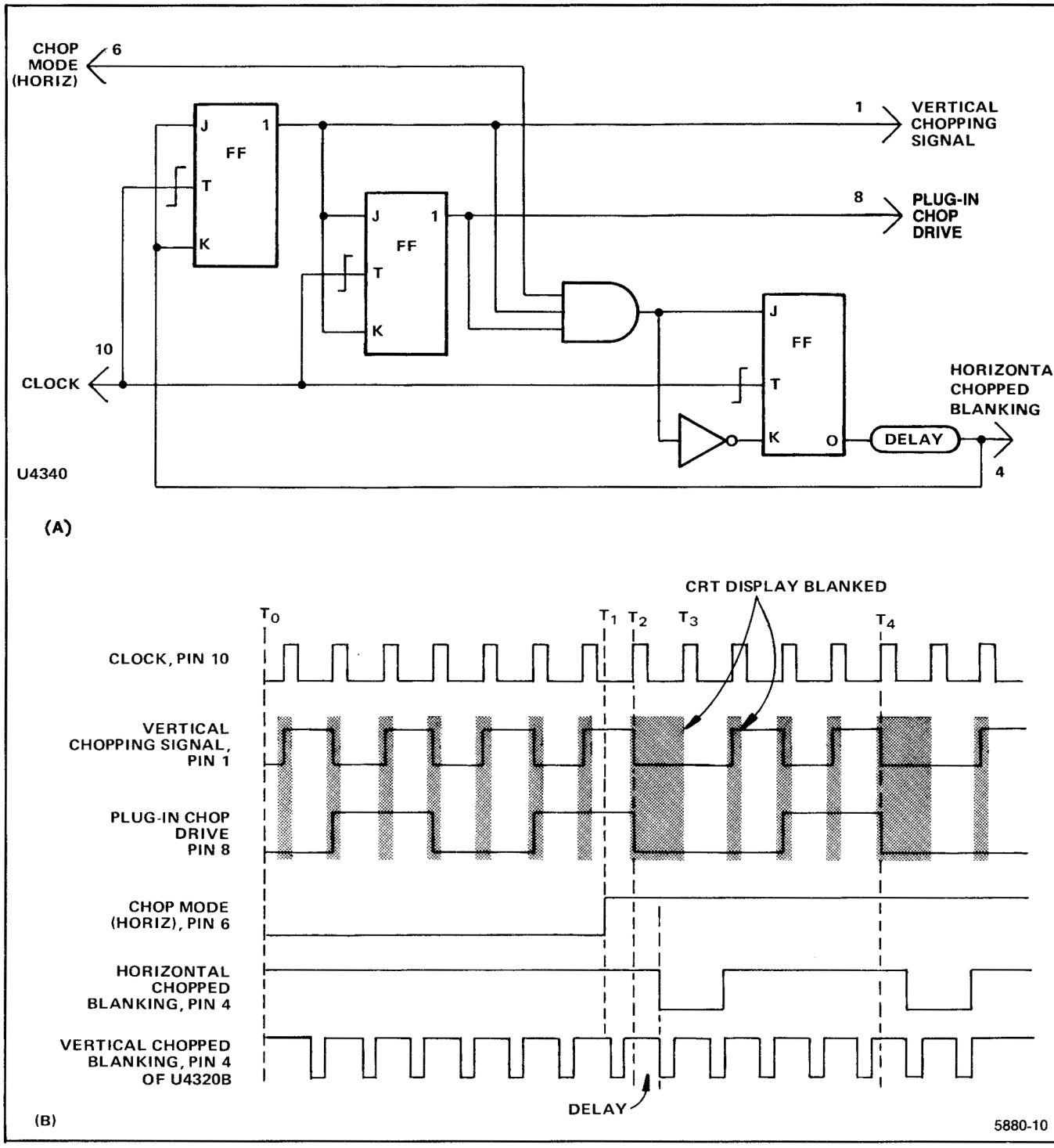

Figure 4-15. (A) Logic diagram of Chop Counter stage; (B) Idealized waveforms for Chop Counter stage.

http://manoman.sqhill.com

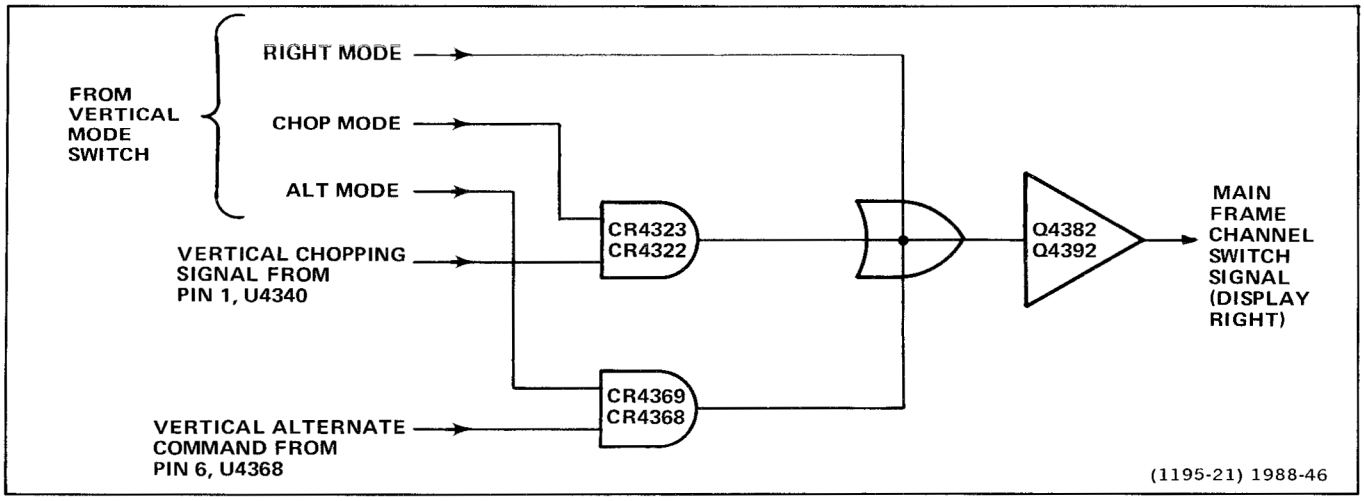

Figure 4-16. Logic diagram of Vertical Mode Logic stage.

In the ALT position of the VERTICAL MODE switch, a HI level is applied to the anodes of CR4368-CR4369 through R4369. These diodes are forward biased so the Vertical Alternate Command from pin 6 of the Vertical Binary stage can pass to the base of Q4382 to determine the Display Right Level. The Vertical Alternate Command switches between its HI and LO levels at a rate determined by the Vertical Binary stage.

The control levels in the LEFT and ADD positions of the VERTICAL MODE switch are not connected to this stage. However, since only the line corresponding to the selected vertical mode can be HI, the RIGHT, CHOP, and ALT lines must remain at their LO level when either LEFT or ADD are selected. Therefore, the base of Q4382 remains LO to produce a LO Display Right output level at the collector of Q4392.

Trace Separation

The Trace Separation stage is made up of discrete components Q4438, Q4442, Q4448, and Q4456. This stage produces the Trace Separation output to the Vertical Amplifier circuit to offset the B-sweep display when operated in a dual-sweep mode (horizontal). The level of this output current is determined by the setting of the VERT TRACE SEPARATION (B) control (on diagram 2). The current from the VERT TRACE SEPARATION control is switched so that the Trace Separation output is provided only when the B sweep is being displayed in the ALT or CHOP horizontal modes and not when the B sweep only is being displayed, nor for independent-pairs operation (sweep slaving). Operation of this stage is as follows:

The VERT TRACE SEPARATION (B) control (on diagram 2) provides current to the Trace Separation output through R4456 and Q4456 when Q4456 is forward biased. When the B sweep is being displayed (for ALT or CHOP horizontal operation), the Display B signal at the base of Q4442 is HI. This forward biases Q4442. Its collector goes negative to forward bias Q4448, causing Q4448 to saturate and its collector goes positive to forward bias Q4456. During the time the A sweep is being displayed, the Display B signal is LO. This reverse biases Q4442 and Q4448; Q4456 is reverse biased and the VERT TRACE SEPARATION (B) control is disconnected while the A sweep is being displayed.

When the HORIZONTAL MODE switch is set to B, a HI level is connected to the emitter of Q4442 through R4431. This reverse biases Q4442 even though Display B at its base is HI for this mode. Therefore, the VERT TRACE SEPARATION (B) control has no effect. When the VERTICAL MODE switch is set to ALT and the Delay Mode Control Out level from the A time-base unit is LO (indicating non-delayed sweep operation), a HI level is applied to the emitter of Q4442 even though the Display B level is HI. This action disconnects the VERT TRACE SEPARATION (B) control for slaved-alternate operation so that the vertical position of the B sweep display is determined by the slaved LEFT VERT plug-in unit only. If delayed-sweep operation is selected, the Delay Mode Control level is HI to forward bias Q4438 and Q4448. This allows the VERT TRACE SEPARATION (B) control to position the B sweep display, since slaved-alternate operation is not possible when operating in a delayed-sweep mode.

A logic diagram of the Trace Separation stage is shown in Figure 4-17A. The discrete components which make up each logic function are identified. An input/output table for this stage is given in figure 4-17B.

http://manoman.sqhill.com

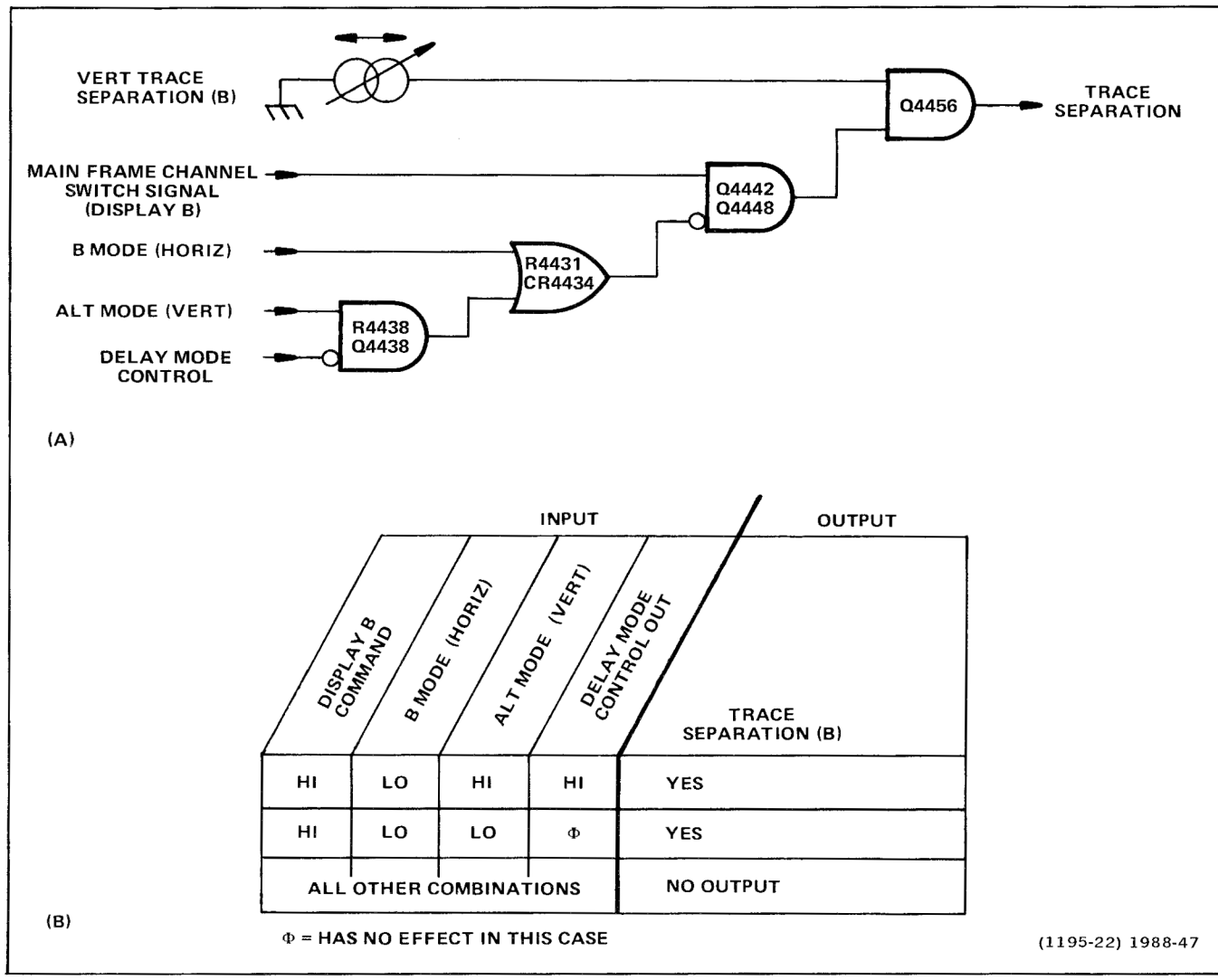

Figure 4-17. (A) Logic diagram of Trace Separation stage; (B) Table of input/output combinations.

TRIGGER SELECTOR
Diagram 5

The Trigger Selector circuit determines the source of the internal triggering signals connected to the A and B Horizontal compartments. Figure 4-18 shows a detailed block diagram of the Trigger Selector circuit. A schematic of the Trigger Selector is given on diagram 5 at the rear of this manual.

Operation of the A and B Trigger is similar. Circuit numbers in this discussion are for the B Trigger circuit.

Trigger Signals

Amplifier units installed in the vertical compartments provide a differential trigger signal to the mainframe. These signals are terminated into 50-ohm power dividers. The 50-ohm strip transmission lines carry half of the input signal from the power dividers to the A and B Trigger Selector circuits. The inputs of the channel switches, U3 and U4 have a 50-ohm input impedance, and terminate the transmission lines.

B Trigger Channel Switch

Channel Switch U4 has two differential inputs and one differential output. Control voltages at pins 1, 2, 11, and 12

http://manoman.sqhill.com

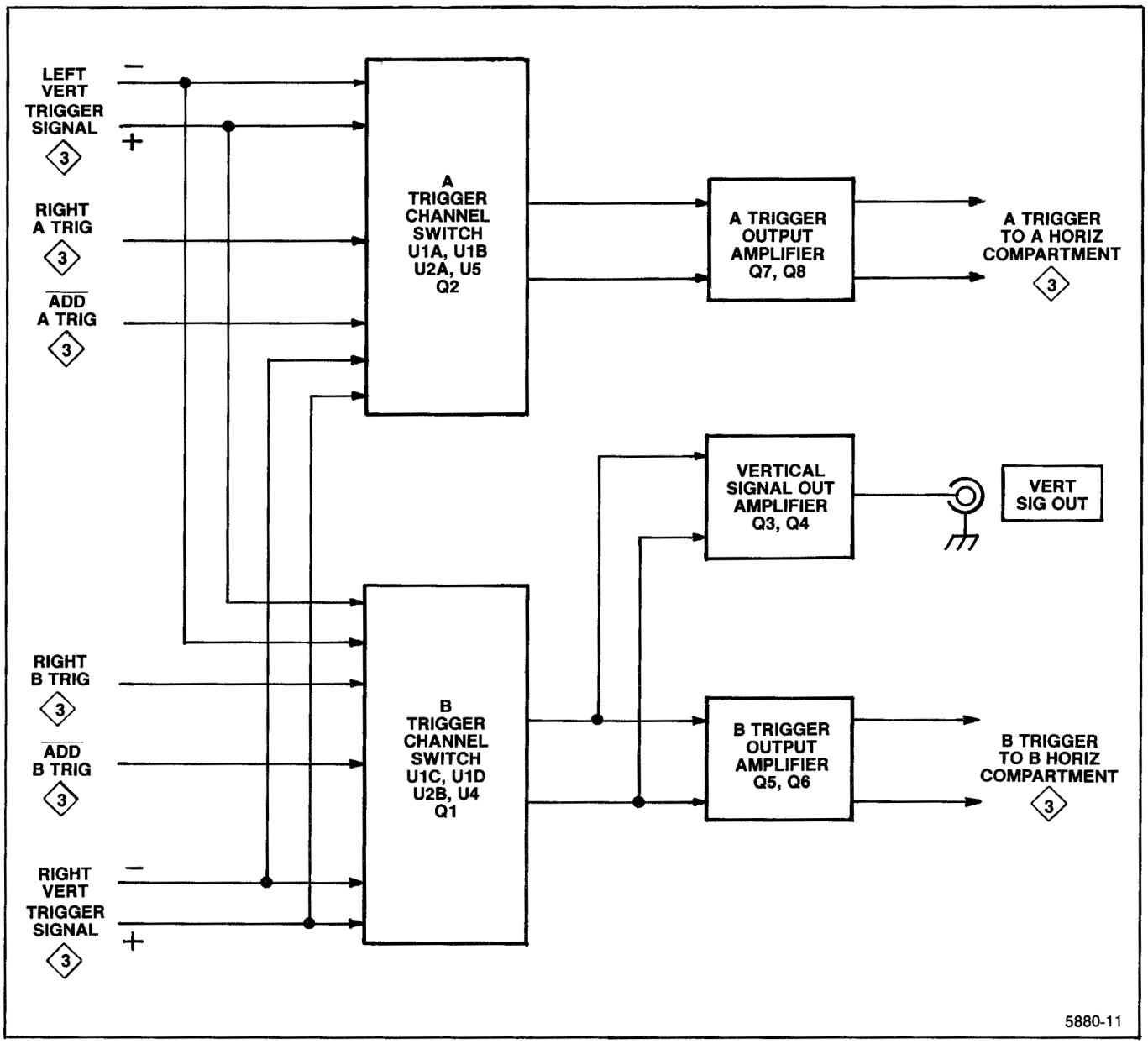

Figure 4-18. Detailed block diagram of the Trigger Selector circuit.

determine whether the trigger input signals are coupled through to the output or are terminated within the channel switch. U2B and Q1 set the output dc common-mode voltage as sensed by L1-R22 and L2-R25 and is compared with a reference voltage set by divider R23 and R24. If a higher than normal common-mode dc voltage is sensed, the output of U2B goes negative to lower the base voltage of Q1. This reduces the current into pin 13A, causing the dc common mode voltage at pin 3 and 13 to decrease. The actual voltages required at pin 13A to establish the correct output dc common-mode voltage varies with the setting of the VERTICAL MODE switch.

Each channel within U4 has an independent pair of control pins for channel selection. If the "ON" pin is more positive than the "OFF" pin, that channel is selected. All of the "ON" pins are held at about +2.0 volts. The "OFF" pins are either HI (+2.5 volts) or LO. The B Trigger Channel Switch has four operating modes: Left, Right, Alt, and Add. In the Left and Right modes, the Add logic level is HI (on pin CF); the Right Logic Level (on pin CD) is LO for Left and is HI for Right. In the ALT mode, Add is HI, and Right alternates between LO and HI. In the ADD Mode, both Add and Right are LO.

http://manoman.sqhill.com

B Trigger Output Amplifier

The B Trigger Output Amplifier provides the internal trigger signal to the B HORIZ compartment. Transistors Q5 and Q6 are connected as a paraphase amplifier. The B Trigger Center adjustment R44 balances the emitter current of Q5 and Q6 for equal dc output levels. B Trigger Gain adjustment R41 sets the emitter degeneration of Q5 and Q6 to adjust the gain of the B Trigger Output Amplifier. Components C4 and R99 are selected for optimum amplifier bandwidth. The output impedance of this stage is 100 ohms differentially, determined primarily by R48 and R50.

Vertical Signal Out Amplifier

The Vertical Signal Out Amplifier provides the signal to the VERT SIG OUT connector on the rear panel. Transistors Q3 and Q4 are connected as a push-pull to single-phase convertor. DC Center adjustment R28 sets the emitter current of Q3 and Q4 which determines the quiescent dc output voltage at J549. The source of the output signal is determined by the B TRIGGER SOURCE switch and the VERTICAL MODE switch.

VERTICAL INTERFACE
Diagram 7

The Vertical Interface circuit selects the vertical deflection signal for display on the crt from the output of the LEFT and/or RIGHT VERT plug-in compartment(s). Figure 4-19 shows a detailed block diagram of the Vertical Interface circuit. A schematic of the Vertical Interface circuit is given on diagram 7 at the rear of this manual.

Vertical Channel Selector

The Vertical Channel Selector interfaces Channel Switch U668 to logic signals from the Main Interface. The Channel Switch stage requires two pairs of complementing control voltages; one pair for each channel. To select a channel, a HI level must be applied to the "ON" input of U668 (pin 2 for LEFT and pin 12 for RIGHT VERTICAL MODE switch positions) and a LO level must appear at the "OFF" input (pin 1 for LEFT and pin 11 for RIGHT VERTICAL MODE switch positions). To inhibit a channel the control voltages are reversed.

When the VERTICAL MODE switch is set to LEFT, the Display Right command from the Main Interface is set LO, the Add line is LO and, normally, X-Y inhibit is LO. Transistors Q652, Q658, and Q558 are turned on; Q656 and Q556 are off. The result is pins 1 and 12 of U668 are pulled LO but pins 2 and 11 are HI. Consequently, the LEFT VERT channel is turned on while the RIGHT VERT channel is turned off. Signals applied at J602 and J603 are fed to the outputs at J592 and J694. Similarly, if Display Right is HI, the RIGHT VERT channel is turned on and LEFT VERT channel off. RIGHT VERT channel signals are fed to the outputs and LEFT VERT channel signals are terminated within U668.

When the VERTICAL MODE switch is set to either ALT or CHOP, the Display Right signal line switches between the LO and HI levels at a rate determined by either the Chop Counter or Vertical Binary stages (see Logic circuit description). This action displays the signal from the LEFT VERT unit when the Display Right signal line is LO and displays the signal from the RIGHT VERT unit when the signal line is HI.

When ADD vertical mode operation is selected the Add signal line is HI, and the Display Right signal is LO. This allows both the RIGHT VERT and LEFT VERT signals to pass to U668. The signals from both vertical units are algebraically added in U668 and the resultant signal determines the vertical deflection.

The X-Y inhibit command has absolute control over the output of the Channel Switch stage. Quiescently, this signal is LO; however, when the Readout System is ready to display information on the crt, this level goes HI, blocking the signals from both vertical units.

When X-Y Inhibit is HI, Q652 is turned off. Current in R653 now flows through CR552 and CR654 lowering the base voltage of Q556 by one diode drop, and that of Q658 by two diode drops. This insures that Q558 and Q656 are turned on regardless of the state of Display Right or Add.

Right And Left Channel Feedbeside

Operation of the Left and Right Channel Feedbeside stages are identical. Circuit numbers used in this discussion are for the Right Channel Feedbeside.

Function of the Feedbeside stage is to compensate for low-frequency imperfections in the frequency response of the Channel Switch stage, U668. Self heating of the transistor base-emitter junction of some transistors within U668 causes the low-frequency gain to appear larger than the midband gain. To correct this, a portion of the input signal is picked off through R502 and R504 and applied to U508. This differential signal is converted to a single-ended signal and distributed into four RC (resistive-capacitative) networks, each having a different time constant. Variable components R512, R515, R520, R525, R530, and C538 are adjusted to provide an accumulated waveform. This waveform is converted to a paraphase signal by U538, Q542, and Q548, and is then injected into U668 through pins 4 and 6, where it is subtracted from the signal entering U668 at pins 7 and 9. Proper adjustment results in flat-frequency response and optimum-transient response at output pins 3 and 13. Right Center adjustment R535 sets the level at pin 2

http://manoman.sqhill.com

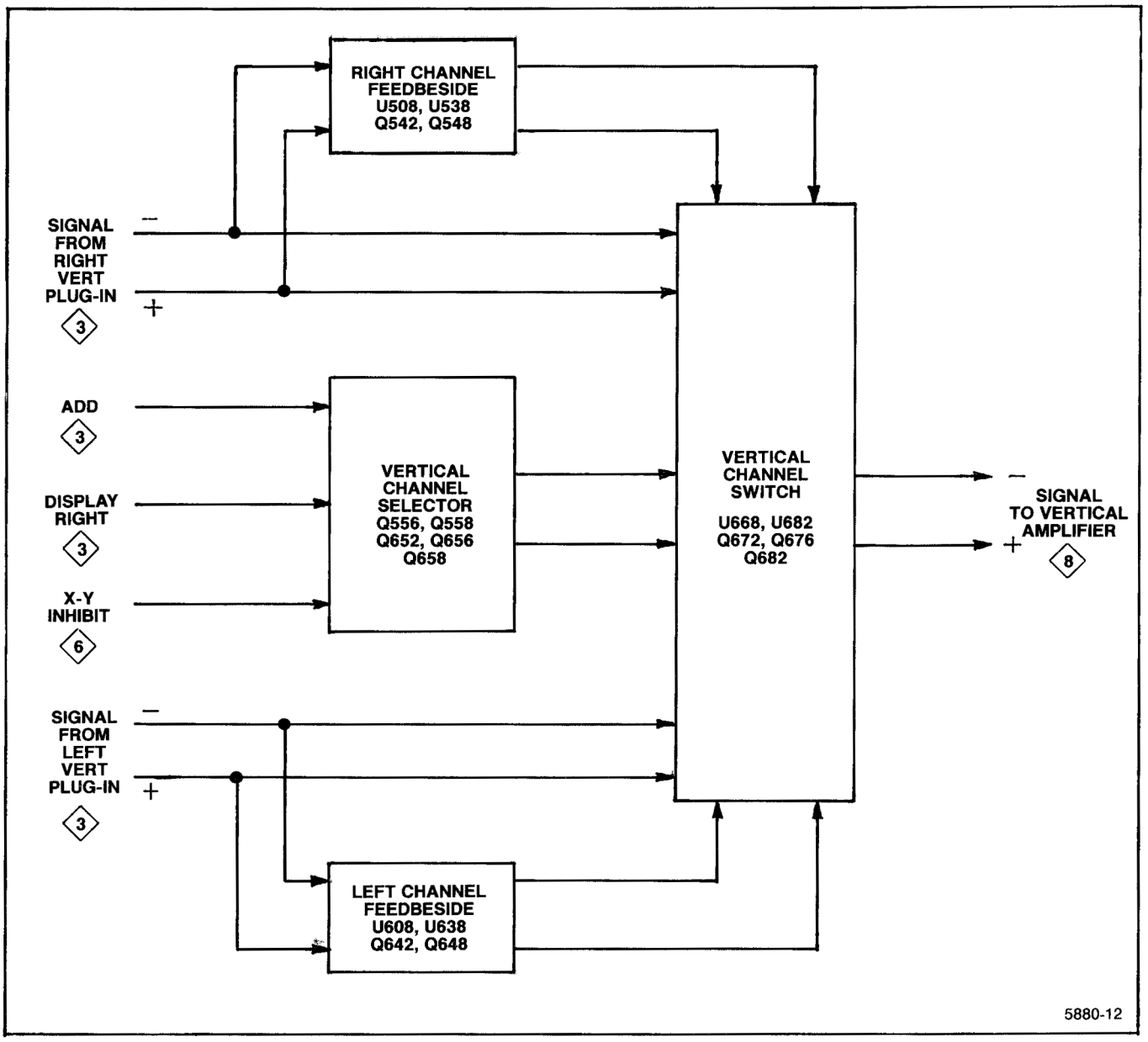

Figure 4-19. Detailed block diagram of Vertical Interface circuit.

of U538 to determine the dc centering at the output of U668.

Vertical Channel Switch

The vertical deflection signal from the left and right vertical plug-in units is either terminated within this stage or coupled through as determined by the Vertical Channel Selector stage. The Vertical Channel Switch stage is made up primarily of integrated circuit U668. Inputs 7 and 9 provide a differential input for the signal from the right vertical plug-in unit. Input pins 17 and 19 provide a differential input for the signal from the left vertical plug-in unit. The differential output signal at pins 3 and 13 is connected to J694 and J592 respectively.

Components U672, Q672, Q676, and Q682 supply standing current to pin 3A of U668 to maintain the output common-mode dc level at pins 3 and 13. The output common-mode level at pins 3 and 13 of U668 is sensed by R559-R659, and compared with a reference level determined by divider R680-R681. Assume for example that pin 2 of U682 is lower than pin 3, indicating a low common-mode

http://manoman.sqhill.com

output level at pins 3 and 13. The output of U682 at pin 6 is driven positive and current flows in R683. This current must be supplied from the +15 V supply via R682, thereby lowering the base voltage of Q682 and increasing its collector current. Common-base amplifier Q676 passes along the increased collector current to pin 3A of U668. This increases the output common-mode level, thus bringing U682 into balance. The actual voltage required at pin 3A of U668 to establish the correct output dc common-mode voltage depends on the Vertical Channel Switch mode.

VERTICAL AMPLIFIER Diagram 8

The Vertical Amplifier circuit provides final amplification for the vertical signal received from delay-line DL5 before it is applied to the crt vertical deflector. In addition, low-frequency signals to provide the VERT TRACE SEPARATION (B) function, crt scale factor readout, and the vertical portion of the BEAMFINDER function are also handled in the Vertical Amplifier. Figure 4-20 shows a detailed block diagram of the Vertical Amplifier circuit. A schematic of the Vertical Amplifier is given on diagram 8 at the rear of this manual.

Delay-Line

Delay-line DL5 delays the vertical signal approximately 65 nanoseconds to allow the horizontal circuits time to initiate a sweep before the vertical signal reaches the crt vertical deflection plates. This allows the instrument to display the leading edge of the signal originating the trigger pulse when using internal triggering. The delay-line impedance is 100 ohms differentially, and because it is coaxial, does not produce preshoot or phase distortion in the crt display.

Delay-Line Compensation

The Delay-Line Compensation stage provides frequency compensation to offset delay line losses due to "skin-effect" in the cable. This compensation is achieved by attenuating the signal at low frequencies approximately 4.8 dB. At high frequencies (about 1.0 gigahertz) the signal passes with little attenuation. Transient response front-corner adjustment is achieved by C215, L100, and R215. The components connecting the input signal to U415 provide forward termination of the delay-line.

Feedbeside

The Feedbeside stage compensates for low-frequency imperfections in the frequency response of the Output Amplifier stage, U415 and U515. Self heating of the transistor base-emitter junction of some transistors within U415 and U515 causes the low-frequency gain to appear larger than the midband gain. To correct this, a portion of the input signal is picked off via the Delay-Line Compensation stage and applied to U335. The paraphase signal is converted to a single-ended signal by U335 and distributed into six RC (re-

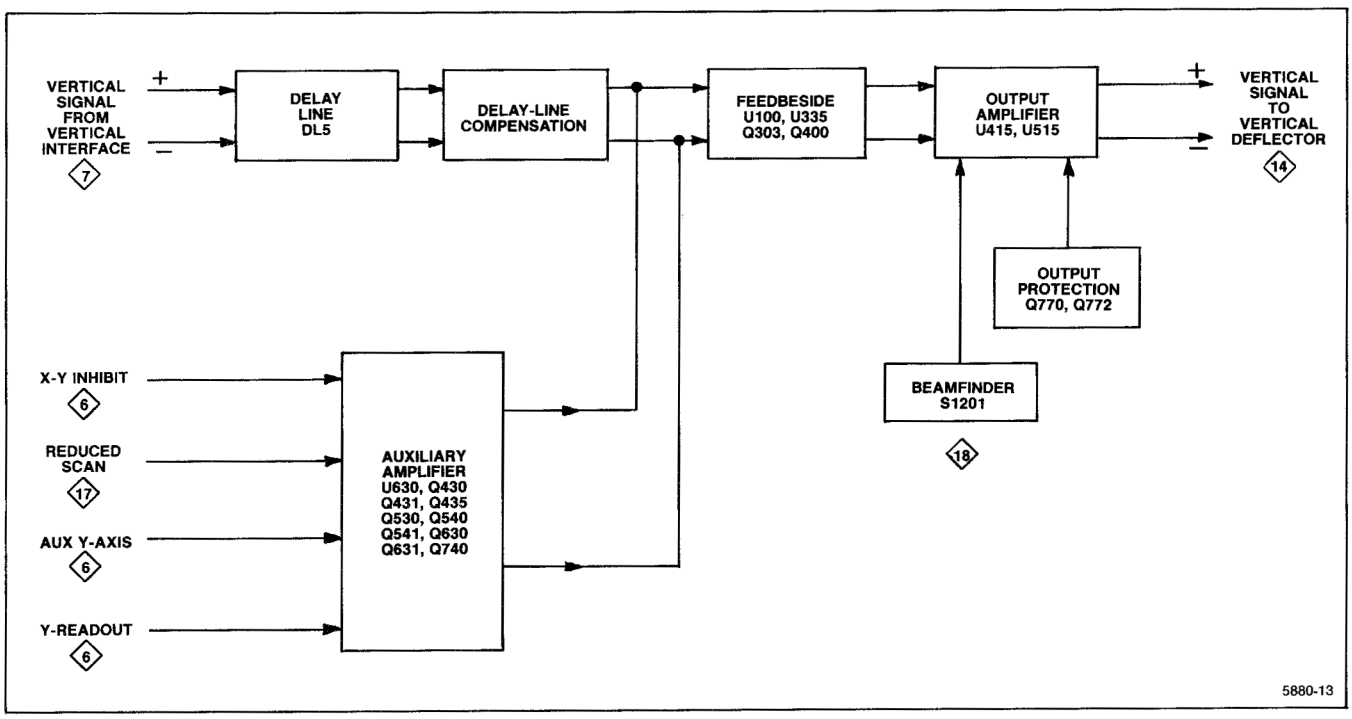

Figure 4-20. Detailed block diagram of the Vertical Amplifier circuit.

http://manoman.sqhill.com

sistive capacitive) networks, each having a different time constant. Resistors R130, R131, R132, R237, R238, R335, and C200 are adjusted to provide an accumulated waveform. This waveform is converted to a paraphase signal by U100, Q303, and Q400, and is then injected into U415 through Pins 1 and 5 where it is subtracted from the signal entering U415 at pins 7 and 9. Proper adjustment of the RC components results in a flat-frequency response and optimum-transient response at the output of U415 (pins 17 and 19).

Diodes CR333 and CR334 improve the vertical amplifier overdrive recovery by limiting the amplitude of the feedbeside correction signals that exceed the dynamic range of the Output Amplifier. Thermistor RT303 varies the gain of the feedbeside amplifier to provide increased correction at high ambient temperature where transistor self-heating is aggravated.

Output Amplifier

The Output Amplifier consists of two thin-film Hybrid wideband amplifiers, U415 and U515, and their associated bias circuitry. These amplifiers provide a voltage gain of 4 and 10 respectively resulting in an overall voltage gain from J9 and J10 to the crt vertical deflector of about 40. All signal path interconnections between and within hybrids are made with 50-ohm strip transmission lines via the HYPCON system.

Integrated circuit U415 receives the delayed and compensated signal from the delay-line compensation stage at input pins 7 and 9. Variable resistor R211 provides vertical amplifier gain adjustment by shunting the differential signal. Trimmers C401, R404, and R405 are transient response adjustments, effective in the first 10 nanoseconds of the step response. Bias current for U415 is supplied by U700B. U700A and associated circuitry operate as a power supply to maintain a constant common-mode dc level at the input to U515 regardless of current demand from U415.

When the BEAMFINDER switch (on diagram 15) is depressed, the current source for U515 is changed to provide the BEAMFINDER function. Normally, the current source for U515 is directly from ground through the BEAMFINDER switch. However, when the BEAMFINDER switch is actuated, the only current source for U515 is through R712. This limits the dynamic range of the stage by limiting its available current, so the display is compressed vertically within the crt graticule area.

The signal at the output of U515 (pins 17 and 19) is connected, via a flexible coplaner transmission line, to the crt vertical deflection plate neck pins. A distributed deflection plate system is used in the crt for maximum bandwidth. The signal travels along the deflectors at a velocity essentially the same as the velocity of the electron beam passing through the vertical deflector. This synchronism of the deflection signal and the electron beam reduces the loss in high-frequency sensitivity due to electron-transit time through the deflection plate structure. After propagating along the deflection plates, the signal exits the crt into a termination network consisting of R83. R83 is adjustable to match the crt impedance deflection structure to the crt termination.

Output Protection

Transistors Q720 and Q722 comprise a protection circuit for U515 in case the +15 volt supply is shorted to ground. If this occurs, Q722 turns on causing the base of Q720 to drop negative, limiting the emitter voltage of Q720 at a safe level for U515.

Auxiliary Amplifier

The Auxiliary Amplifier is used to inject low-frequency (less than 2 MHz) signals, associated with crt scale-factor readout and alternate sweep switching, into the vertical deflection system. Normally, the X-Y Inhibit signal at J26 is LO, Q541 and Q630 are off, and Q631 is on. The Vertical Trace Separation signal at J43 is coupled through Q631 to the input of paraphase amplifier Q530 and Q435. Transistors Q430 and Q431 form a shunt-feedback amplifier with sufficient gain to drive the inputs of U415 (pins 7 and 9).

When the Readout System initiates a character display, it sets the X-Y Inhibit logic level HI. Emitter follower Q540 turns Q541 on. The voltage on the collector of Q541 drops to zero which turns Q631 off and turns Q630 on. The Vertical Trace Separation signal is then blocked by Q631. Y Readout signals are inverted by U630 and coupled through Q630 to paraphrase amplifier Q530 and Q435. Readout centering is added to the composite readout signal from R737. At the end of the character display period, X-Y inhibit returns LO.

In the reduced scan mode the X-Y Reduced Scan input to the gate of Q740 goes HI. Q740 turns off taking R633 out of the circuit. R634, without the parallel resistance of R633, reduces the Y readout drive to pin 2 of U630 resulting in smaller readout characters on the crt in the reduced scan mode.

HORIZONTAL INTERFACE
Diagram 9

The Horizontal Channel Switch circuit determines whether the signal from the output of the A horizontal or B horizontal plug-in unit provides the horizontal deflection sig-

http://manoman.sqhill.com

nal. This circuit also accepts an input from the Readout System (diagram 6) which blocks the horizontal signal while the readout display is presented on the crt. Figure 4-21 shows a detailed block diagram of the Horizontal Interface circuit. A schematic of the Horizontal Interface circuit is given on diagram 9 at the rear of this manual.

Horizontal Channel Switch

The Horizontal Channel Switch operates as a switched amplifier and consists primarily of U884. The differential horizontal signal from the A HORIZ plug-in compartment is applied to pins 2 and 15. The differential horizontal signal from the B HORIZ plug-in compartment is applied to pins 7 and 10. The Display B control signal determines whether the A or B horizontal signal is coupled to output pins 12 and 13.

When the HORIZONTAL MODE switch is set to A the Display B signal, applied to pin 4 of U884 through S865, is LO. This level allows the signal from the A horizontal unit to pass to the output while the signal from the B horizontal unit is blocked. In the B position of the HORIZONTAL MODE switch, the level at pin 4 of U884 is HI. Now, the signal from the B horizontal unit is connected to the output while the signal from the A horizontal unit is blocked. When the HORIZONTAL MODE switch is set to ALT or CHOP, the Display B signal at pin 4 of U884 switches between the HI and LO levels at a rate determined by the Horizontal Binary stage in the Logic circuit. This action allows the signals from the A horizontal unit to be displayed when the Display B signal is LO and the signal from the B horizontal unit to be displayed when it is HI.

Horizontal Selector switch S865 selects the horizontal compartment that provides horizontal deflection. In the Norm position, horizontal deflection is determined by the HORIZONTAL MODE switch as described above. In the A position, the A horizontal compartment provides horizontal deflection regardless of the HORIZONTAL MODE switch setting. Likewise, the B horizontal compartment is selected in the B position.

The X-Y Inhibit signal from the Readout System, diagram 6, applied to pin 6 of U884 has absolute control over the Horizontal Channel Switch stage. Quiescently, this signal is LO to allow the signal from the selected horizontal unit to pass to the output. However, when the Readout System displays information on the crt, this signal goes HI to block the signals from both horizontal compartments.

B Horizontal X-Y Delay Compensation

The Horizontal Interface circuit includes the X-Y Compensation network (Option 2 only). This network provides a delay for the horizontal (X) signal from the B HORIZ plug-in compartment to match the delay of the vertical (Y) signal due to the delay line. For instruments which are not equipped with this feature, the B horizontal signal from the B HORIZ plug-in compartment is connected directly to the

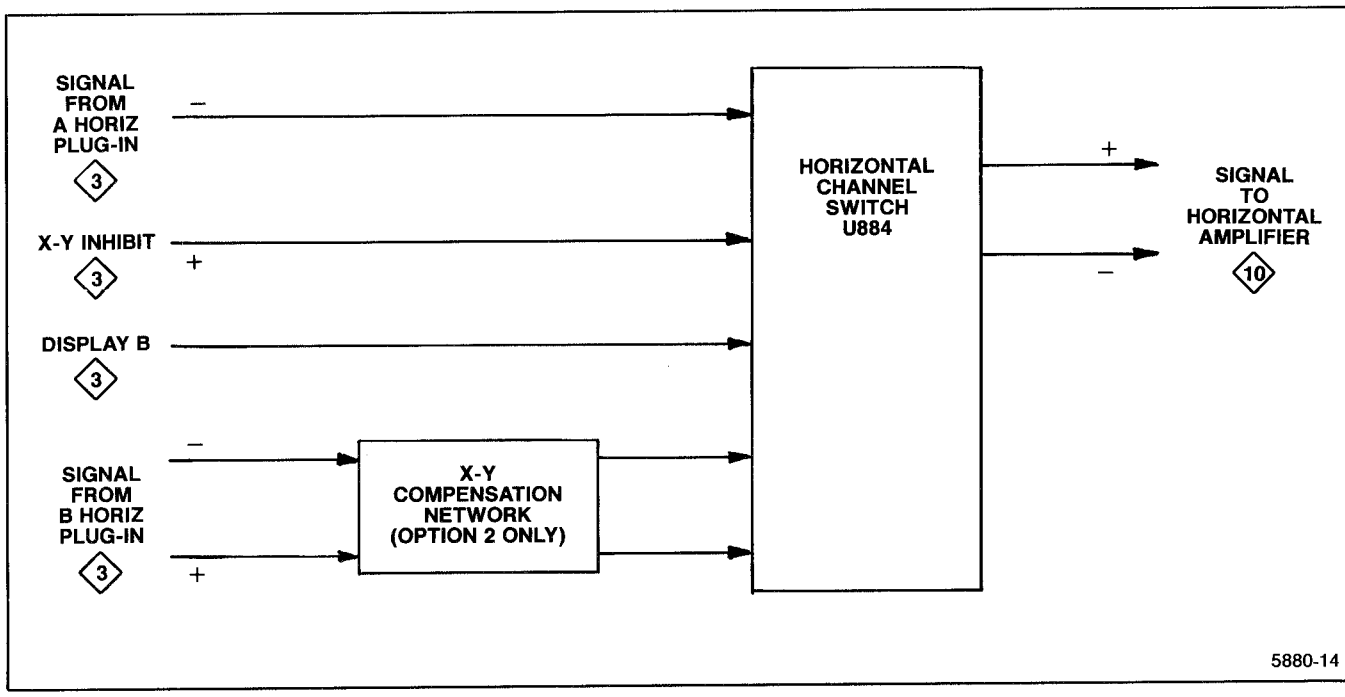

Figure 4-21. Detailed block diagram of the Horizontal Interface circuit.

http://manoman.sqhill.com

Horizontal channel Switch U884 through the Horizontal Interconnect board.

Time-Base Operation. When the plug-in unit installed in the B HORIZ compartment is operated as a standard time-base unit to produce a horizontal sweep for deflection of the crt beam, the B Delay Compensation network is effectively disabled. The X-Y Compensation command, applied to pin BY, is HI and relays K822-K838 are not actuated. Therefore, the relay contacts remain in the normally-closed position so the horizontal signal passes directly through this network to the Horizontal Channel Switch.

X-Y Operation. If the time-base unit installed in the B HORIZ compartment is operated as an amplifier, or if an amplifier unit is installed in the B HORIZ compartment, the X-Y Compensation command to the B Delay Compensation network drops to the LO level. This actuates relays K822-K838 to connect the B Delay Compensation network into the circuit.

HORIZONTAL AMPLIFIER
Diagram 10

The Horizontal Amplifier circuit amplifies the push-pull horizontal deflection signal from the plug-in unit installed in either horizontal compartment and connects it to the horizontal deflection plates of the crt. Figure 4-22 shows a detailed block diagram of the Horizontal Amplifier circuit. A schematic of the Horizontal Amplifier is given on diagram 10 at the rear of this manual.

Input Amplifier

The Input Amplifier stage consists of an FT doubler, Beamfinder, and readout positioning circuitry. Two differential pairs of transistors, Q3 - Q4 and Q5 - Q6, plus two common-base amplifiers, Q9 - Q10, comprise the FT doubler. The signal from the Horizontal Interface circuit is connected to the bases of Q3 and Q6. The gain of this input stage is controlled by the emitter resistors of the differential pairs. Overall gain is set by Horizontal Gain adjustment R22. High frequency adjustments are also provided in the dif-

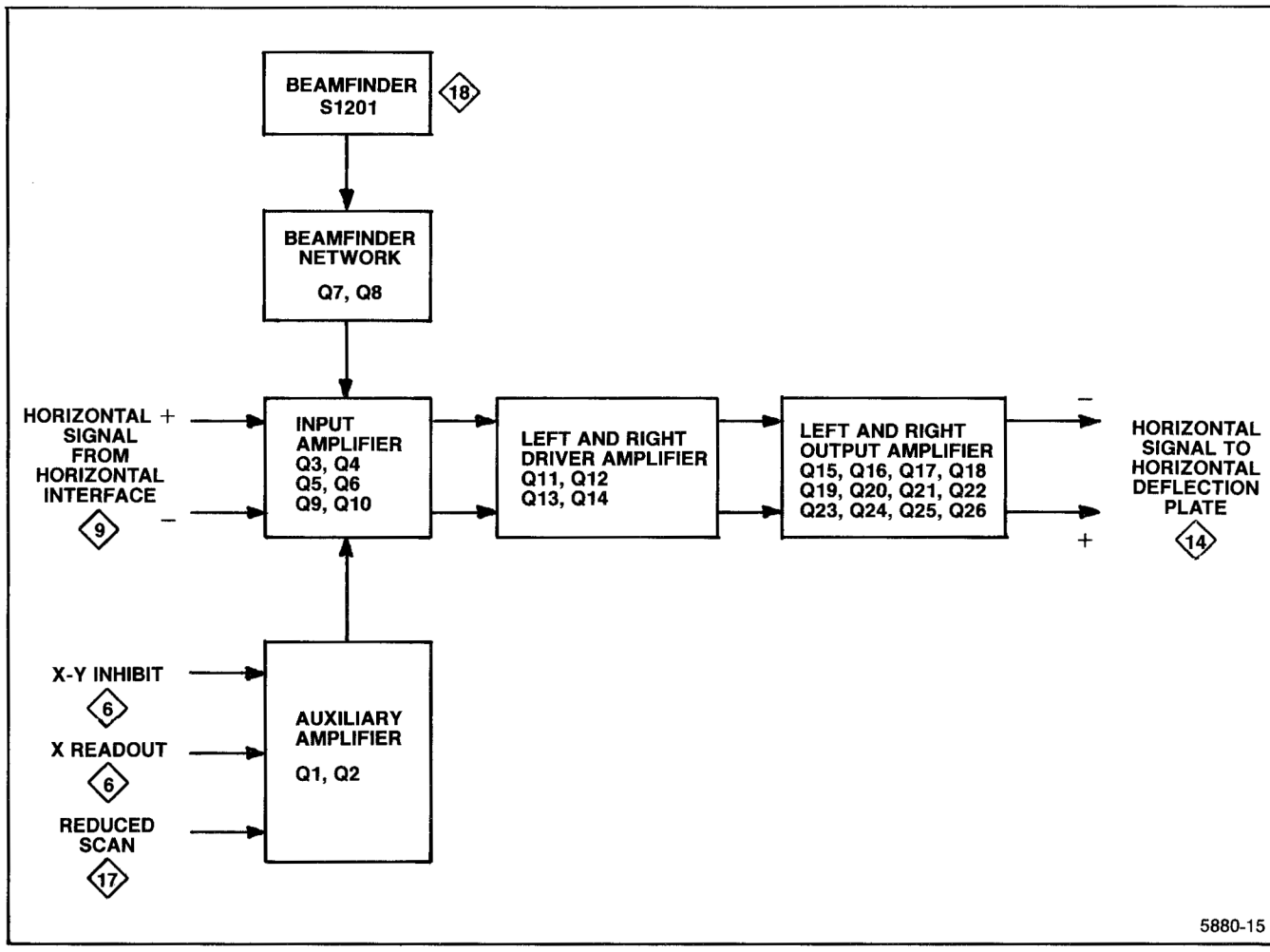

Figure 4-22. Detailed block diagram of the Horizontal Amplifier circuit.

http://manoman.sqhill.com

ferential pair emitters by R15-C1 and R25-C5. Horizontal Center adjustment R8 balances the base currents of Q3 and Q6 to horizontally center the display.

Beamfinder Network

Emitter current for the differential pairs is normally supplied through Q8 and the BEAMFINDER switch (see diagram 15). However, when the BEAMFINDER switch is pressed, Q8 turns off limiting the emitter current to Q3 - Q4 and Q5 - Q6. This reduces the dynamic range of the differential pairs to keep the horizontal display confined to the screen. When Q8 turns off, Q7 is turned on to maintain the bias current for Q11 and Q13 at nearly the normal level even though the output current from the differential pairs is reduced.

Auxiliary Amplifier

When readout is to be displayed, the X-Y Inhibit signal turns Q1 on. Readout Centering adjustment R13 balances the base current of Q3 and Q6 to position the readout display horizontally. The X readout signal is connected to the base of Q6 through Q2. The normal horizontal signal is blocked in the Horizontal Interface circuit.

In the reduced scan mode the X-Y Reduced Scan input to the gate of Q2 goes HI, turning it off. R34 reduces the X readout drive to Q6, resulting in smaller readout characters on the crt in the reduced scan mode.

Left and Right Driver Amplifier

The Left and Right driver Amplifiers each consist of an operational amplifier to drive their respective output amplifier stages. Transistors Q13 and Q14 comprise the operational amplifier for the Left Driver Amplifier. Transistors Q11 and Q12 comprise the operational amplifier for the Right Driver Amplifier. To prevent the Left Output Amplifier from being overdriven, signal limiting occurs in the Left Driver Amplifier when the collector of Q13 is driven far enough negative for CR1 and CR2 to become forward biased. As CR1 and CR2 conduct, the effective gain of the stage is greatly reduced, and in turn, the drive to the Left Driver Amplifier. Similarly, to prevent the Right Output Amplifier from being overdriven, signal limiting occurs in the Right Driver Amplifier when the collector of Q11 is driven far enough positive for CR4 and CR5 to become forward biased. As CR4 and CR5 conduct the gain of the stage is greatly reduced, and in turn, the drive to the Right Output Amplifier is reduced.

Left and Right Output Amplifier

The Left Output Amplifier consists of a mid-frequency operational amplifier paralleled by a high-frequency signal path. The network of R68, R69, C13, and C14 comprise the input impedance, while R73 and C41 comprise feedback impedance for the operational amplifier. High-frequency components of the horizontal signal are amplified by Q22 and coupled directly to the common-base output transistor Q24 through C25. High-frequency compensation is provided by C14, C24, and R86.

Basic operation of the Right Output Amplifier is the same as just described for the Left Output Amplifier.

OUTPUT SIGNALS
Diagram 11

The Output Signals circuit provides the +SAWTOOTH OUT and +GATE OUT signal to the rear panel. These output signals are samples of signals from the associated plug-in units. Figure 4-23 shows a detailed block diagram of the Output Signals circuit. A schematic of the Output Signals circuit is given on diagram 11 at the rear of this manual.

Sawtooth Out Amplifier

The sawtooth signals from the A and B time-base units are connected to the Sawtooth Amplifier stage through series resistors R192 and R193 respectively (see diagram 3). Sweep Selector jumper S3 determines whether the A-sweep or the B-sweep sawtooth signal provides the +SAWTOOTH OUT signal. The unused sawtooth signal is terminated by R3.

Transistors Q10-Q11-Q17 compose an inverting feedback amplifier. The gain of the stage is about two, as determined by the ratio of feedback resistor R16 to the input resistance (made up of R9 and either R192 or R193 depending on which sawtooth source is selected). RC network R17-C17 provides frequency-response stabilization for this stage.

Gate Out Amplifier

The +GATE OUT signal is selected from three input gate signals by Gate Selector jumper S46. In the A and B positions a positive gate signal from the selected horizontal compartment is connected to the base of Q62, and the base of Q49 is connected to ground. Before a gate occurs, Q62 is biased off and Q49 is conducting. The collector of Q49 is low enough to cut off Q77. When a gate occurs, it is coupled to the emitter of Q49, cutting it off. The current through R49 now flows through Q77 to produce the +GATE OUT.

In the DLY'D position, the base of Q62 is connected to ground and the base of Q49 is ungrounded. This allows the negative-going Delayed Gate signal from a delaying time-

http://manoman.sqhill.com

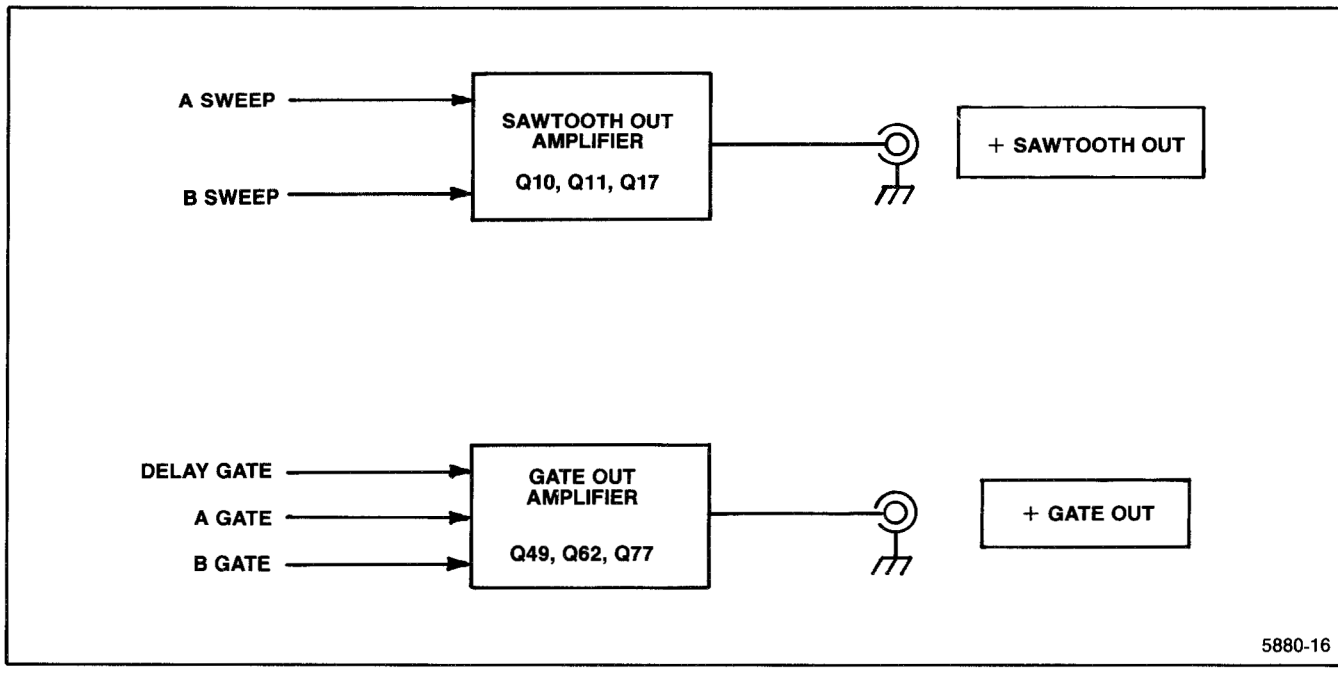

Figure 4-23. Detailed block diagram of the Output Signals circuit.

base unit to reach the base of Q49. When a gate occurs, Q49 is cut off, producing a positive-going signal at the +GATE OUT connector, as in the case of the A and B Sweep Gates.

Probe Power

Connectors J30 and J33 provide power for compatible active probes.

READOUT SYSTEM
Diagram 6

The Readout System provides an alpha-numeric display of information encoded by the plug-in units. This display is presented on the crt, and is written by the crt beam on a time-shared basis with the analog waveform display. A schematic of the Readout System is given on diagram 6 at the rear of this manual.

The following terms are used to describe the Readout System:

Character — A single number, letter, or symbol displayed on the crt, either alone or in combination with other characters.

Word — A group of related characters. In the Readout System, a word can consist of up to 10 characters.

Frame — A display of all words for a given operating mode and plug-in combination. Up to eight words can be displayed in one frame. Figure 4-24 shows the position of each word in a complete frame.

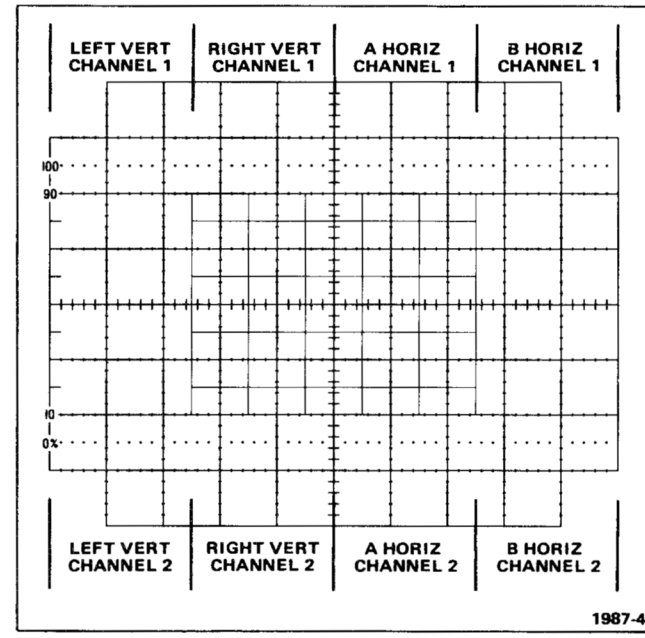

Figure 4-24. Location of readout display on the crt identifying the originating plug-in and channel.

Column — One of the vertical lines in the Character Selection Matrix (see Figure 4-25). Columns C-0 (column zero) through C-10 (column 10) can be addressed by the system.

http://manoman.sqhill.com

Hexidecimal from U3546 →			F	E	D	C	B	A	9	8	7	6	F
Hexi-decimal from U3486 ↓	Row Number ↓	Column Number →	C-0	C-1	C-2	C-3	C-4	C-5	C-6	C-7	C-8	C-9	C-10
		Current (mA)	0	0.1	0.2	0.3	0.4	0.5	0.6	0.7	0.8	0.9	⩾1.0
E	R-1	0		*0*	*1*	*2*	*3*	*4*	*5*	*6*	*7*	*8*	*9*
D	R-2	0.1		↓	<	*I*	/	+	−	+	*C*	⊥	>
C	R-3	0.2		Add one zero*	Add two zeros*	Reduce one prefix*	Reduce prefix and add one zero*						*IDENTIFY**
B	R-4	0.3		*m*	*μ*	*n*	*p*	*X*	*K*	*M*	*G*	*T*	*R*
A	R-5	0.4	SKIP*	*S*	*V*	*A*	*W*	*H*	*d*	*B*	*c*	*Ω*	*E*
9	R-6	0.5		*U*	*N*	*L*	*Z*	*Y*	*P*	*F*	*J*	*Q*	*D*
8	R-7	0.6				Decimal point no. 3*	Decimal point location no. 4*	Decimal point location no. 5*	Decimal point location no. 6*	Decimal point location no. 7*			
7	R-8	0.7										•	
6	R-9	0.8											
F	R-10	0.9	Add space in display*										
F	R-14	1.3	← JUMP* →										

Operational address.

Unused locations. Available for future expansion of Readout System.

5880-17

Figure 4.25. Character selection matrix for 7934 Readout System.

http://manoman.sqhill.com

Row — One of the horizontal lines in the Character Selection matrix. Rows R-1 (row 1) through R-10 (row 10) and R-14 (row 14) can be addressed by the system.

Time-Slot — A location in a pulse train. In the Readout System, the pulse train consists of 10 negative-going pulses. Each time-slot pulse is assigned a number between 1 and 10. For example, the first time-slot is TS-1.

Time-Multiplexing — Transmission of data from two or more sources over a common path by using different time intervals for different signals.

Hexidecimal — The hexidecimal numbering system uses the numerals 0 through 9 and the letters A through F to represent the 16 possible combinations of four binary digits.

Octal — The octal numbering system uses the numerals 0 through 7 to represent the eight possible combinations of three binary digits.

Binary-Coded Decimal (BCD) — The Binary-Coded Decimal system uses 10 unique combinations of four binary digits to represent the decimal numbers 0 through 9.

Display Format

Up to eight words of readout information can be displayed on the crt. The position of each word is fixed and is directly related to the plug-in unit from which it originated. Figure 4-24 shows the area of the graticule where the readout from each plug-in unit is displayed. Notice that Channel 1 of each plug-in unit is displayed within the top division of the crt, and Channel 2 is displayed directly below within the bottom division. Figure 4-26 shows a typical display where only Channel 2 of the Right Vertical and B Horizontal units is selected for display.

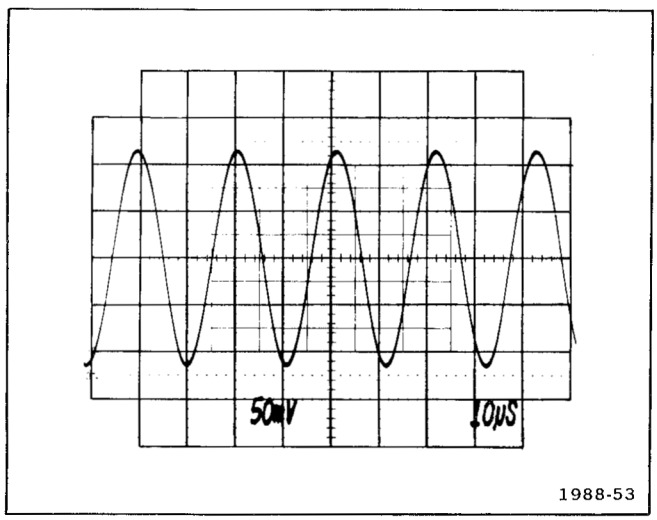

Figure 4-26. Typical readout display where only Channel 2 of the Right Vertical and B Horizontal units is displayed.

Each word in the readout display can contain up to 10 characters, although the typical display will contain between two and seven characters per word. The characters are selected from the Character Selection Matrix shown in Figure 4-25. In addition, 13 operational addresses are provided for special instructions to the Readout System. The unused locations in the Matrix (shaded area) are available for future expansion of the Readout System. The method of addressing the locations in the Character Selection Matrix is described in the following discussion.

Developing the Display

This description is intended to relate the basic function of each stage to the operation of the overall Readout System. Detailed information on circuit operation is given later. Figure 4-27 shows a detailed block diagram of the Readout System.

The key block in the Readout System is the Timer stage. This stage produces the basic signals that establish the timing sequences within the Readout System. The period of the timing signal is about 250 microseconds (drops to about 210 microseconds when Display-Skip is received; see detailed description of Timer stage for further information). This stage also produces control signals for other stages within this circuit and interrupt signals to the Vertical Amplifier, Horizontal Amplifier, and Logic circuits, which allow a readout display to be presented. The Time-Slot Counter stage receives a trapezoidal voltage signal from the Timer stage and directs it to one of ten output lines. These output lines are labeled TS-1 through TS-10 (time-slots 1 through 10) and are connected to the vertical and horizontal plug-in compartments as well as to various stages within the Readout System. The output lines are energized sequentially, so there is a pulse on only one of the ten lines during any 250-microsecond timing period. After the Time-Slot Counter stage has counted time-slot 10, it produces an End-of-Word pulse which advances the system to the next channel.

Two output lines (row and column) are connected from each channel of the plug-in unit back to the Readout System. Data is typically encoded on these output lines by connecting resistors between them and the time-slot input lines. The resultant output is a sequence of 10 analog current levels that range from 0 to 1 milliamp (100 microamps/step) on the row and column output lines. This row and column corresponds to the row and column of the Character Selection Matrix in Figure 4-25. The standard format for encoding information onto the output lines is given in Table 4-2. (Special-purpose plug-in units may have their own format for readout; these special formats will be defined in the manuals for these units.)

http://manoman.sqhill.com

Table 4-2
STANDARD READOUT FORMAT

Time-Slot Number	Description
TS-1	Determines decimal magnitude (number of zeros displayed or prefix change information) or the IDENTIFY function (no display during this time-slot).
TS-2	Indicates normal or inverted input (no display during this time-slot).
TS-3	Indicates calibrated or uncalibrated condition of plug-in variable control (no display for calibrated condition).
TS-4	Scaling.
TS-5 TS-6 TS-7	Not encoded by plug-in unit. Left blank to allow addition of zeros by Readout System.
TS-8	Defines the prefix which modifies the units of measurement.
TS-9 TS-10	Defines the units of measurement of the plug-in unit. May be standard unit of measurement (V, A, S, etc.) or special units selected from the Character Selection Matrix.

The encoded column and row data from the plug-in units is selected by the Column Data Switch and Row Data Switch stages respectively. These stages take the analog current from the eight data lines (two channels from each of the four plug-in compartments) and produce a time-multiplexed analog voltage output containing all of the column and row information from the plug-ins. The Column Data Switch and Row Data Switch are sequenced by the binary Channel Address Code from the Channel Counter.

The time-multiplexed output of the Column Data Switch is monitored by the Display-Skip Generator to determine if it represents valid information that should be displayed. Whenever information is not encoded in a time-slot, the Display-Skip Generator produces an output level to prevent the Timer stage from producing the control signals that normally interrupt the crt display and present a character.

The analog outputs of the Column Data Switch and Row Data Switch are connected to the Column Decoder and Row Decoder stages respectively. These stages sense the magnitude of the analog voltage input and produce an output current on one of ten lines. The outputs of the Column Decoder stage are identified as C-1 through C-10 (column 1 through 10) corresponding to the encoded column information. Likewise, the outputs of the Row Decoder stage are identified as R-1 through R-10 (row 1 through 10) corresponding to the encoded row information. The row and column outputs are then converted to binary coded decimal (BCD) and used to address memory locations within the Character Generator. These outputs are also used at other points within the system to indicate when certain information has been encoded. One such stage is the Zeros Logic and Memory. During time-slot 1 (TS-1), this stage checks if zero-adding or prefix-shifting information has been encoded by the plug-in unit, and stores it in memory until time-slots 5, 6, or 8. After storing this information, it triggers the Display-Skip Generator stage so there is no display during time-slot 1 (as defined by Standard Readout Format; see Table 4-2). When time-slots 5, 6, and 8 occur, the memory is addressed and any information stored there during time-slot 1 is transferred to the input of the Column Decoder stage to modify the analog data during the applicable time-slot.

Another operation of the Zeros Logic and Memory stage is to produce the Identify function. When time-slot 1 is encoded for Identify (column 10, row 3), this stage produces an output level connected with the Row Decimal-to-BCD Converter and the Row and Column Data Switches. This output level connects the Column Data Switch with a coding network within the Readout System to produce an analog current during time-slots 2 through 9. The current is then converted to binary-coded decimal and combined with the Row Decimal-to-BCD Converter output to address locations within the Character Generator necessary to display "IDENTIFY" on the crt. The Zeros Logic and Memory stage is reset after each word by the End-of-Word pulse.

Each character displayed on the crt consists of a series of connected points within an 8-point by 8-point grid. The Character Generator contains grid locations of the points required to create any of the 50 possible characters shown in the Character Selection Matrix of Figure 4-25. The row and column data encoded during a time-slot are converted to BCD and used to address a location within the Character Generator containing the first grid point of the character to be displayed. The 4-bit binary output from the lower order address generator is combined with the address created by the row and column data to provide the other grid points necessary to complete the character.

http://manoman.sqhill.com

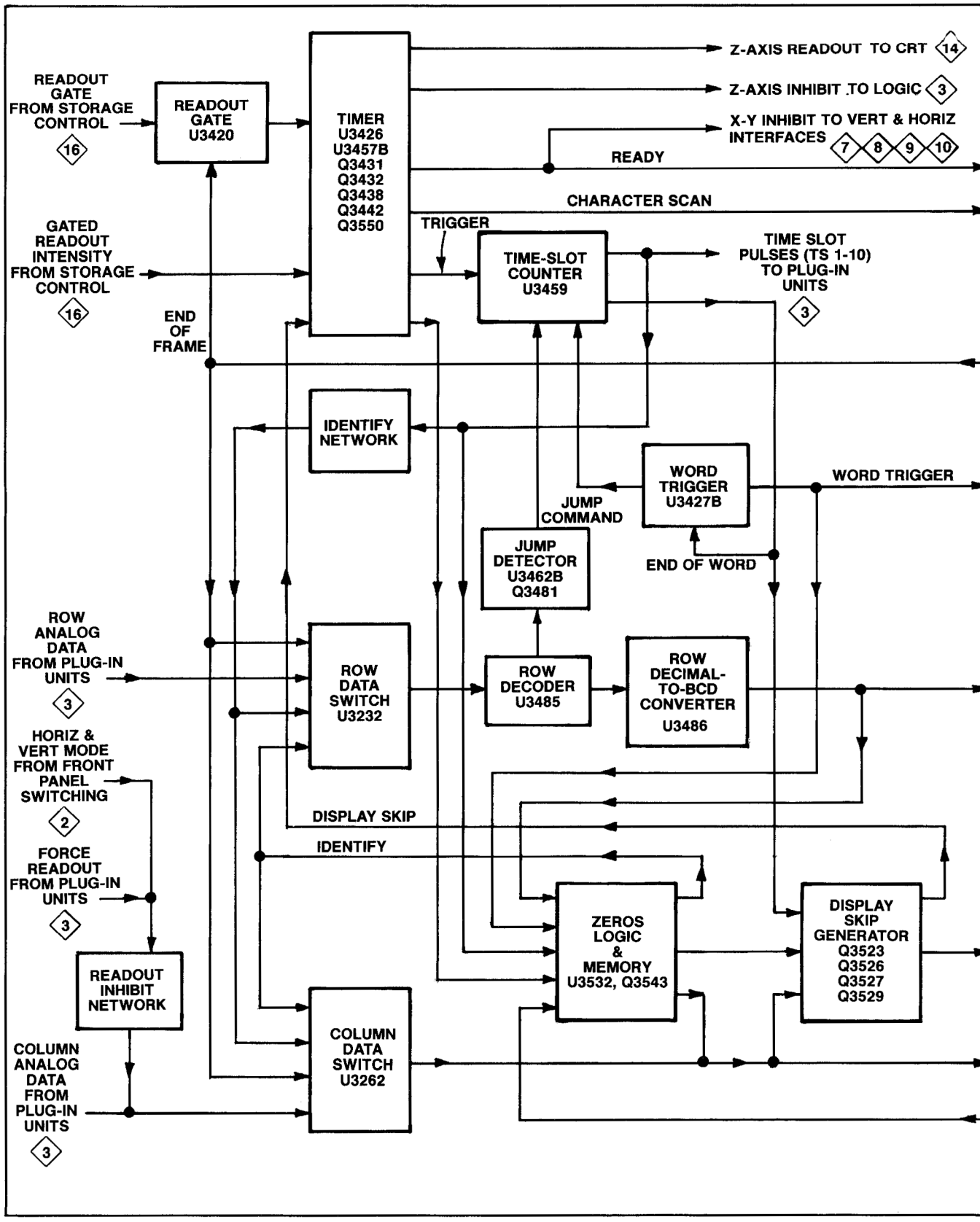

Figure 4-27a. Detailed block diagram of the Readout System.

http://manoman.sqhill.com

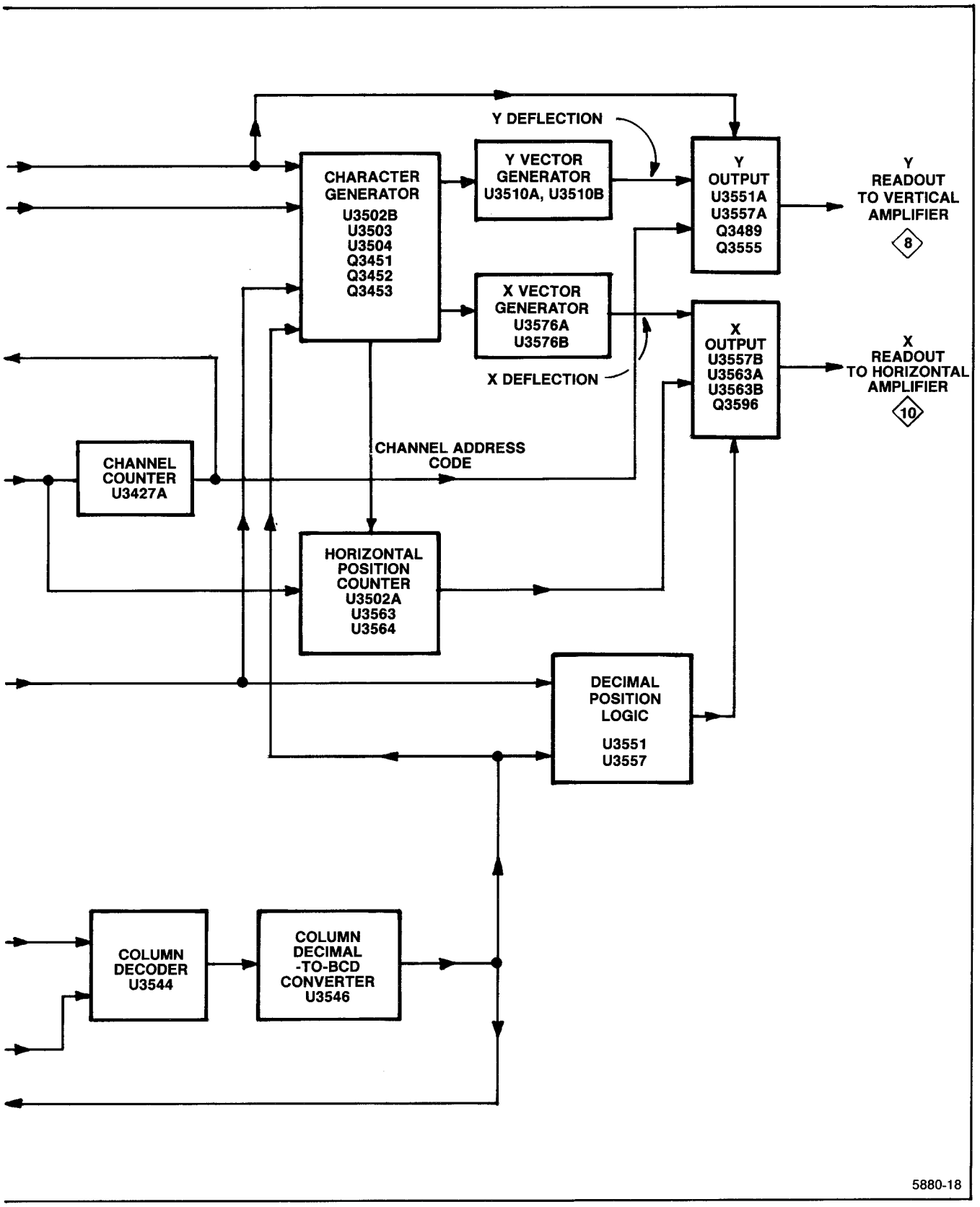

Figure 4-27b. Detailed block diagram of the Readout System.

http://manoman.sqhill.com

Only one character is addressable in any one time-slot or a space can be added into the displayed word by the Horizontal Character Position Counter stage, when encoded by the plug-in. The latter stage counts the number of characters generated and produces an output current to step the display one character position to the right for each character. In addition, the character position is advanced once during each of time-slots 1, 2, and 3 whether a character is generated during these time-slots or not. This action fixes the starting point of the standard-format display such that the first digit of the scaling factor always starts at the same point within each word regardless of the information encoded in time-slot 1, 2, or 3 preceding this digit. Also, by encoding row 10 and column 0 during any time-slot, a blank space can be added to the display. Decimal points can be added to the display at any time by addressing the appropriate row and column (see Character Selection Matrix for location of decimal points). The Horizontal Position Counter stage is reset after each word by the Word Trigger pulse.

The Character Generator's binary output is shaped by the X and Y Vector Generators into the appropriate X- and Y-axis signals to create characters. The Vector Generator outputs are amplified by the X and Y Output Amplifiers for use by the horizontal and vertical deflection systems. The Channel Counter output is also used by these stages so the display from each channel is positioned to the area of the crt which is associated with the plug-in and channel originating the word (see Figure 4-24). The character positioning current or decimal positioning current generated by the Horizontal Position Counter or Decimal Point Logic stages is added to the X (horizontal) signal at the input to the X Output Amplifier, providing horizontal positioning of the characters within each word.

The Word Trigger stage produces a trigger from the End-of-Word pulse generated by the Time-Slot Counter stage after the tenth time-slot. This Word Trigger pulse advances the Channel Counter to display the information from the next channel or plug-in. This Word Trigger stage can also be advanced to jump a complete word, or a portion of a word, when a Jump Command is received from the Row Data Switch stage.

The following discussion describes the operation of the various circuits in the Readout System in more detail.

Timer

Timer stage U3426 establishes the timing sequence for all circuits within the Readout System. This stage produces six time-related output waveforms (see Figure 4-28). The triangle waveform produced at pin 6 forms the basis for the remaining signals. The basic period of this triangle waveform is about 250 microseconds as controlled by RC network R3435 and C3435 at pin 6. The triangle waveform is clipped and amplified by U3426 to form the trapezoidal output signal at pin 10. The amplitude of this output signal is exactly 15 volts as determined by U3426 (precise amplitude necessary to accurately encode data in plug-in units; see Encoding the Data). The trigger output at pin 5 provides the switching signal for the Time-Slot Counter and Word Trigger stages.

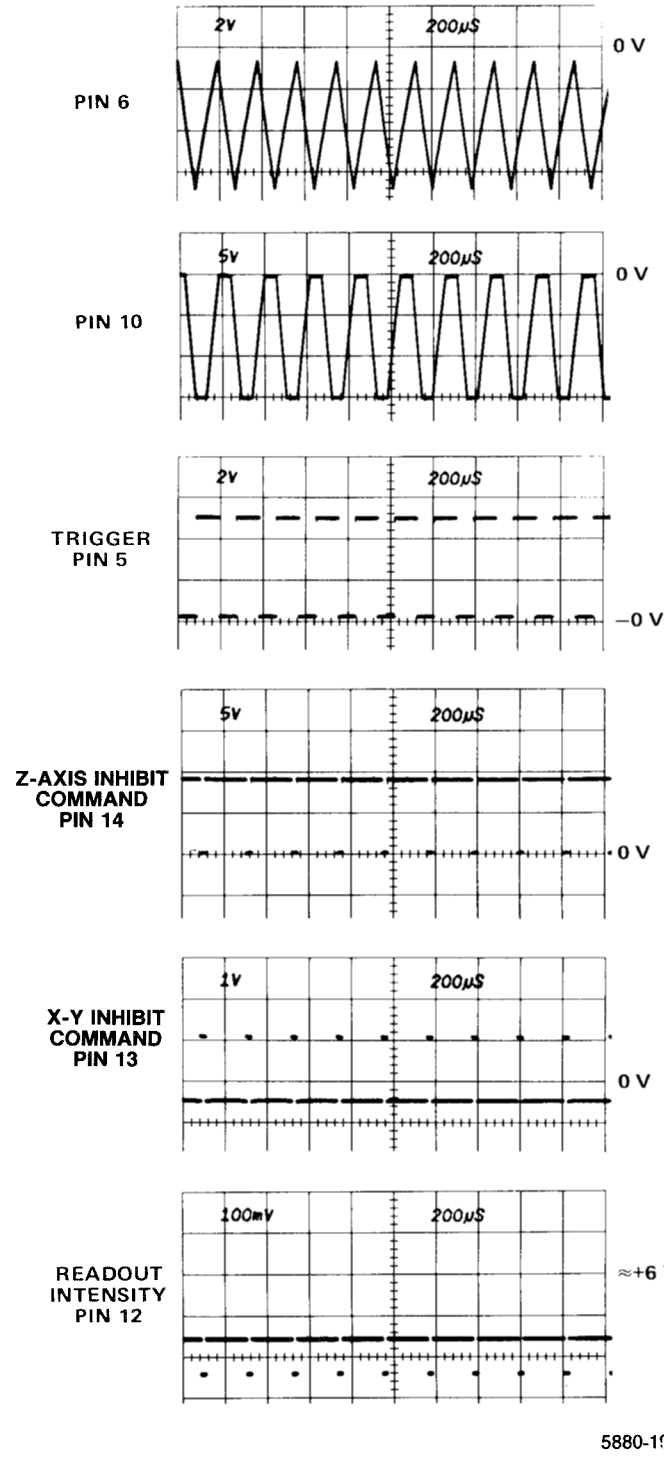

Figure 4-28. Output waveforms of the Timer stage.

http://manoman.sqhill.com

The signals at pins 12, 13, and 14 are produced only when the triangle waveform is on its negative slope and the trapezoidal waveform has reached the lower level. The timing sequence of these waveforms is important to the operation of the Readout System (see expanded waveforms in Figure 4-29). The Z-Axis Inhibit command at pin 14 is produced first. This negative-going signal provides a blanking pulse to the Z-Axis Logic stage (see diagram 4) to blank the crt before the display is switched to the Readout System. It also produces the strobe pulse through Q3438 and CR3439 which is connected to pin 15 of the Zeros Logic and Memory stage U3532.

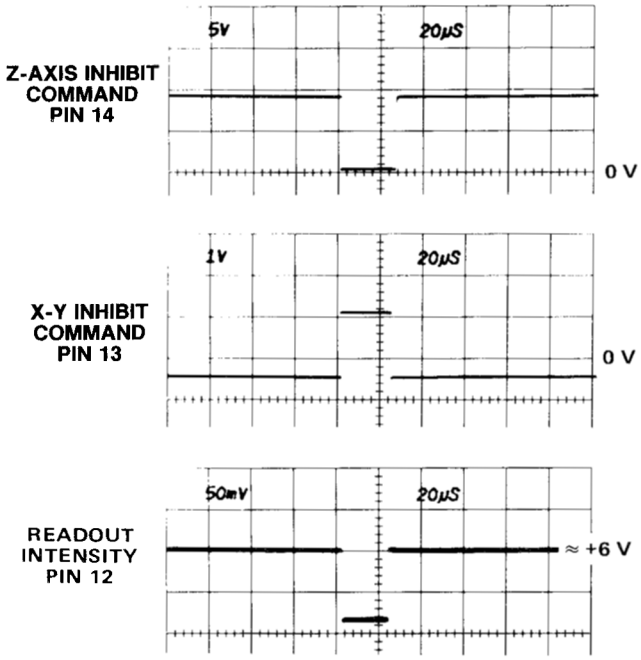

Figure 4-29. Detail of output at pins 12, 13, and 14 of U3426.

The purpose of this configuration is to prevent the Zeros Logic and Memory stage from storing incorrect data during the quiescent period of the strobe pulse. When the strobe pulse goes positive, CR3439 is reverse biased to disconnect Q3438 and allow U3532 to operate in the normal manner.

The next signal to be produced is the X-Y Inhibit Command at pin 13. This positive-going signal disconnects the plug-in signals from the vertical and horizontal deflection systems. The Ready signal is also derived from this output and connected to Character Generator stage U3502B through Q3442 and the two Output Amplifier stages through U3457B and Q3550.

The Readout Intensity output at pin 12 is produced next. This current is connected to the crt circuit through Q3452 to unblank it to the intensity level determined by the voltage on the Readout Intensity line.

The Timer stage operates in one of two modes as controlled by the Display-Skip level at pin 4. The basic mode just described is a condition that does not occur unless all ten characters of each word (80 characters total) are displayed on the crt. Under typical conditions, only a few characters are displayed in each word. The Display-Skip level at pin 4 determines the period of the Timer output signal. When a character is to be generated, pin 4 is LO and the circuit operates as just described. However, when a character is not to be displayed, a HI level is applied to pin 4 of U3426 through CR3425 from the Display-Skip Generator stage. This signal causes the Timer to shorten its period of operation to about 210 microseconds. The waveforms in Figure 4-30 show the operation of the Timer stage when the Display-Skip condition occurs for all positions in a word. Notice that there is no output at pins 12, 13, and 14 under this condition. This means that the crt display is not interrupted to display characters. Also notice that the triangle waveform at pin 6 does not go as far negative, and that the negative portion of the trapezoidal waveform at pin 10 is shorter. Complete details on operation of the Display-Skip Generator are given later.

The Timer operation is also controlled by the Readout Gate level at pin 2. If this level is LO, the Timer operates as just described. However, if the Readout Gate sets a HI level at this pin, the Timer stage is locked out and can not produce any output signals (see Readout Gate description for further information).

A negative voltage on the Readout Intensity line sets the intensity of the readout display independently of the A or B INTENSITY controls. The Readout Intensity line also provides a means of turning the Readout System off when a readout display is not desired. When the Readout Intensity line is left open, the current from pin 11 of U3426 is interrupted, and at the same time, a positive voltage is applied to pin 4 through CR3424. This positive voltage switches the stage to the same conditions as were present under the Display-Skip condition. Therefore, the crt display is not interrupted to present characters. However, time-slot pulses continue to be generated.

Time-Slot Counter

Time-Slot Counter U3459 is a sequential switch which directs the trapezoidal waveform input at pin 8 to one of its 10 output lines. These time-slot pulses are used to interrogate the plug-in units to obtain data for the Readout System. The Trigger pulse at pin 15 switches the Time-Slot

http://manoman.sqhill.com

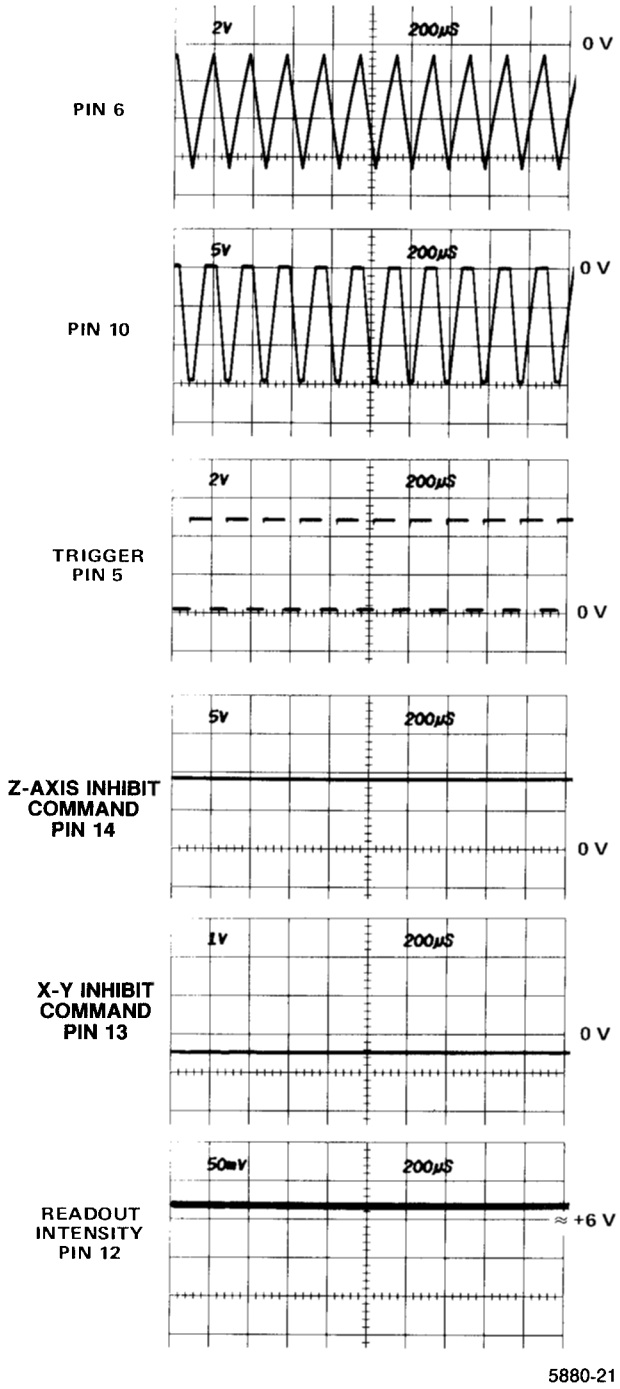

Figure 4-30. Timer stage operation when display-skip condition occurs.

Counter to the next output line, causing the output signal to be sequenced consecutively from time-slot 1 through time-slot 10. Figure 4-31 shows the time relationship of the time-slot pulses. Notice that only one line carries a time-slot pulse at any given time. When time-slot 10 is completed, a negative-going End-of-Word pulse is produced at pin 2. The End-of-Word pulse provides a drive pulse for Word Trigger stage U3427B and also provides an enabling level to the Display-Skip Generator during time-slot 1 only.

Pin 16 is a reset input for the Time-Slot Counter. When this pin is LO, the Time-Slot Counter resets to time-slot 1.

Word Trigger

Word Trigger U3427B is a single-shot multivibrator that provides a reset pulse for Horizontal Position Counter U3502A. The negative-going End-of-Word pulse from pin 2 of U3459 triggers the single shot and causes its output at pin 11 to go HI.

Channel Counter

Channel Counter U3427A is a binary counter that produces the Channel Address Code for the Column and Row Data Switches and the Output Amplifier stage. This code instructs these stages to sequentially select and display the eight channels of data from the plug-ins.

Readout Gate

The Readout Gate stage allows a single readout frame (eight complete words) to be displayed on the crt, after which the Readout System is locked out so further readout displays are not presented until the circuit is reset. U3420A and U3420B are connected to form a bistable flip-flop. For free-run operation, pin 2 of U3420A is held HI. This activates U3420A and results in a LO output level at pin 1, enabling the Timer stage to operate in a free-running manner.

The output of the Readout Gate stage remains LO to allow Timer U3426 to operate in the free-running mode until a LO is received at pin 2 of U3420A. When this occurs, the output level at pin 1 of U3420A does not change immediately. However, the Readout Gate stage is now enabled.

If the Channel Counter has not completed word 8, the Readout System continues to operate in the normal manner. When word 8 is completed, the negative-going End-of-Frame pulse is produced at pin 5 of U3427A as the Channel Counter shifts to the code necessary to display word 1. This pulse is applied to pin 8 of U3420C, which produces a HI at pin 6 of U3420B because of the momentary LO at pin 9. The HI at pin 6 produces a LO at pin 4, which causes pin 3 of U3420A to go LO. Because pin 2 is already LO, pin 1 goes HI. This disables the Timer stage so it operates in the Display-Skip mode.

http://manoman.sqhill.com

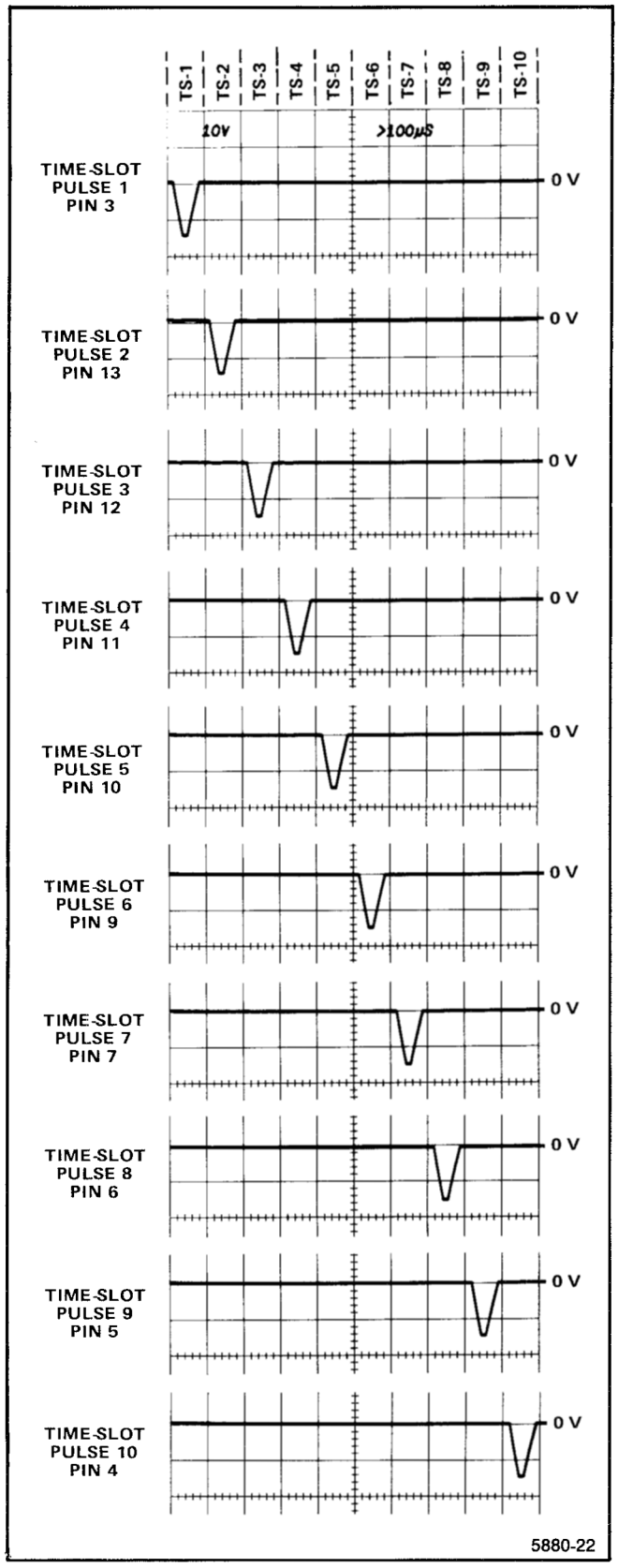

Figure 4-31. Time relationship of the time-slot (TS) pulses produced by U3459.

The Readout Gate stage remains in this condition until a positive-going trigger pulse is applied to pin 2 of U3420A. This trigger pulse produces a LO at pin 1 of U3420A to enable U3426 and disable U3420B. Now, the Timer stage can operate in the normal manner for another complete frame. When word 8 is completed, the Channel Counter produces another End-of-Frame pulse to again lock out the Timer stage.

Encoding the Data

Data is conveyed from the plug-in units to the Readout System in the form of an analog (current level) code. The characters that can be selected by the encoded data are shown on the Character Selection Matrix (see Figure 4-25). Each character or special function requires two currents to define it (except Jump, which requires only one). These currents are identified as the column current and the row current, corresponding to the column and row of the matrix. The column and row data is encoded by programming in the plug-in units.

Figure 4-32 shows a typical encoding scheme using resistors for a voltage-sensing amplifier plug-in unit. Notice that the 10 time-slot pulses produced by the Time-Slot Counter stage are connected to the plug-in unit. However, time-slots 5, 6, and 10 are not used by the plug-in unit to encode data when using the Standard Readout Format (see Table 4-2). The amplitude of the time-slot pulse is exactly −15 volts as determined by the Timer stage. Therefore, the resultant output current from the plug-in units can be accurately controlled by the programming resistors in the plug-in units.

For example, in Figure 4-32 resistors R10 though R90 control the row analog data, which is connected back to the Readout System. Figure 4-33 shows an idealized output current waveform of row analog data, which results from the time-slot pulses. Each of the row-current levels shown in these waveforms correspond to 100 microamps of current. The row numbers on the left-hand side of the waveform correspond to the rows in the Character Selection Matrix (see Figure 4-25). The row analog data is connected back to the Readout System via terminal B37 of the plug-in interface.

The column analog data is defined by resistors R110 through R190. These program resistors are connected to the time-slot lines by switch closures to encode the desired data. The data as encoded by the circuit shown in Figure 4-32 indicates a 100 microvolt sensitivity with the crt display showing inverted and calibrated deflection factors. This results in the idealized output current waveform shown in Figure 4-33B at the column analog data output, terminal A37 of the plug-in interface.

http://manoman.sqhill.com

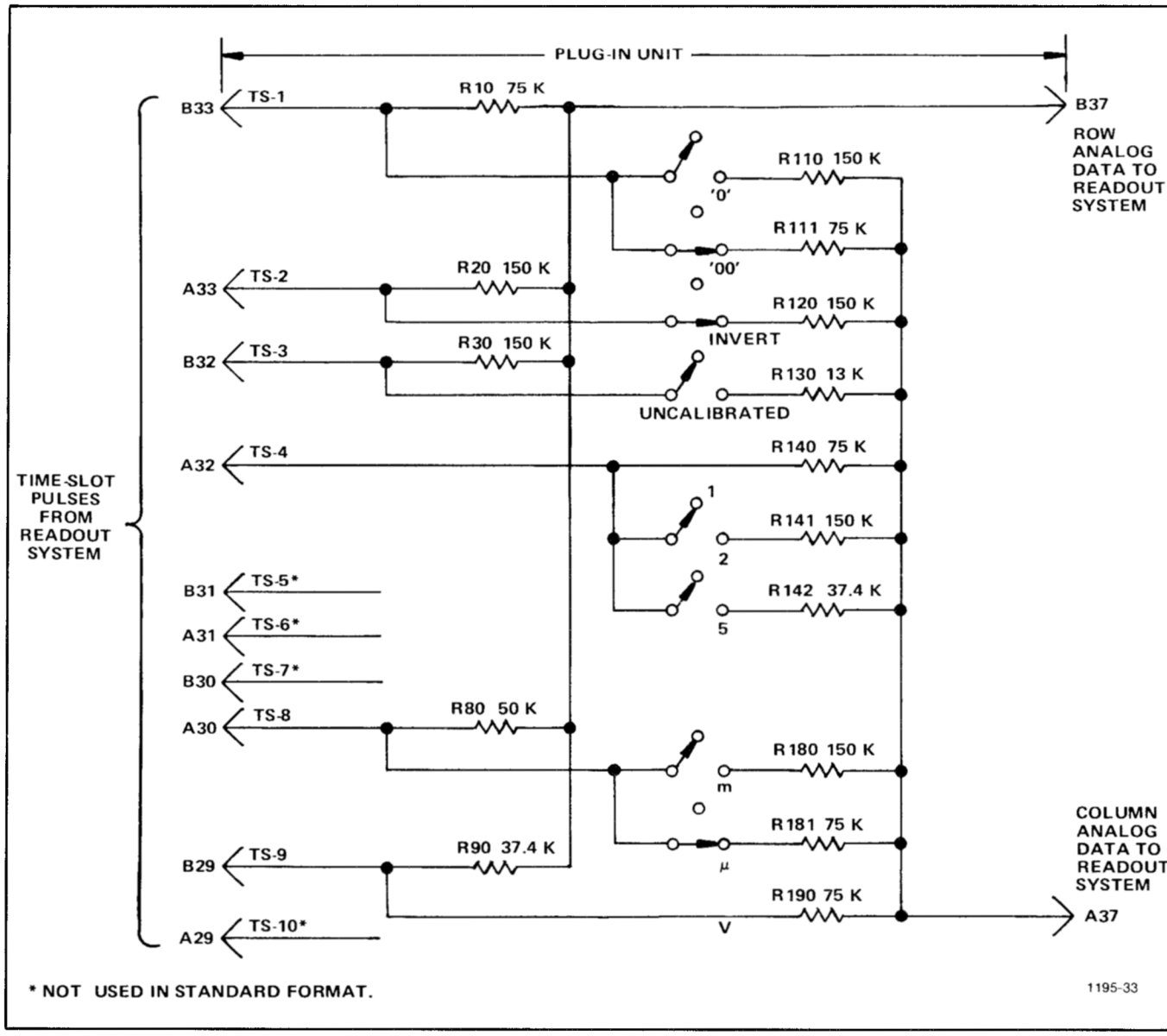

Figure 4-32. Typical encoding scheme for voltage-sensing plug-in unit. Coding shown for deflection factor of 100 microvolts.

Resistor R111, connected between time-slot 1 and the column analog data output, encodes two units of current during time-slot 1. Referring to the Character Selection Matrix (Figure 4-25), two units of column current, along with the two units of row current encoded by resistor R10 (row 3), indicates that two zeros should be added to the display. Resistor R120 adds one unit of column current during time-slot 2, and along with the one unit of current from the row output the Readout System is instructed to add an invert arrow to the display. Resistor R130 is not connected to the time-slot 3 line, since the deflection factor is calibrated. Therefore, there is no display on the crt during time slot 3 (see Display-Skip Generator for further information).

During time slot 4, two units of column current are encoded by R140. There is no row current encoded during this time slot; this results in the numeral 1 being displayed on the crt. Neither row nor column analog data is encoded during time-slots 5, 6, and 7 as defined by the Standard Readout Format shown in Table 4-2. During time-slot 8, two units of column current and three units of row current are encoded by resistors R181 and R80, respectively. This addresses the micro prefix in the Character Selection Matrix (Figure 4-25). The final data output is provided from time-slot 9 by R190 connected to the column output and R90 to the row output. These resistors encode two units of column current and four units of row current to cause a V (volts) to be displayed.

http://manoman.sqhill.com

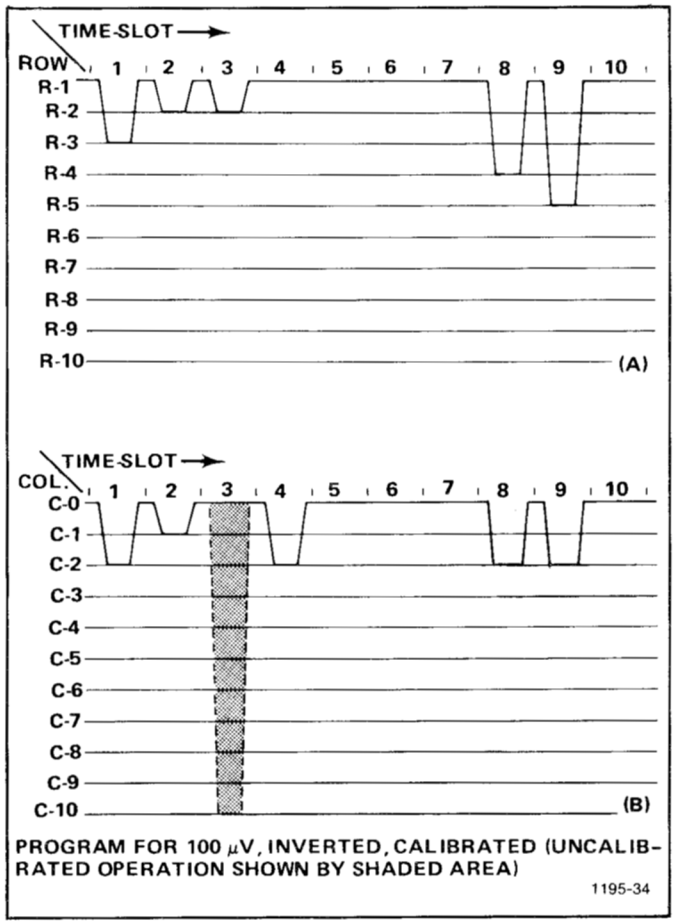

Figure 4-33. Idealized current waveforms of; (A) Row analog data and (B) Column analog data.

Time-slot 10 is not encoded, in accordance with the Standard Readout Format. The resultant crt readout will be ↓ 100 μV.

In the above example, the row analog data was programmed to define which row of the Character Selection Matrix was addressed to obtain information in each time-slot. The column data changes to encode the applicable readout data as the operating conditions change. For example, if the variable control of the plug-in unit was activated, R130 would be connected between time-slot 3 and the column analog data output line. This encodes 10 units of column current (see shaded area in time-slot 3 of the waveform shown in Figure 4-33). Since one unit of row current is also encoded during this time-slot by R30, a > (greater than) symbol is added to the display. The crt readout will now show ↓ >100 μV. In a similar manner, the other switches can change the encoded data for the column output and thereby change the readout display. See the descriptions which follow for decoding this information.

The column analog data encoded by most plug-in units can be modified by attenuator probes connected to the input connectors of amplifier plug-in units. A special coding ring around the input connector of the plug-in unit senses the attenuation ratio of the probe (with readout-encoding probes only). The probe contains a circuit that provides additional column current. For example, if a 10X attenuator probe is connected to a plug-in unit encoded for 100 microvolts as shown in Figure 4-32, an additional unit of current is added to the column analog data during time-slot 1. Since two units of current were encoded by R111, this additional current results in a total of three units of column analog current during this time-slot. Referring to the Character Selection Matrix (Figure 4-25), three units of column current, along with the two units of row current encoded by R10, indicates that the prefix should be shifted one column to the left. Since this instruction occurs in the same time-slot that previously indicated that two zeros should be added to the display and only one instruction can be encoded during a time-slot, the zeros do not appear in the display. The crt readout will now be changed to 1 mV (readout program produced by plug-in same as for previous example).

Three other lines of information are connected from the plug-in compartments to the Readout System. The column and row analog data from channel 2 of a dual-channel plug-in are connected to the Readout System through terminals A38 and B38 of the plug-in interface, respectively. Force readout information is encoded on terminal A35; the function of this input is described under Column and Row Data Switches. The preceding information gave a typical example of encoding data from an amplifier plug-in unit. Specific encoding data and circuitry is shown in the individual plug-in unit manuals.

Column and Row Data Switches

The encoded data from the plug-in units is connected to the Column and Row Data Switch stages. A column-data line and a row-data line convey analog data from each of the eight data sources (two channels from each of the four plug-in compartments).

The Column Data Switch U3262 and the Row Data Switch U3232 receive the Channel Address Code from the Channel Counter. This binary code directs the Column Data Switch and the Row Data Switch to the channel which is the source of the encoding data. These stages have nine inputs and provide a time-multiplexed output at pin 7, which includes the information from all of the input channels. Eight of the nine inputs to each stage originate in the plug-in units; the ninth input (Column Data Switch only) comes from a special data-encoding network composed of Resistors R241 through R248 (see Zeros Logic and Memory description for further information on the ninth channel).

http://manoman.sqhill.com

In addition to the encoded data inputs from the plug-in units, inputs are provided to the Column Data Switch from the VERTICAL MODE and HORIZONTAL MODE switches to inhibit the readout for any plug-in unit(s) not selected for display. When a unit is not selected, the line corresponding to the opposite channel is HI to forward bias the associated diodes; CR212 and CR213, CR214 and CR215, CR216 and CR217, or CR218 and CR219. The forward-biased diodes cause the channel switches to bypass the encoded data from the inhibited channel. However, since it may be desired to display information from special-purpose plug-in units (even though they do not produce a normal waveform display on the crt), a feature is provided to over-ride the channel inhibit. This is done by applying a LO to the associated Force Readout input. The LO level diverts the HI channel-inhibit current and allows the data from this plug-in unit to reach the Column Data Switch, even though it has not been selected for display by the mode switch.

Display-Skip Generator

The Display-Skip Generator is made up of Q3523, Q3526, Q3527, and Q3529. This stage monitors the time-multiplexed column data at the output of the Column Data Switch during each time-slot to determine if the information at this point is valid data that should result in a crt display. Quiescently, about 100 microamps of current flows through R3542 from Q3543 and the Zeros Logic and Memory stage. (The purpose of this quiescent current will be discussed in connection with the Zeros Logic and Memory stage.) This current biases Q3523A so that its base is more positive than the base of Q3523B in the absence of column data. Therefore, since Q3523A and Q3523B are connected as a comparator, Q3523A remains on unless its base is pulled more negative than the base of Q3523B.

The analog data output from the Column Data Switch produces about a 0.5 volt change for each unit of column current that has been encoded by the plug-in unit. Whenever information appears at the output of the Column Data Switch, the base of Q3523A is pulled more negative than the base of Q3523B, resulting in a negative (LO) Display-Skip output to the Timer stage through Q3529. Recall that a LO was necessary at the skip input of the Timer so it could perform the complete sequence necessary to display a character.

Transistors Q3526 and Q3527 also provide Display-Skip action. The End-of-Word level connected to their emitters is LO only during time-slot 1. This means they are enabled only during this time-slot. These transistors allow the Zeros Logic and Memory stage to generate a Display-Skip signal during time-slot 1 when information that is not to be displayed on the crt has been stored in memory. (Further information is given under Zeros Logic and Memory.)

Column and Row Decoders

Column Decoder U3544 and Row Decoder U3485 sense the magnitude of the analog voltages at their inputs (pin 10) and produce a binary output on one of ten lines corresponding to the column or row data encoded by the plug-in unit. These outputs provide the Column Digital Data and Row Digital Data, which is encoded by the Decimal-to-BCD converters to create the address used by the Character Generator in determining which character to display. The column and row data is also used throughout the Readout System to perform other functions.

The input current at pin 10 of the Column Decoder stage is steered to only one of the ten Column Digital Data outputs. When a Display-Skip signal is present (collector of Q3529 HI), pin 9 is pulled HI through CR3529. This ensures that no current is connected to the Character Generator stage under this condition. Notice that the corresponding input on the Row Decoder is connected to ground and causes only one of the ten row outputs to saturate to ground.

Column Match adjustment R3543 and Row Match adjustment R3483 determine the input level to the Column Decoder and Row Decoder respectively. This sets the output for correct display of the readout characters.

Jump Detector

The network at the input of the Row Decoder, made up of Q3481 and its associated components, is a Row-14 detector that produces the Jump Command. This row current is encoded by special-purpose plug-ins to cause all or part of a word to be jumped. Whenever row 14 (13 units of row current or 1.3 milliamps) is encoded, the base of Q3481 is pulled negative enough so that this transistor is forward biased to produce a LO Jump Command output at its emitter. The Jump Command is connected to the set input of RS flip-flop U3462B, whose reset input is connected to the Trigger Signal from pin 5 of the Timer. When the Jump Command and Trigger inputs are low, U3462B produces a LO output to reset the Time-Slot Counter as well as advancing the Horizontal Position Counter and the Channel Counter. U3462B also produces a HI output to signal Display Skip at pin 4 of the Timer.

Zeros Logic and Memory

The Zeros Logic and Memory stage U3532 stores data encoded by the plug-in units to provide zeros-adding and prefix-shifting logic for the Readout System. The Strobe pulse at pin 15 goes positive when the data has stabilized and can be inspected. This activates the Zeros Logic and Memory stage so that it can store the encoded data.

http://manoman.sqhill.com

Typical output waveforms for the five possible input conditions that can occur are shown in Figure 4-34. When time-slot 1 occurs, a store command is given to all of the memories. If the plug-in units encoded data for column 1, 2, 3, 4, or 10 during time-slot 1, the appropriate memory (or memories) is set. Notice that row 3 information from the Row Decoder must also be present at pin 16 for data to be stored in the memory of U3532.

If data was encoded during time-slot 1, a negative-going output is produced at pin 7 while the memories are being set. This negative-going pulse is connected to the base of Q3527 in the Display-Skip Generator to produce a Display-Skip output. Since the information encoded during time-slot 1 was only provided to set the memories and not intended to be displayed on the crt at this time, the Display-Skip output prevents a readout display during this time-slot.

INPUT PIN OF U3532 ACTIVATED	COMMAND	TIME-SLOTS
14	IDENTIFY	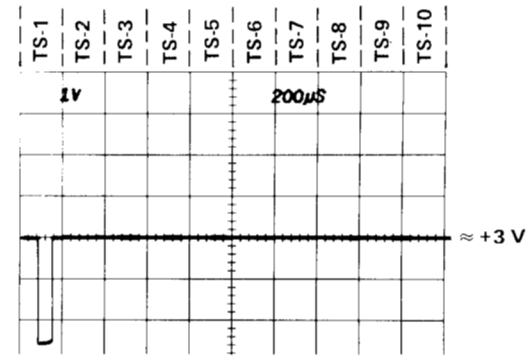
12	ADD ONE ZERO	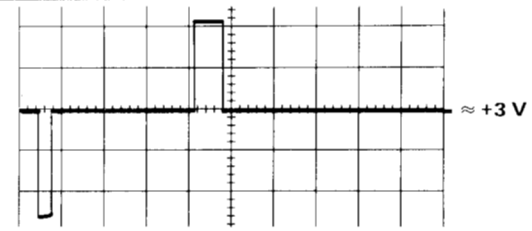
13	ADD TWO ZEROS	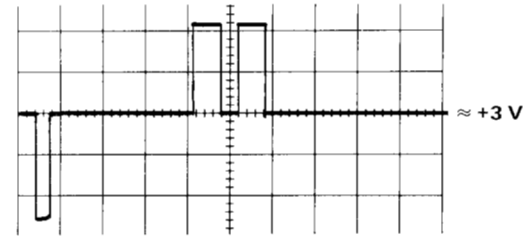
10	DECREASE PREFIX	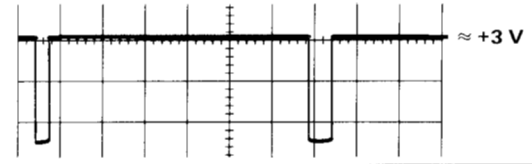
11	DECREASE PREFIX AND ADD ONE ZERO	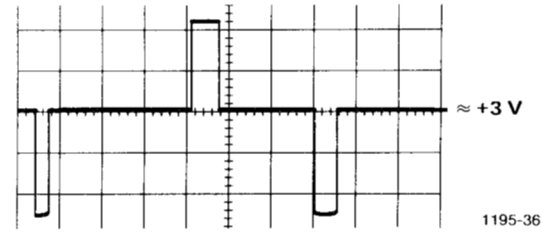

Figure 4-34. Typical output waveforms for Zeros Logic and Memory stage operation (at pin 7 of U3532).

http://manoman.sqhill.com

During time-slot 5, a memory within U3532 is interrogated. If information was stored in this memory, a positive-going output is produced at pin 7. This pulse is connected to pin 10 of the Column Decoder through Q3543 to add one unit of current at the input of the Column Decoder. This produces a zero after the character displayed during time-slot 4. During time-slot 6, another memory within U3532 is interrogated to see if another zero should be added. If another zero is necessary, a second positive output is produced at pin 7, which again results in a column 1 output from the Column Decoder and a second zero in the crt display.

Finally, a third memory within U3532 is interrogated during time-slot 8 to determine whether the prefix should be changed, or left at the value that was encoded. If data has been encoded that calls for a shift in prefix, a negative-going output level is produced at pin 7. This negative level subtracts one unit of column current from the data at the input to the Column Decoder. Notice on the Character Selection Matrix (Figure 4-25) that when row 4 is programmed, a reduction of one column results in a one-column shift of the prefix. For example, with the 100 uV program shown in Fig. 4-32, if the data received from the plug-in called for a shift in prefix, the crt readout would be changed to 1 mV (zeros deleted by program; see Encoding the Data).

The 100 microamps of quiescent current through R3542 provided by Q3543 (see Display-Skip Generator) allows the prefix to be shifted from m (100 microamps of column current, column 1) to no prefix (0 column current, column 0) so only the unit of measurement encoded during time-slot 9 is displayed. Notice that reducing the prefix program from column 1 to column 0 programs the Readout System to not display a character at this readout location.

A further feature of the Zeros Logic and Memory is the Identify function. If 10 units of column current are encoded by the plug-in unit along with row 3 during time-slot 1, the Zeros Logic and Memory produces a negative-going output pulse at pin 1 to switch the Column Data Switch and Row Data Switch to the ninth channel. Then, time-slot pulses 2 through 9 encode the identify input current through resistors R241 to R248 for column data. Pin 10 of the Row Decimal-to-BCD Converter is also enabled by the output at pin 1 of U3532. This provides the addresses necessary to display the word IDENTIFY in the word position allotted to the channel that originated the Identify command. After completion of this word, the Column Data Switch and Row Data Switch continue with the next word in the sequence.

The End-of-Word signal from the Time-Slot Counter is connected to pin 9 of U3532 through C3539. At the end of each word of readout information, this pulse goes LO. This erases the memories in the Zeros Logic and Memory in preparation for the data to be received from the next channel.

Character Generator

Each character to be displayed on the crt consists of a series of connecting points developed on a possible 8 x 8 point grid (see Figure 4-35). The 8-bit binary output from the Character Generator is used to determine the location of points within the grid, whether or not to provide a trace connecting two points, and the point at which a character has been completed. The Character Generator stage consists of an oscillator, the Lower Order Address Generator, and an EPROM connected to a latch.

Q3451 and Q3452 form a square-wave oscillator whose frequency is adjustable with C3455 to provide 16 cycles within the time allotted for developing a character. The base of Q3452 goes LO when the Timer produces a negative-going Ready pulse at pin 13 (connected through Q3442, U3457B, and CR3457). This starts the oscillator by turning Q3452 on. The emitter of Q3451 becomes more negative as C3454 and C3455 discharge through R3454. The capacitors continue to discharge until the emitter-base junction of Q3451 becomes forward biased. Q3451 then begins to conduct and causes the oscillator to begin changing states. As Q3451 conducts, the discharge through C3454 and C3455 stops and causes a collector current reduction in Q3452. The current reduction causes the emitter and base of Q3452 to rise positive which pulls the emitter of Q3451 along with them through C3454 and C3455. This positive shift on the emitter of Q3451 turns it off. Now with C3451 conducting and Q3452 turned off, the voltage on the emitter of Q3452 begins to go negative with C3454 and C3455 beginning to charge through R3455. When the emitter-base junction of Q3452 becomes forward biased, the oscillator again changes states and completes one cycle.

The signal produced by the oscillator at the collector of Q3452 switches Q3453 on and off to create the clock pulses used by the Lower Order Address Generator and the EPROM latch. The oscillator continues to run until the Timer Ready signal goes positive and pulls up the base of Q3452.

The Lower Order Address Generator U3502B is a 4-bit binary counter. The negative-going Timer Ready pulse, inverted by Q3442, resets U3502B at pin 12. The oscillator is also enabled by the Ready signal and begins providing the clock input at pin 13. The counter begins at count 0000 and counts at the frequency of the oscillator, continuing to do so until the Ready signal goes positive. The Lower Order Address Generator's 4-bit output is connected to the four lower order address inputs on Character Generator U3503.

U3504 is an octal D-type flip-flop used as a latch to stabilize and synchronize the Character Generator EPROM output. It is reset by the same signal that starts the oscillator and is clocked at pin 11 by the oscillator output from Q3453. U3504 will be considered part of the Character Generator in the discussion that follows.

http://manoman.sqhill.com

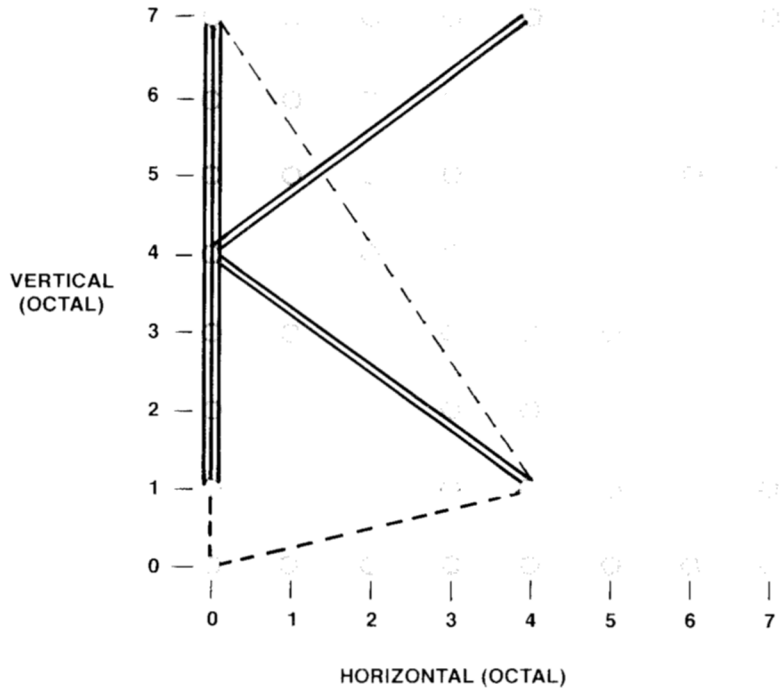

"K" CHARACTER

CHARACTER GENERATOR ADDRESS (HEXIDECIMAL)	CHARACTER GENERATOR OUTPUT		BIT 7 MOVE - - - - DRAW ———	BIT 8 END OF CHARACTER?
	BINARY 8 7 6 5 4 3 2 1	OCTAL		
B 9 0	0 0 0 0 0 0 0 0	0 0 0	MOVE	NO
B 9 1	0 0 0 0 1 0 0 0	0 1 0	MOVE	NO
B 9 2	0 1 1 1 1 0 0 0	1 7 0	DRAW	NO
B 9 3	0 1 0 0 1 0 0 0	1 1 0	DRAW	NO
B 9 4	0 1 1 1 1 0 0 0	1 7 0	DRAW	NO
B 9 5	0 0 0 0 1 1 0 0	0 1 4	MOVE	NO
B 9 6	0 1 1 0 0 0 0 0	1 4 0	DRAW	NO
B 9 7	0 1 1 1 1 1 0 0	1 7 4	DRAW	NO
B 9 8	0 1 1 0 0 0 0 0	1 4 0	DRAW	NO
B 9 9	0 1 0 0 1 1 0 0	1 1 4	DRAW	NO
B 9 A	1 0 0 0 0 0 0 0	2 0 0	MOVE	YES

5880-23

Figure 4-35. Developing a typical character on the crt.

Character Generator U3503 is a 4k x 8-bit EPROM which contains the binary words used by the output stages to create the signals necessary to form readout characters. There are 12 address inputs, with the lower four coming from Lower Order Address Generator U3502B, the center four from Column Decimal-to-BCD Converter U3546, and the upper four from Row Decimal-to-BCD Converter U3486. As previously mentioned, each character is developed on an 8 x 8 point grid (see Figure 4-35 for a typical character). The Character Generator's 8-bit output provides the information necessary to move the instrument beam around within the grid, to turn the beam on and off, and to indicate when a character is complete.

The row and column data cause a 4-bit binary code to be generated at the outputs of the Row and Column Decimal-to-BCD Converters when a readout character is to be displayed. The Lower Order Address Generator is enabled and also provides a 4-bit binary code. These 12 bits are combined to form the EPROM address containing the 8-bit binary word which locates the instrument beam at the character's starting grid location.

The 8-bit word can be broken down into four parts. The lower three bits are the horizontal grid coordinate, bits 4 through 6 are the vertical coordinate, bit 7 turns the Z-Axis

http://manoman.sqhill.com

Readout on and off, and bit 8 indicates whether or not the character is complete.

The character grid (Figure 4-35) can be thought of as having vertical and horizontal coordinates numbered 0 through 7, with location "0,0" in the lower left corner. The 8-bit binary word from the Character Generator is converted to octal to easier recognize the vertical and horizontal coordinates. A binary "00001010" becomes octal "012". This number causes the crt beam to point at grid coordinates vertical "1" and horizontal "2". The fact that the first octal digit is "0" indicates two things. First it shows that bit 7 of the binary word is LO which turns off Q3432 and disables the Z-Axis Readout signal to the instrument. It also shows that bit 8 is LO so the character is not complete. When bit 7 is HI, it advances the Horizontal character Position Counter for the next character within the readout word.

The 4-bit outputs from the Row and Column Decimal-to-BCD Converters remain the same until the character is complete. However, the Lower Order Address Generator keeps counting and combines with the Row and Column Decimal-to-BCD Converter's outputs to address all EPROM locations necessary to form the readout character.

Suppose the next address produces a Character Generator output of "01111010" or octal "172". The octal digit "1" indicates binary bit 7 is high which turns on Q3432 and enables the Z-Axis Readout output to the instrument. The instrument now provides a trace from the previous vertical and horizontal coordinates to the new ones, vertical "7" and horizontal "2". Thus, the character is formed by a series of binary words causing the crt beam to move or draw between points.

Horizontal Position Counter

Horizontal Position Counter U3502A is a 4-bit binary counter. Its output is converted to current by R3566 through R3569 and added to the X (horizontal) signal for spacing readout characters horizontally on the crt. The counter is reset to "0000" with a Word Trigger pulse from U3427B and is advanced with inputs from two possible sources. The first is a HI End-of-Character signal from pin 19 of U3504. The counter can also be advanced when a Space instruction is encoded by the plug-in unit to cause a space to be left between two characters on the crt. A Space instruction occurs when row 10 from the Row Decoder goes LO and is inverted by U3457D to advance Horizontal Character Position Counter U3502A. No character is displayed in this situation as no character information is stored at the Character Generator addresses formed using row 10.

Time-slots 1, 2, and 3 are also connected to the Space instruction through VR3485, VR3486, and VR3487 respectively. This configuration adds a space to the displayed word during time-slots 1, 2, and 3 even if information is not encoded during these time slots. With this feature, the information which is displayed during time-slot 4 (1-2-5 data) always starts in the fourth character position whether data has been displayed in the previous time-slots or not. Therefore, the resultant crt display does not shift positions as normal/invert or cal/uncal information is encoded by the plug-in.

Decimal Position Logic

The Decimal Position Logic stage allows decimal points to be displayed at five possible locations within a readout word (see Figure 4-36). The decimal location encoded by a plug-in during time-slot 1 is achieved by adding positioning current to the X (horizontal) readout signal. Circuitry for this stage includes five 2-input NOR gates in U3551 and U3557 with precision resistors connected to their outputs. One input of each NOR gate is connected to row 7 on the Row Decoder and the other to one of columns 3 through 7 on the Column Decoder. When a decimal is to be displayed, row 7 goes LO and disables the Horizontal Position Counter by keeping the four outputs of U3564 LO. It also sets one input of the five NOR gates LO. One of columns 3 through 7 also goes LO, depending on which decimal position is encoded, causing the NOR gate to which it is connected to go HI. This HI adds current to the X (horizontal) signal in the amount determined by the resistor connected to the NOR gate's output. Each Character Generator location addressed by row 7 and column 3 through 7 contains information necessary to form a decimal point on the crt in the position indicated. The Horizontal Position Counter resumes normal operation and the Decimal Position Logic is disabled when row 7 goes back HI at the end of the time-slot.

Some plug-ins require decimal points at locations in the readout word other than the five provided by the Decimal Position Logic stage. An additional decimal point can be displayed in any position normally available to characters by encoding row 8 with column 9. The Horizontal Position Counter provides positioning current in this mode and the Decimal Position Logic stage is disabled.

Vector Generators

The Y Vector Generator consists of U3510A and U3510B. Vertical character size adjustment is provided with R3510 as a variable feedback resistor for U3510A. Input to the Vector Generator is provided by the three bits of vertical character information from pins 9, 12, and 15 of Character Generator latch U3504. The digital HIs and LOs across R3506, R3507, and R3508 are mixed as stepped current levels at pin 2 of U3510A. These sudden analog steps are converted into a smooth transition from one level to the next by RCL network R3512, C3512, and L3512. U3510B current buffers the resulting signal to be mixed with the Channel Counter vertical information at the input of the Y Output Amplifier.

http://manoman.sqhill.com

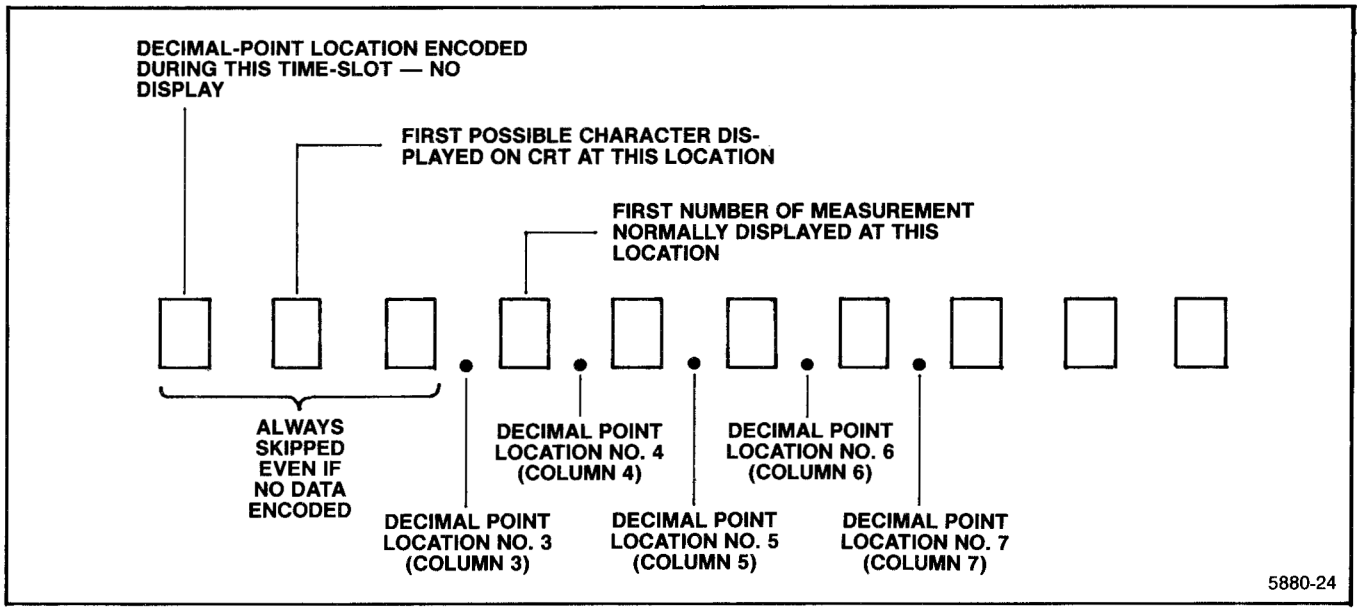

Figure 4-36. Readout word relating 10 possible character locations to the decimal point instructions that can be encoded, and the resultant crt display.

The X Vector Generator operates similarly to the Y Vector Generator. Gain for this stage is fixed by the circuit components and its output is current buffered to be mixed at the input of the X Output Amplifier.

Output Amplifiers

The Y Output Amplifier provides the Y (vertical) signal to the instrument by combining the signal from the Y Vector Generator with the channel 1 or 2 information from the Channel Counter. The amplifier consists of U3557A with Q3555 in its input circuit. Amplifier gain is adjustable with R3560 to control the vertical separation between readout words displayed at the top and bottom of the graticule area. Q3555 switches the amplifier input on and off with the Timer Ready signal, using Q3550 to provide impedance matching. The channel 1 or 2 information from pin 3 of Channel Counter U3427A is inverted by U3551A and converted to current by R3552 and R3553. The Channel Counter produces a LO at pin 3 when the readout word is to be displayed at the top of the graticule. The LO is inverted to a HI by U3551A and adds current to the Y (vertical) readout signal.

The X Output Amplifier consists of U3557B and Q3596. It operates similarly to the Y Output Amplifier to provide the X (horizontal) signal to the instrument. Input to the amplifier is a combination of outputs from the X Vector Generator, Horizontal Position Counter, Decimal Position Logic, and horizontal word position information from the Channel Counter. The gain of this stage is fixed by the resistor values in the circuit.

Display Sequence

Figure 4-37 shows a flow chart for the Readout System. This chart illustrates the sequence of events occurring in the Readout System each time a character is generated and displayed on the crt.

CONVERTER/RECTIFIERS Diagram 12

The Converter/Rectifiers circuit provides the operating power for the 7934 from an ac line-voltage source. Figure 4-38 shows a detailed block diagram of the Converter/Rectifiers circuit. A schematic of the Converter/Rectifiers is given on diagram 12 at the rear of this manual.

Line Input

Power is applied to the 7934 through line filter FL10, line fuse F10, and POWER switch S10. The line filter is designed to keep power line interference from entering the instrument, and to keep the approximate 25-kilohertz inverter signal from entering the power line. Network C5 suppresses reverse-recovery transients of rectifier CR15.

http://manoman.sqhill.com

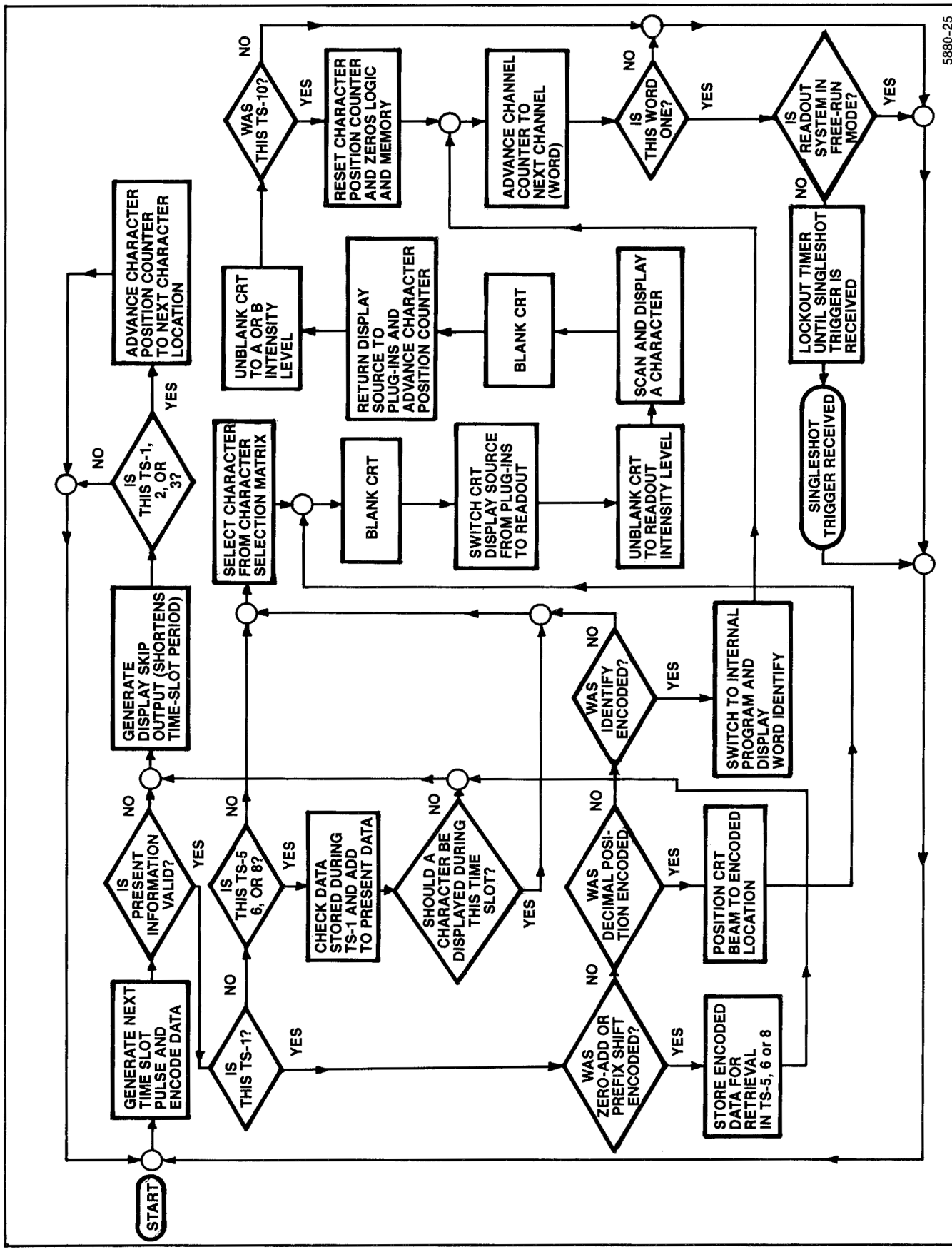

Figure 4-37. Flow chart for character generation by the Readout System.

http://manoman.sqhill.com

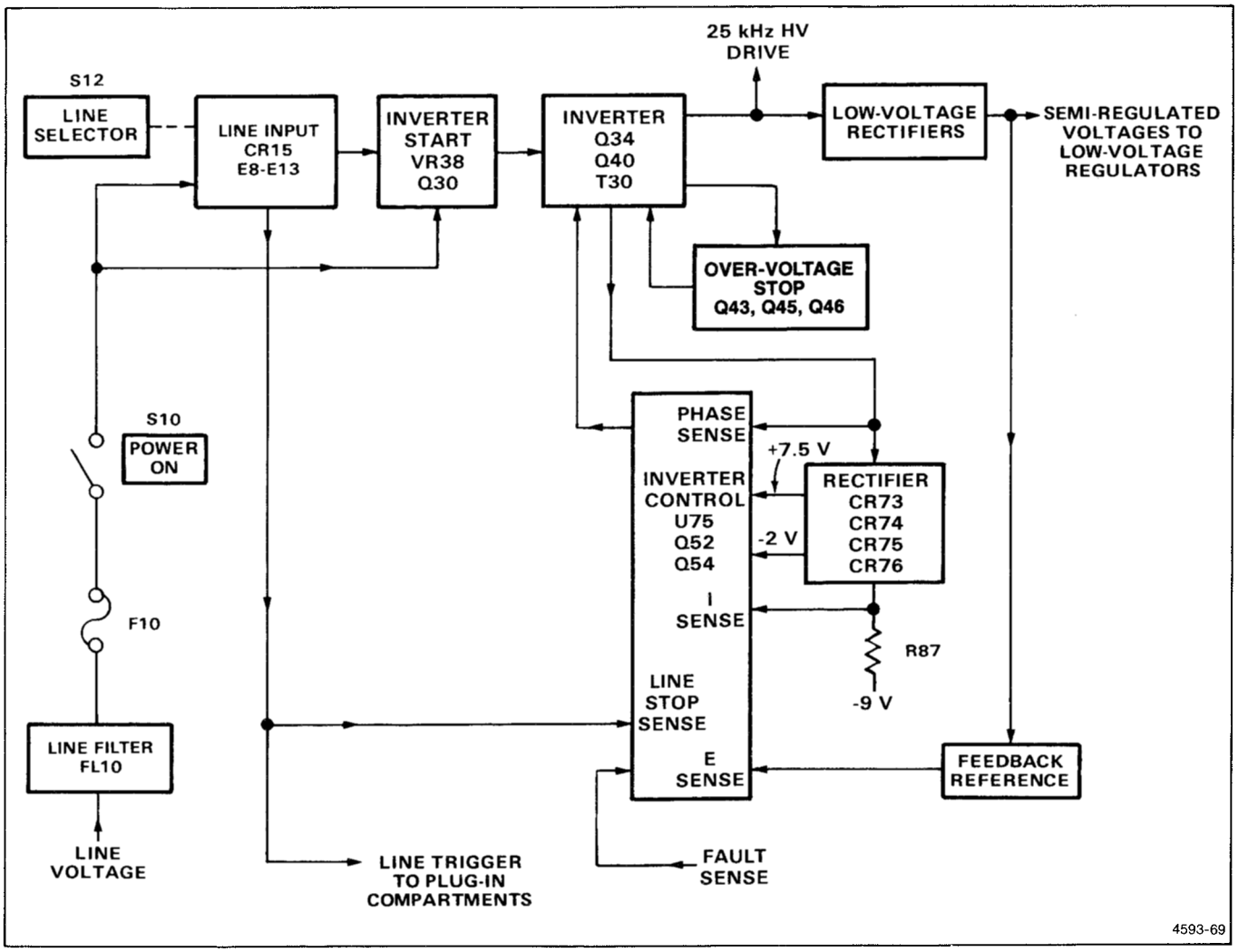

Figure 4-38. Detailed block diagram of the Converter/Rectifiers circuit.

LINE VOLTAGE SELECTOR switch, S12, allows the instrument to operate from either a 115-volt nominal or a 230-volt nominal line voltage source. In the 115-volt position, rectifier CR15 operates as a full-wave doubler with energy-storage capacitors C16 and C17, so the voltage across the two capacitors in series is the approximate peak-to-peak value of the line voltage. For 230-volt operation, CR15 is connected as a bridge rectifier, and the voltage across C16 and C17 is the approximate peak value of the line voltage. Thus, the dc voltage applied to the Inverter stage is about the same for either 115-volt or 230-volt operation.

Thermistors RT9 and RT13 limit surge current when the power supply is first turned on. After the instrument is in operation, the resistance of the thermistors decreases so that they have little effect on the circuit. When the instrument is turned off, the Inverter Control stage turns off the Inverter, which prevents it from discharging C16 and C17. C16 and C17 discharge slowly through R21 to allow for thermistor thermal-recovery time. This ensures sufficient thermistor resistance to limit the turn-on surge current to a safe level. Since C16 and C17 discharge slowly, dangerous potentials exist within the power supply for several minutes after the POWER switch is turned OFF. The presence of voltage in the circuit is indicated by relaxation oscillator R19, C19, and DS19. Neon bulb DS19 blinks until the potential across C16 and C17 drops to about 80 volts.

Spark gap electrodes E8 and E13 are surge-voltage protectors. When the LINE VOLTAGE SELECTOR switch is in the 115-volt position, only E8 is connected across the line input. If a peak voltage greater than 230 volts is present on the line, E8 conducts and quickly opens line fuse F10 to interrupt the input power before the instrument can be damaged. In the 230-volt position, E8 and E13 are connected in series across the line input to provide protection for peak voltages greater than 460 volts.

http://manoman.sqhill.com

Transformer T8 provides a sample of the line voltage to the plug-in connectors for triggering at line frequencies. This line frequency signal is also connected to the Inverter Control stage to sense when line voltage is present.

Inverter Start

Components R10 and C42 provide a turn-on path between the input line and the negative side of line-input filter capacitor C17. Capacitor C42 charges on each cycle of the input line voltage. When the charge on C42 reaches about 33 volts, Zener diode VR38 turns on, which causes programmable unijunction transistor Q30 to fire. This provides base drive to turn on Q40 through C39. When Q40 turns on, it shock-excites series-resonant network L37 and C37 to generate a damped oscillation. This damped oscillation provides the drive necessary to start the Inverter switching action. After the Inverter is operating, the recurrent waveform at the collector of Q40 keeps C42 discharged through CR49, thus disabling the Inverter Start network while the instrument is on.

Inverter

The Inverter stage converts the dc voltage across C16 and C17 to a sine-wave current to drive power transformer T110. Once the Inverter has been started by the Inverter Start network, transformer T30 provides feedback to the bases of Q34 and Q40 to sustain oscillation. These transistors operate at a forced beta of four due to the turns ratio of T30. Also, T30 provides a 60:1 turn ratio center-tapped winding for pre-regulation and fault protection shut-down. The Inverter Control stage short circuits one-half of this winding to either delay the turn-on of Q34 and Q40 or to completely stop their switching action.

The switching action of Q34 and Q40 generates a square-wave voltage with an amplitude approximately equal to the dc voltage at the input to this stage. The square-wave voltage at the emitter of Q34 supplies the drive necessary to maintain a sine-wave current in the series-resonant network of L37 and C37. Diodes CR34 and CR41 provide paths for series-resonant current when Q34 and Q40 are held off for pre-regulation.

To aid in understanding circuit operation, Figure 4-39A shows a representation of the Inverter stage as a switch. The three possible states of the Inverter are depicted by the three possible switch positions: Q34 is on in position A; Q40 is on in position C; or both transistors are held off for pre-regulation in position B. In the composite current waveform of Figure 4-39B, the relative phase and amplitude of each component of I_T is shown for periods T_a, T_b, and T_c corresponding to the three switch positions. Figure 4-39C and Figure 4-39D show the relationship of the Inverter voltage and primary winding voltages with respect to the current waveform.

The normal sequence of operation is as follows: Assume that the voltage at point X is some voltage more positive than the negative supply voltage and that Q40 has just turned on. The current labeled I_4 in Figures 4-39A and 4-39B flows as the voltage at point W goes negative. Point X goes toward the negative supply voltage as C37 charges through L37. The voltage across the primaries of T110 and T35 at point Y produces a voltage at the secondary of T35 that is sensed by Inverter Control U75 (see Fig. 4-39D). When this voltage changes phase from negative to positive, Q40 is held off (turned off) by U75. Due to the inductive action of L37, current continues to flow through the Inverter circuit, pulling the voltage at point W below the negative supply voltage. This forward biases CR41, which now conducts current I_1 (Figures 4-39A and 4-39B).

After a predetermined time, U75 allows Q34 to turn on and conduct the current labeled I_2 in Figures 4-39A and 4-39B. Since Q34 is now conducting, the voltage at point X charges toward the positive supply voltage through L37. Once again, voltage phase change is sensed at the secondary of T35 by U75 as previously described. Transistor Q34 is held off at this time, and current I_3 flows due to the inductive action of L37 pulling the anode of CR34 to a voltage greater than the positive supply voltage. After a time determined by the Inverter Control stage, Q40 conducts the current labeled I_4, and the cycle repeats.

Over-Voltage Stop

Whenever the voltage across the primary of T110 exceeds a safe level, the Over-Voltage Stop stage shuts down the Inverter to protect Inverter components from damage. For example, this stage activates whenever the normal voltage regulating path through Q52 and T30 is inoperative.

Capacitor C43 charges through R44 and CR38 to the peak voltage across the primary of T110. If this voltage exceeds a safe level, Q45 conducts to cause Q43 and Q46 to turn on. When Q46 turns on, the base-drive winding of T30 is short-circuited, which stops the Inverter switching action. Since Q43 is turned on, C42 (in the Inverter Start network) is prevented from charging and from firing Q30, thus preventing the Inverter from starting. Transistors Q43 and Q45 continue to conduct until C43 discharges sufficiently, through R45, to turn Q45 off. At this point, Q43 and Q46 turn off and the Inverter starts on the next positive half cycle of the line.

Inverter Control

The Inverter Control stage, made up primarily of U75, provides pre-regulation and fault protection functions. For pre-regulation purposes, U75 varies the hold-off time (T_b, in Fig. 4-39B) of the Inverter switching transistors.

http://manoman.sqhill.com

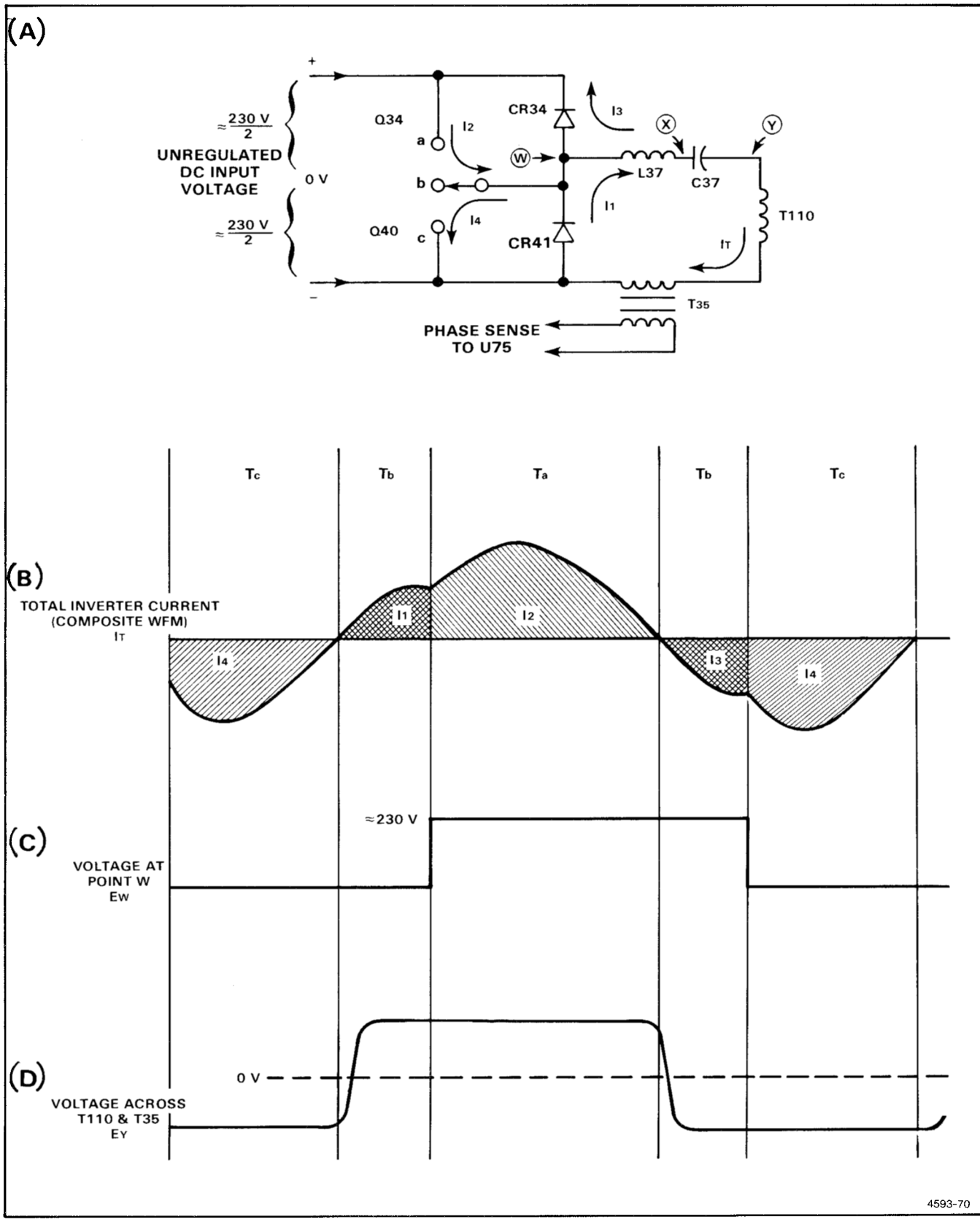

Figure 4-39. (A) Representation of Inverter stage. Idealized waveforms of (B) total Inverter current, I_T, (C) Voltage across CR41, and (D) Voltage across primaries of T110 and T35.

http://manoman.sqhill.com

Under normal operating conditions, only the voltage sense (E Sense) input at pin 15 controls the hold-off time. However, various fault conditions can affect hold-off time or stop the Inverter operation altogether. The operation of individual functions of the Inverter Control stage is described in the following discussion.

Pre-Regulator. The pre-regulator operation of U75, maintains constant voltage at the outputs of the Low-Voltage Rectifiers stage. It also provides constant peak-to-peak voltage to the Z-Axis and CRT circuit (diagram 14).

Transformer T35 provides Inverter phase information and power to U75. The phase information is connected to pins 10 and 11 through C77 and C78. Bridge rectifier CR73, CR74, CR75, and CR76 provides positive and negative operating voltages to U75. A shunt regulator in U75 maintains the +7.5 volts at pin 6. The −2 volt (nominal) supply connected to pin 7 is unregulated. Zener diode VR72 provides protection against open circuit conduction (U75 removed) and is normally not conducting.

Pin 15 is the voltage sensing (E Sense) point of the pre-regulator circuit. Zero volts at pin 15 indicates proper regulation. Zener diode VR88 provides a stable reference voltage for sensing-divider resistors R86, R87, R93, and R95. Variable resistor R93, in this divider, adjusts the ratio of the divider to adjust the output of the +108 volt supply. Outputs of the other supplies are then set by the turns ratio of T110.

Integrated circuit U75 regulates the Inverter by varying the hold-off time of switching transistors Q34 and Q40. A variable pulse-width monostable multivibrator in U75 is triggered at pins 10 and 11 whenever the Inverter current changes direction. The pulse width holds off the Inverter by turning on transistor Q52 through pin 9 of U75, thus shorting out the base drive to Q34 and Q40. The pulse width, and therefore holdoff, is controlled by a ramp at pin 12. If the voltage at the E Sense input, pin 15, is too low, the ramp is not allowed to rise very high and the pulse width and holdoff are short. As the E Sense voltage rises, the ramp is allowed to rise to a higher voltage level, increasing the holdoff time.

Fault Protection. The fault protection portions of U75 provide protection for the power supply components due to short circuits, turn-on surge currents, and other malfunctions. When a fault is detected at the Fault Sense input (pin 2) or I Sense input (pin 13), C64 begins to charge by a current from the Fault Holdoff Time output (pin 1). If the detected fault lasts longer than about 10 milliseconds, C64 charges positive enough to initiate a positive output at pin 8. This output turns on Q54 and Q52 which turns off the Inverter. The Inverter remains off while C54 discharges through R54, keeping Q54 and Q52 turned on. The Inverter restarts in roughly 500 milliseconds when the current through R54 is insufficient to keep Q54 and Q52 turned on. When the inverter restarts, C54 recharges through CR59 and R59. This cycle repeats until the fault is corrected, with the Inverter on for about 10 milliseconds and off for about 500 milliseconds.

Inverter Current Limiter. The inverter current limiter protects the Inverter components from damage due to excessive current turn-on or short circuits. Operation of this stage is similar to the pre-regulator (voltage regulation). The inverter current limiter takes control of the Inverter hold-off time whenever pin 13 starts to go negative. Transformer T35 provides a current step-down. The current is rectified and flows through current-sensing resistor R84. The voltage across R84 is negative and proportional to the Inverter current. The I Sense input at pin 13 of U75 is normally held positive through divider R81, R83, and R84. The inverter current limiter takes control of regulation when pin 13 reaches near zero volts. Peak Inverter current is limited to about 5 amps. If the voltage at pin 13 remains near zero for more than about 10 milliseconds, pin 8 goes positive to turn off the Inverter.

Fault Sense. The fault sense portion of U75 provides overload protection for supplies on the Low Voltage Regulators schematic (diagram 13) and other supplies generated throughout the instrument. Resistive networks from supplies are connected to the Fault Sense input at pin 2 of U75. During normal operation, the voltage at the Fault Sense input remains near zero. If one of the inputs changes sufficiently to cause this voltage level to vary 200 millivolts (positive or negative) for more than 10 milliseconds, a positive output at pin 8 of U75 stops the Inverter.

Line Stop. The line stop portion of U75 stops the Inverter when the front-panel POWER switch is turned OFF. The line stop stage also stops the Inverter if the ac line voltage falls below a minimum value.

The line-frequency signal from transformer T8 is connected to pin 4, the Line Stop Sense input of U75. During normal operation, the line-frequency signal causes the line stop timer at pin 3 to periodically discharge to ground. When the line-frequency signal is interrupted or falls below a minimum value, C67 charges to approximately +0.7 volts causing the line stop stage to produce a positive output at pin 8 of U75 which stops the Inverter.

Low-Voltage Rectifiers

The Low-Voltage Rectifiers stage rectifies the square-wave ac voltages at the output windings of T110 to the dc levels used for all regulated supplies in this instrument.

http://manoman.sqhill.com

LOW-VOLTAGE REGULATOR
Diagram 13

The Low-Voltage Regulator converts semi-regulated voltages from the Converter/Rectifiers circuit (diagram 12) to stabilized low-ripple output voltages. The regulators are series type, using the +50 volt supply as a reference. Figure 4-40 shows a detailed block diagram of the Low-Voltage Regulator circuit. A schematic of the Low-Voltage Regulator circuit is given on diagram 13 at the rear of this manual.

Operating Supplies

The operational amplifiers used to regulate the +50, +15, +5, −50, and −15 volt supplies require that four special voltages be generated for their operation:

(1) The +22 volt supply is generated from the semi-regulated +54 volt supply by reference Zener diode VR32 and emitter follower Q34.

(2) The −2 volt supply is generated from the semi-regulated −54 volt supply by reference Zener diode VR36 and emitter follower Q38.

(3) The +5.6 volt supply is generated from the semi-regulated +17 volt supply by Zener diode VR152.

(4) The −5.6 volt supply is generated from the semi-regulated −17 volt supply by Zener diode VR156.

+50 V Regulator

Semi-regulated +54 volts from the Converter/Rectifiers circuit (diagram 12) provides the unregulated voltage source for this supply. Differential amplifier U15 compares the feedback voltage at pin 2 against the reference voltage at pin 3. The error output at pin 6 of U15 reflects a difference between these two inputs. Zener diode VR12 sets a reference level of about +9 volts at pin 3 of U15. A sample of the output voltage from the +50 volt supply is connected to pin 2 of U15 through divider network R14, R15, and R16. Variable resistor R15 in this divider sets the output level of this supply. Notice that the feedback voltage of this divider is obtained from a line labeled +50 VS (sense). If the feedback voltages were obtained at the output of this supply, the voltage at the load would not stay constant due to the inherent resistance of the interconnecting cable between the supply and its load. The sense configuration overcomes this problem by sensing the voltage at the load. Since the current in the sense line is small and constant, the load voltage is held constant regardless of the load current.

Voltage regulation occurs as follows: If the output level of this supply decreases (becomes less positive) due to an increase in load or a decrease in input voltage (as a result of line-voltage change or ripple), the voltage across divider R14, R15, and R16 decreases also. This results in a less positive level at pin 2 of U15 than that established by Zener diode VR12 at pin 3 of U15. The current through CR15 and VR17 decreases causing an increase in current through the base-emitter junction of Q28. This results in increased conduction of Q28, the +50 volt series regulator. The load current increases, therefore the voltage across the load also increases (becomes more positive) sufficiently to balance the input into differential amplifier U15. The +50 V ADJ, R15, sets the output level of this supply.

Current limiting is provided for the +50 volt supply if excessive current is demanded from the supply. All current from the +50 volt supply must flow through R28. Under normal operation, there is insufficient voltage drop across R28 to turn Q22 off. However, when excessive current is demanded from +50 volt series regulator Q28 due to a short circuit or similar malfunction at the output of this supply, the voltage drop across R28 increases and begins to turn off Q22. The reduced collector current of Q22 results in a reduction of current through Q28. This current limiting protects Q28 from damage due to excessive power dissipation.

Several protection diodes are also included in this circuit. Diode CR28 prevents the output of this supply from going more negative than about −0.6 volt if it is shorted to a negative supply. Zener diode VR10 and diode CR10 supply a turn-on voltage for U15 to start the +50 volt supply when the instrument is first turned on. As soon as the +50 volt supply turns on, CR10 stops conducting.

−15 V Regulator

Basic operation of all stages in the −15 V Regulator is the same as for the +50 V Regulator. The reference level for this supply is established to ground through R82 at pin 5 of U84B. The divider ratio of R80 and R81 sets a level of zero volts at pin 6 of U84B. The level on the +50 VS (sense) line is held stable by the +50 volt supply. Any change at the output of the −15 volt supply appears at pin 6 of U84B as an error signal. The output voltage is regulated in the same manner as described for the +50 volt supply. Diode CR96 keeps the output of this supply from going more positive than about +0.6 volt if it is shorted to one of the more positive supplies. Operational amplifier U84A provides current limiting for Q94 by monitoring the voltage drop across R95. When too much current is demanded from the supply, the increased voltage drop across R95 allows U84A to turn Q88 off, reducing the current through Q94.

+5 V Regulator

Operation of the +5 V Regulator is basically the same as described for the previous supply regulators. Error voltage is provided through R131 to pin 2 of U114A, and pin 3 is referenced to the +50 VS (sense) line. The divider ratio of R113 and R114 is 10:1, so pin 3 of U114A is at +5 volts

http://manoman.sqhill.com

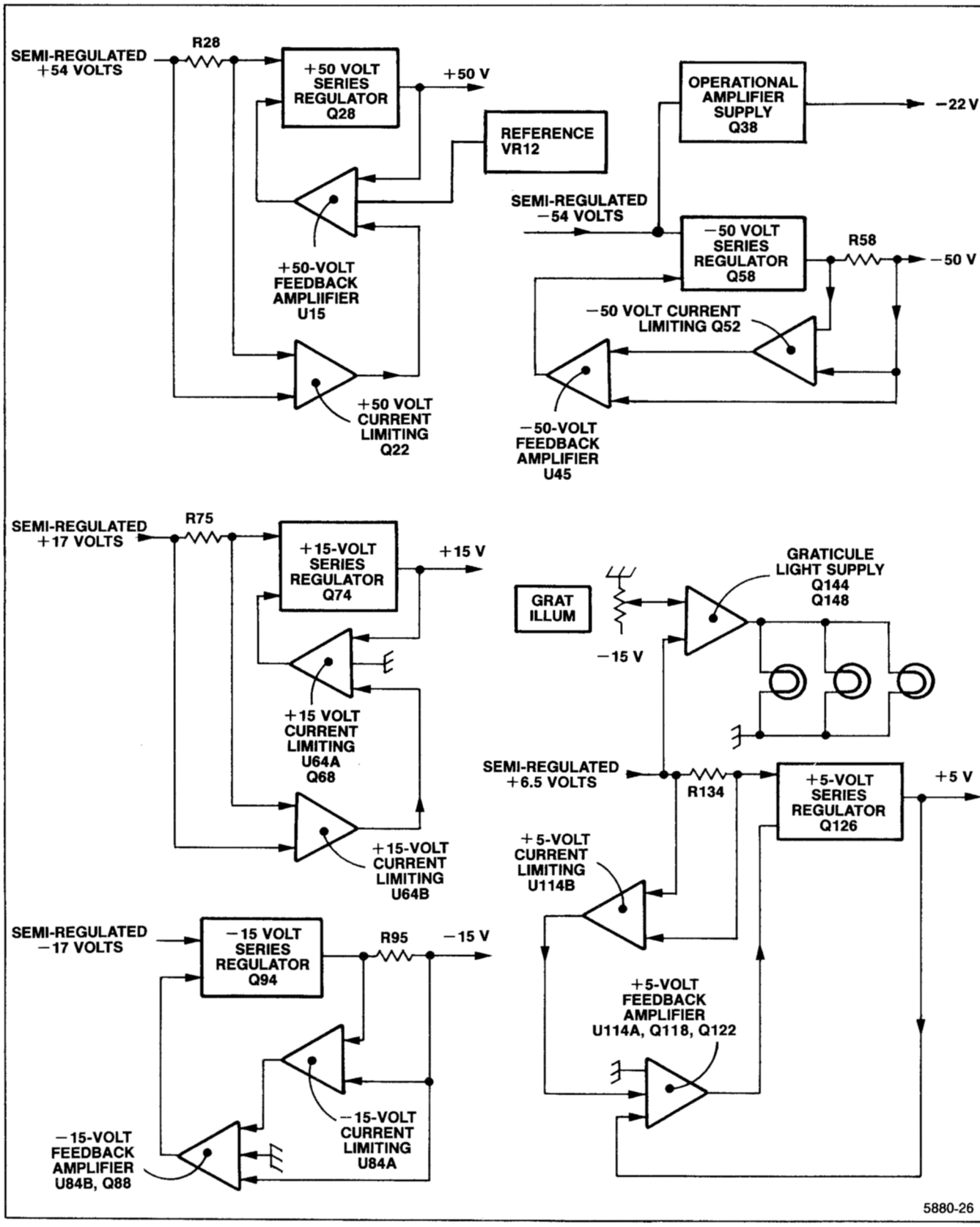

Figure 4-40. Detailed block diagram of the Low-Voltage Regulator circuit.

http://manoman.sqhill.com

when the supply is operating normally. The level on the +50 V Sense line is held stable by the +50 volt supply. Therefore, any change at the output of the +5 volt supply appears at pin 2 of U114A as an error signal. The output voltage is regulated in the manner described previously for the +50 volt supply. Diode CR132 limits the output of this supply to about −0.6 volt, if it is shorted to one of the negative supplies.

The +5 volt current limiting, accomplished by U114B, protects this supply from excessive output current damage. With normal supply current through R133 and R134, the voltage drop across this parallel resistance biases Q118 on. If the current through R133 and R134 increases above a safe level, pin 7 of U114B reduces the forward bias current to Q118. Now, the base current of Q122 is reduced which decreases the voltage on the base of Q126. This limits the conduction of Q126 to a safe current level.

+15 V Regulator

The +15 V Regulator regulates in the same manner as the +50 volt supply; current limiting operates in the manner described for the +5 volt supply. Error feedback voltage to pin 2 of U64A is provided through R69. Pin 3 of U64A is referenced to the +50 VS (sense) line. The divider ratio of R61 and R62 sets pin 3 of U64A at +15 volts. Any change in the output level of the +15 volt supply appears at pin 2 of U64A as an error signal. This results in an opposite change at the output, pin 1 of U64A, which is conveyed to the +15 volt series regulator transistor Q74, through CR64 and Q68, to correct the error in the output voltage of the supply. Diode CR76 limits the output of this supply to about −0.6 volt if it is shorted to one of the negative supplies.

−50 V Regulator

Operation of the −50 V Regulator is basically the same as described for the +50 volt supply; current limiting operates in a similar manner, as described for the +50 volt supply. Error voltage to pin 2 of U45 is provided by divider R45-R46 and is referenced to the −50 VS (sense) line. The divider ratio of R45 and R46 sets the level at pin 2 of U45 at zero volts when the output of this supply is correct. Protection diode CR58 limits the output voltage of this supply to +0.6 volt should the supply be shorted to a positive supply.

Graticule Light Supply

The Graticule Light Supply provides power for the graticule lights. The front-panel GRAT ILLUM control determines the output of this supply to set the brightness of the graticule lights. Transistors Q144, Q148, and diode CR148 form a voltage-following current buffer. The output voltage at the collector of Q148 follows the voltage set at the base of Q144 by the divider made up of R141, R142, R143, and the front-panel GRAT ILLUM control on diagram 2. Resistor R148 limits the output current from this supply to protect Q148 from damage due to a short circuit.

Z AXIS AND CRT
Diagram 14

The CRT Circuit provides the high voltage and control circuits necessary for operation of the crt (cathode-ray tube). This circuit also includes the Z-Axis Amplifier. Figure 4-41 shows a detailed block diagram of the CRT Circuit. A schematic of this circuit is shown on diagram 14 at the rear of this manual.

High-Voltage Power Transformer

High-Voltage Power Transformer T2010 provides pre-regulated voltages for the high-voltage supplies, and 6.3 volts ac for the crt heater. The crt heater is elevated to the cathode potential through R2074. The high-voltage winding of T2010 provides a two-kilovolt peak square-wave voltage to the Anode Voltage Multiplier and CRT Cathode Supply. A 600-volt winding supplies ac to the Control-Grid DC Restorer stage and is also rectified to supply +600 volts dc. Taps on this winding provide +130 volts, through CR2118 and CR2119 in full-wave configuration, and current sensing through resistor R2121.

Anode Voltage Multiplier

Positive accelerating potential for the crt anode is supplied by the four-times voltage multiplier contained within U2012. The voltage applied to the input of U2012 from the high-voltage secondary of T2010 is about two kilovolts peak. This results in an output voltage of about +8 kilovolts at the crt anode. The internal resistance of this supply is about 15 megohms and subject to meter loading when measured.

CRT Cathode Supply

In the full scan mode (front-panel REDUCED SCAN pushbutton out) the crt cathode supply voltage is about −2 kilovolts; in the reduced scan mode, about −4 kilovolts. The negative potential for the crt cathode is generated by half-wave rectifier CR2012 for the full scan mode and modified to a doubler in the reduced scan mode by activating K2014 which connects CR2014 into the circuit. Diode CR2023 provides the return path for the rectified current in the full scan mode; the reduced scan mode and the X4 multiplier require an ac return path which is provided by C2021, CR2021, CR2022, and VR2021.

A tetrode voltage, which is maintained at about +2 kilovolts above cathode potential in either full or reduced scan, is also obtained from the high-voltage secondary. Filtering

http://manoman.sqhill.com

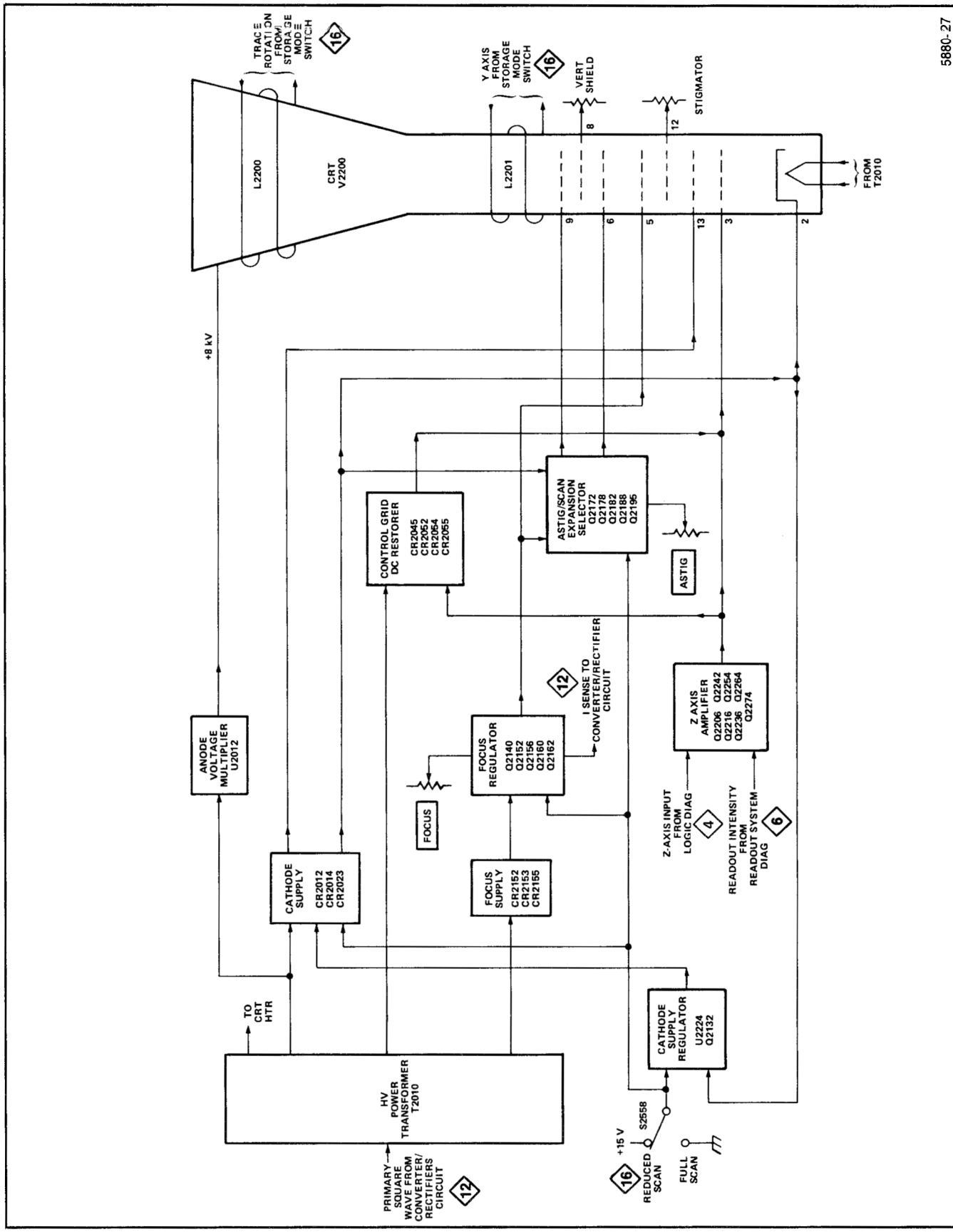

Figure 4-41. Detailed block diagram of the Z-Axis and CRT Circuit.

http://manoman.sqhill.com

for this voltage is accomplished by R2016 and C2014. Resistor R2015 limits current under fault conditions. Diode CR2016 clamps the tetrode voltage a few volts above ground if shorted to a positive supply. Components C2016 and R2017 are an isolation filter.

Cathode-Supply Regulator

The Cathode-Supply Regulator maintains the potential on the crt cathode and actively reduces the ac ripple through C2034. A sample of the output from the CRT Cathode Supply is connected to amplifier U2224 through resistor divider network R2218. High-frequency changes from the CRT Cathode Supply are coupled through C2282 and R2282.

The output of U2224 drives Q2132. The collector of Q2132 is in the dc current return path of the Cathode Supply. Any change in collector voltage directly changes the cathode voltage. Diodes VR2133 and CR2133 prevent the voltage on the collector of Q2132 from exceeding safe levels.

The −1955 V Adjust (full scan cathode voltage) adjustment R2285 sets the crt cathode voltage to −1955 volts in Full Scan mode. The Reduced Scan Horiz Gain adjustment R2220 sets crt horizontal sensitivity by setting the crt cathode voltage when in Reduced Scan mode.

Z-Axis Amplifier

The Z-Axis Amplifier controls crt intensity by varying the grid drive. High speed changes are coupled through C2289. Slow changes and dc levels are coupled through the Control Grid DC Restorer. The Logic circuit and the Readout System provide input signals to the Z-Axis Amplifier.

Transistors Q2206 and Q2216 are common-base amplifiers to establish a low input impedance for the Z-Axis Amplifier. Transistors Q2236, Q2242, Q2254, Q2264, and Q2274 form a current-to-voltage amplifier with feedback resistors R2233 and R2248. The Z-Axis Amplifier is compensated by R2235 and C2235 for optimum square corner on the Z-Axis signal.

Control Grid DC Restorer

The Control Grid DC Restorer couples dc and low frequency components of the Z-axis signal to the crt control grid, where difference in potential prohibits direct coupling. The dc restorer is actually a cathode-referenced bias supply for the crt control grid. Quiescently, its output voltage is more negative than the cathode by an amount set by the CRT Bias (grid) adjustment R2135.

The Control Grid DC Restorer is current driven from the +600 volt winding of T2010 through C2041-R2041-R2042. This approximate 25-kilohertz drive signal is connected to the junction of CR2045-CR2055-C2052. Diodes CR2045 and CR2055 limit the peak-to-peak amplitude of the drive to the difference between their forward-bias levels. The CRT Bias adjustment R2135 and the output level of the Z-Axis Amplifier set the forward bias levels of CR2045 and CR2055 respectively. Capacitor C2052 couples the limited-amplitude drive to the junction of CR2052-CR2054. During positive half cycles of the drive, CR2054 charges the control grid side of C2055 to a level equal to the peak-to-peak value of the drive signal. The resulting control-grid voltage is more negative than the cathode by an amount equal to the difference between the CRT Grid Bias adjustment setting and the Z-Axis Amplifier output level.

Focus Supply

The Focus Supply provides a regulated dc voltage to the crt focus and astigmatism elements. The supply voltage is produced by half-wave rectifier CR2155. In the Reduced Scan mode the contacts of K2155 close to connect CR2152 into the circuit to form a half-wave voltage doubler.

Regulation of the Focus Supply is accomplished by Q2156, Q2160, and Q2162. Normally the voltage at the base of Q2162 is +15 volts. Any error in this voltage changes the voltage at the collector of Q2156 to correct the Focus Supply voltage. Front-panel FOCUS control R1101A determines the quiescent operating voltage of the Focus Supply for a well-defined crt display.

In the Full Scan mode, feedback from the focus grid electrode is provided by two parallel resistor networks, R2166-R2167 and R2141-R2142. In the Reduced Scan mode Q2140 turns on, routing the current flowing through R2141 and R2142 through R2140 to ground. This action doubles the effective feedback resistance, increasing focus grid voltage. Reduced Scan Focus adjustment R2140 is operational only in the Reduced Scan mode. All of the load current for the Focus Supply flows through Q2156 and R2153. If the load current exceeds about 8 milliamps, the voltage across R2153 causes Q2152 to conduct. The additional current in the I Sense line causes the low-voltage supply to turn off, preventing component damage.

CRT Control Circuits

Front-panel ASTIG adjustment R2195 varies the potential on the astigmatism element of the crt. The range of adjustment of R2195 is determined by the current path through Q2188 and Q2182. In the reduced scan mode the current path is through Q2178 and Q2172, activating the Reduced Scan Astig adjustment for optimizing the Reduced Scan mode display.

http://manoman.sqhill.com

The Reduced Scan Vert Gain adjustment R2175 determines the vertical sensitivity of the crt when the crt is operated in the reduced scan mode.

The Stigmator adjustment, R2110, also affects the focus of the crt beam. The Vert Shield Comp adjustment, R2105, sets the voltage level on the vertical shield, which provides isolation for the vertical deflection plates.

Two coils control trace alignment by varying the magnetic field around the crt. Y-Axis alignment coil L2201 affects the crt beam after vertical deflection but before horizontal deflection. Therefore, only the vertical (Y) components of the display are affected. Trace Rotation coil L2200 affects both the vertical and horizontal rotation of the crt beam.

AUTO FOCUS AMPLIFIER
Diagram 15

The Auto Focus Amplifier provides control voltages to maintain optimum focus of the crt display with various settings of the front-panel A INTENSITY, B INTENSITY, and READOUT INTENSITY controls. Figure 4-42 shows a detailed block diagram of the Auto Focus Amplifier. A schematic of the Auto Focus Amplifier is given on diagram 15 at the rear of this manual.

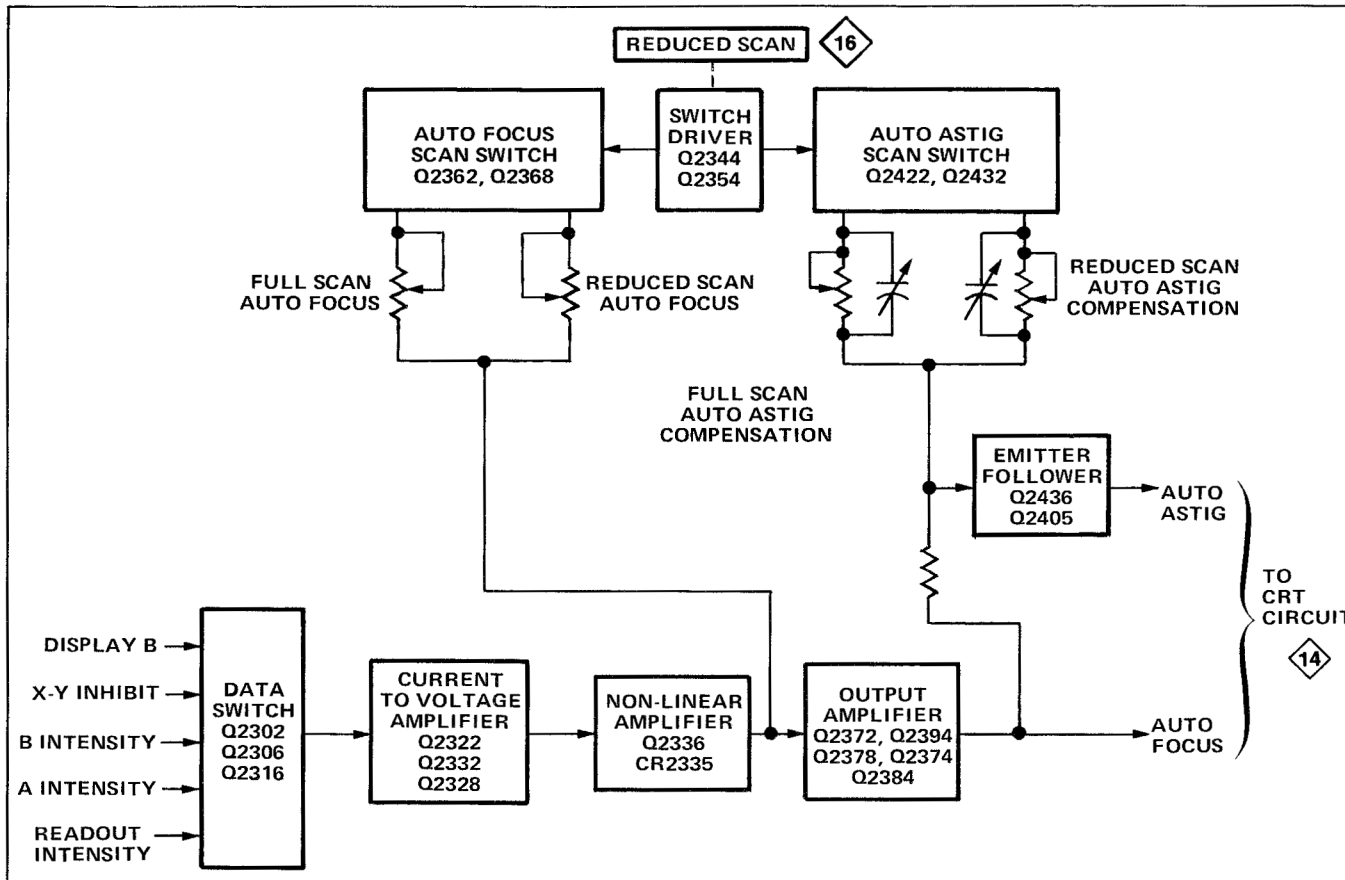

(B)

INPUT		OUTPUT
X-Y INHIBIT	DISPLAY B	DATA SWITCH OUTPUT CURRENT
LO	LO	A INTENSITY
LO	HI	B INTENSITY
HI	0	READOUT INTENSITY

Figure 4-42. (A) Detailed block diagram of the Auto Focus Amplifier circuit, (B) Logic table for intensity controls.

http://manoman.sqhill.com

Data Switch

The Data Switch consists of Q2302, Q2306, and Q2316. Output of the Data Switch is based upon A INTENSITY, B INTENSITY, or READOUT INTENSITY setting as determined by the Display B and X-Y Inhibit input signals. The Logic Table in Figure 4-42B shows the intensity controls that determine the output current of this stage for different combinations of Display B and X-Y Inhibit input levels.

Current to Voltage Amplifier

The Current to Voltage Amplifier stage, consisting of Q2322, Q2328, and Q2332, converts the current output from the Data Switch to a voltage in order to drive the Non-Linear Amplifier stage.

Non-Linear Amplifier

The Non-Linear Amplifier stage, consisting of Q2336 and CR2335, inverts the input signal in a nonlinear manner. When the input signal is too low to forward bias the emitter base junction of Q2336, no current flows and the collector of Q2336 is at its most positive level. As the signal becomes more positive, Q2336 conducts causing the collector voltage to decrease. When the voltage at the base of Q2336 becomes positive enough to cause CR2335 to conduct, this emitter degeneration is reduced which increases the gain of the stage.

Variable resistors R2365 and R2366 determine the gain of the Non-Linear Amplifier stage in the Full Scan and Reduced Scan modes. In the Full Scan mode collector current for Q2336 flows through Q2368 as determined by R2366. When Reduced Scan is selected, Q2336 collector current flows through Q2362 as set by R2365.

Output Amplifier

The signal from the Non-Linear Amplifier stage is applied to the Output Amplifier consisting of Q2372, Q2374, Q2378, Q2384, and Q2394. This stage provides final amplification for the auto focus signal which is then connected to pin 5 of the crt to automatically determine optimum focus of the display in all display modes.

Emitter Follower

The signal applied to pin 5 of the crt is also connected to Emitter Follower stage Q2406, Q2436. Variable resistors R2425 and R2435 determine the ratio of the divider in the reduced Scan and Full Scan modes. The output at the emitter of Q2436 is connected to pin 6 of the crt to automatically set optimum astigmatism of the display in all display modes.

STORAGE CONTROL AND TRACE ALIGN Diagram 16

STORAGE DISPLAY Diagram 17

The Storage Control and Storage Display circuits comprise the Storage System. The Storage Control circuit develops digital and analog signals for input to the Storage Display circuit. The Storage Control circuit includes front-panel switching and rear-panel connectors for control of the Storage System. The Storage Control also includes circuits to coordinate the operation of the Readout System and associated time-base unit(s) with storage functions. The Storage Display circuit decodes the signals that are generated by the Storage Control circuit and develops the waveforms that are applied to the crt storage electrodes.

Figure 4-43 shows a detailed block diagram of the Storage System. The schematic for the Storage Control and the Storage Display circuits are on diagrams 16 and 17 respectively at the rear of this manual. Figures 4-44, 4-45, 4-46, and 4-47 show the timing sequence of signals used throughout the Storage System in each of the four storage modes (BISTABLE, VAR PERSIST, FAST BISTABLE, and FAST VAR PERSIST).

The Trace Alignment circuit develops outputs to drive the Trace Rotation and Y-Axis coils. The schematic for this circuit is shown on diagram 16.

Storage Mode Switching

This stage, comprised of Q2642, Q2644, and S2404, provides dc control signals for the Storage System. Table 4-3 lists the logic levels of the control signals for the five positions of Storage Mode Switch S2404.

http://manoman.sqhill.com

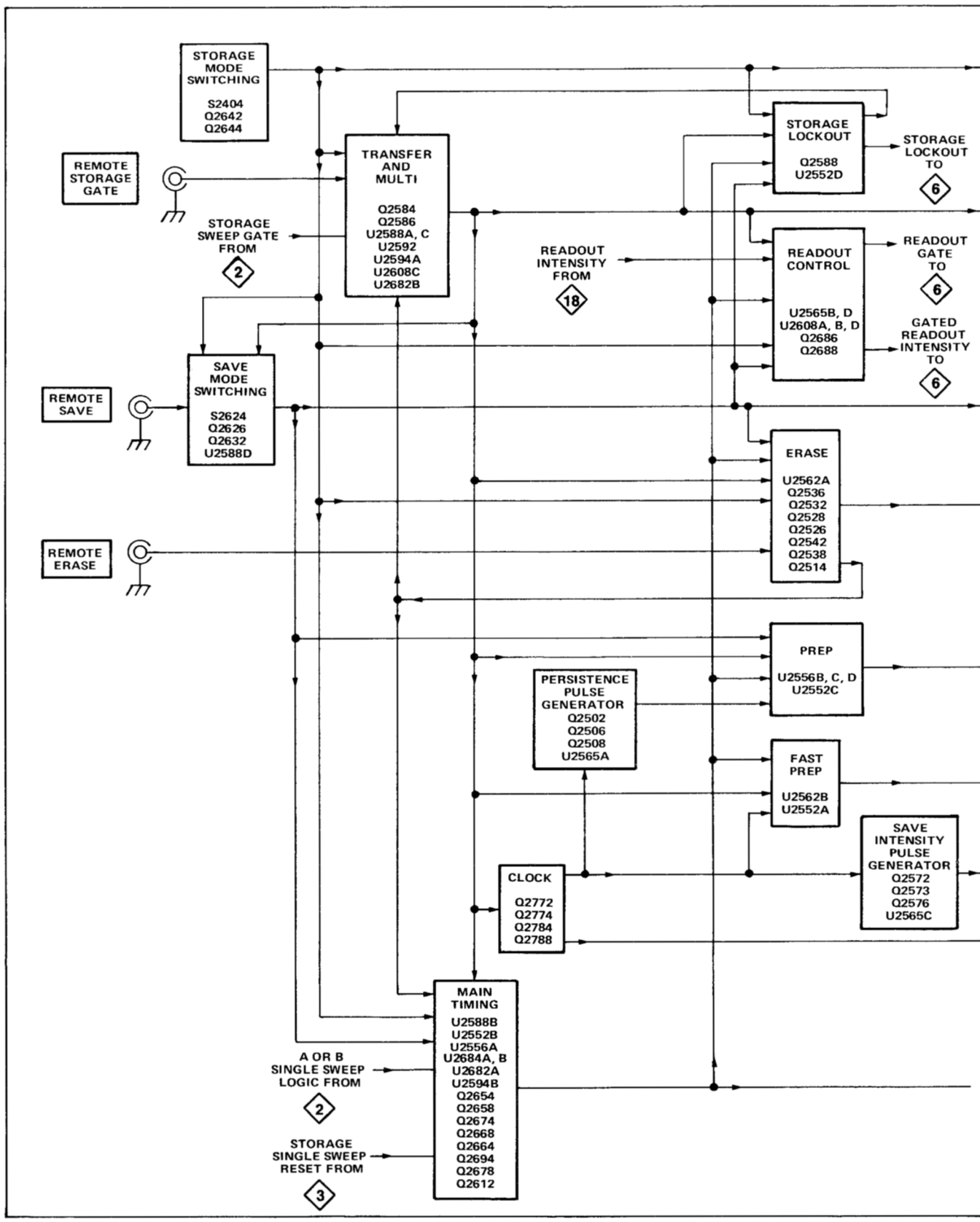

Figure 4-43. Detailed block diagram of the 7934 Storage System.

http://manoman.sqhill.com

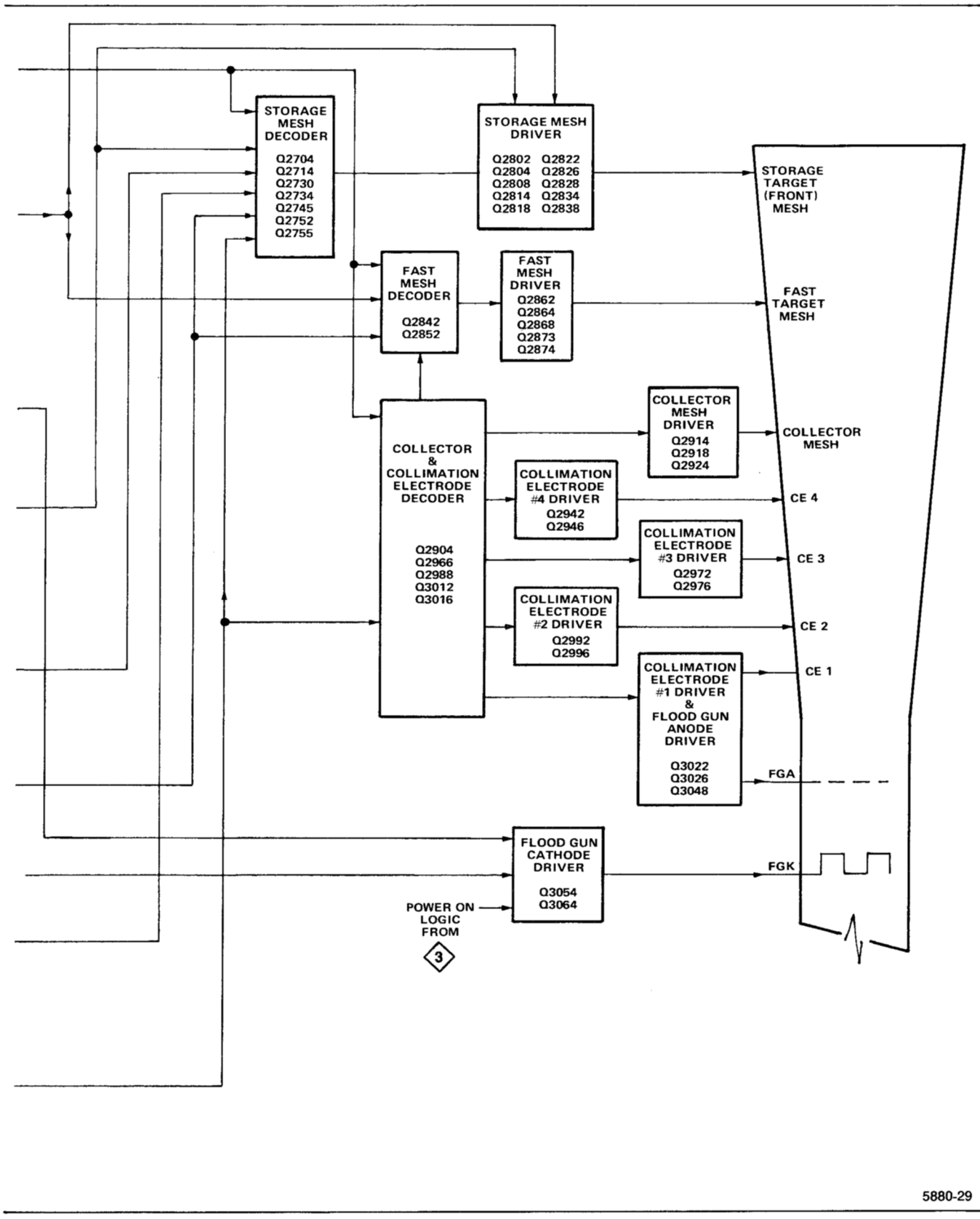

http://manoman.sqhill.com

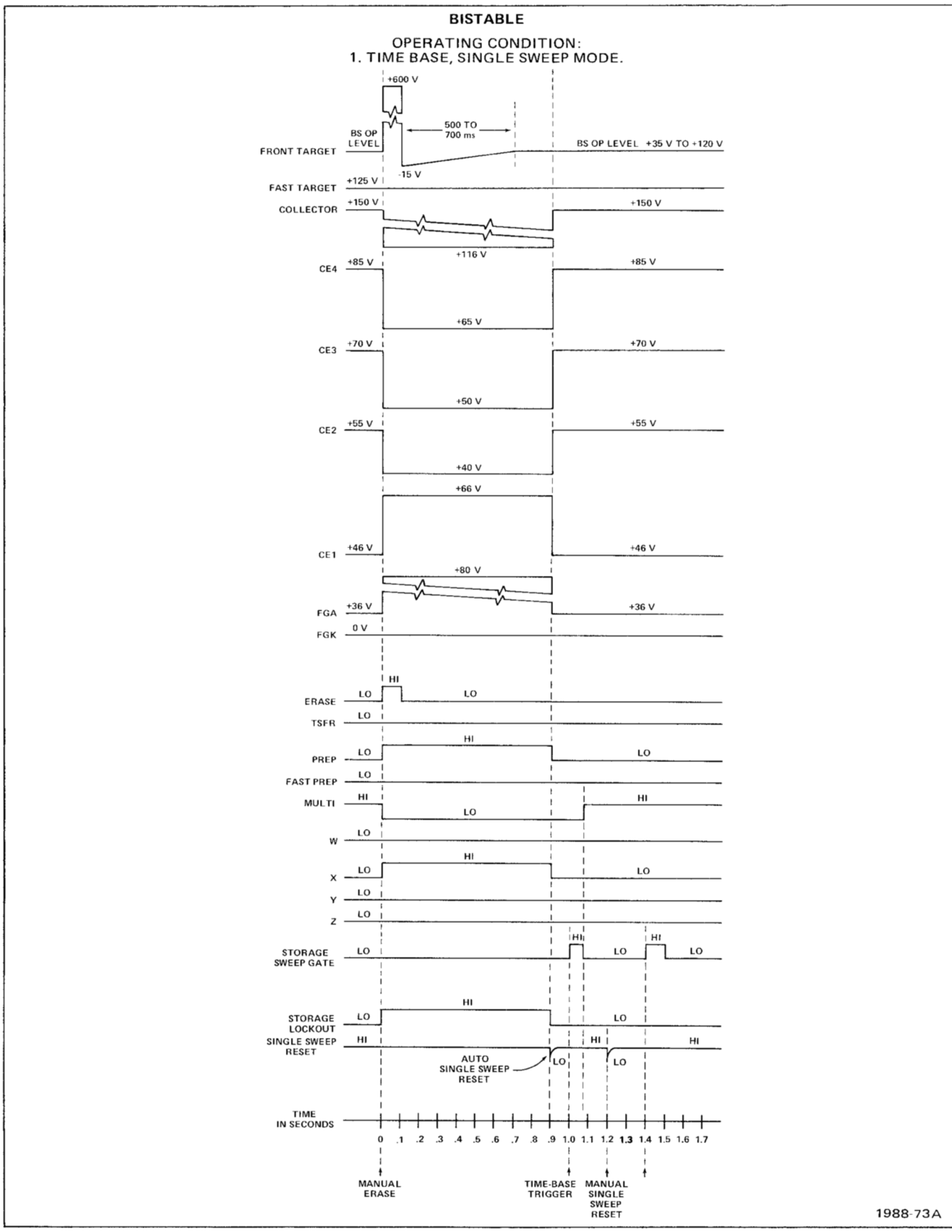

Figure 4-44. Bistable storage mode timing diagram.

http://manoman.sqhill.com

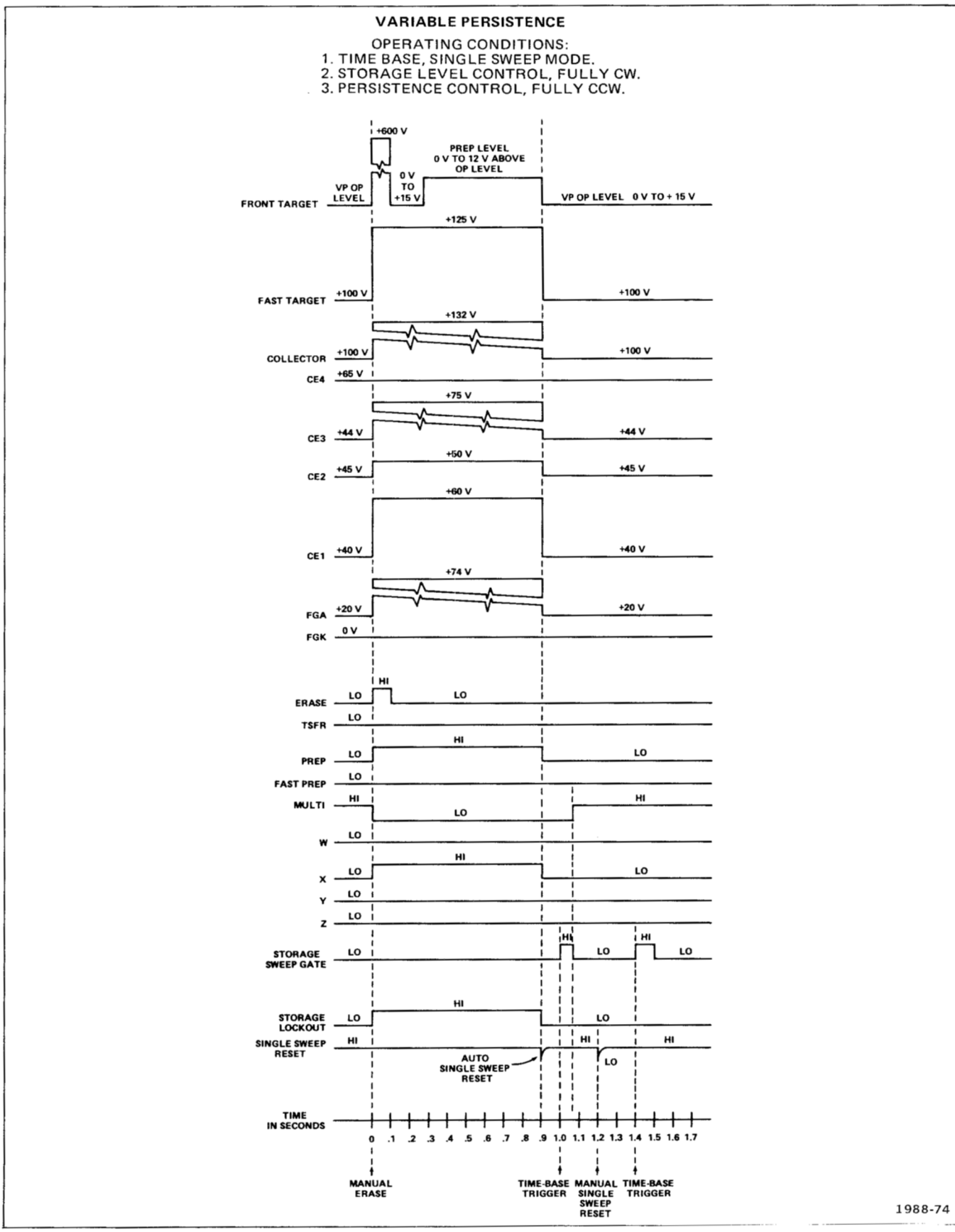

Figure 4-45. Variable persistence storage mode timing diagram.

http://manoman.sqhill.com

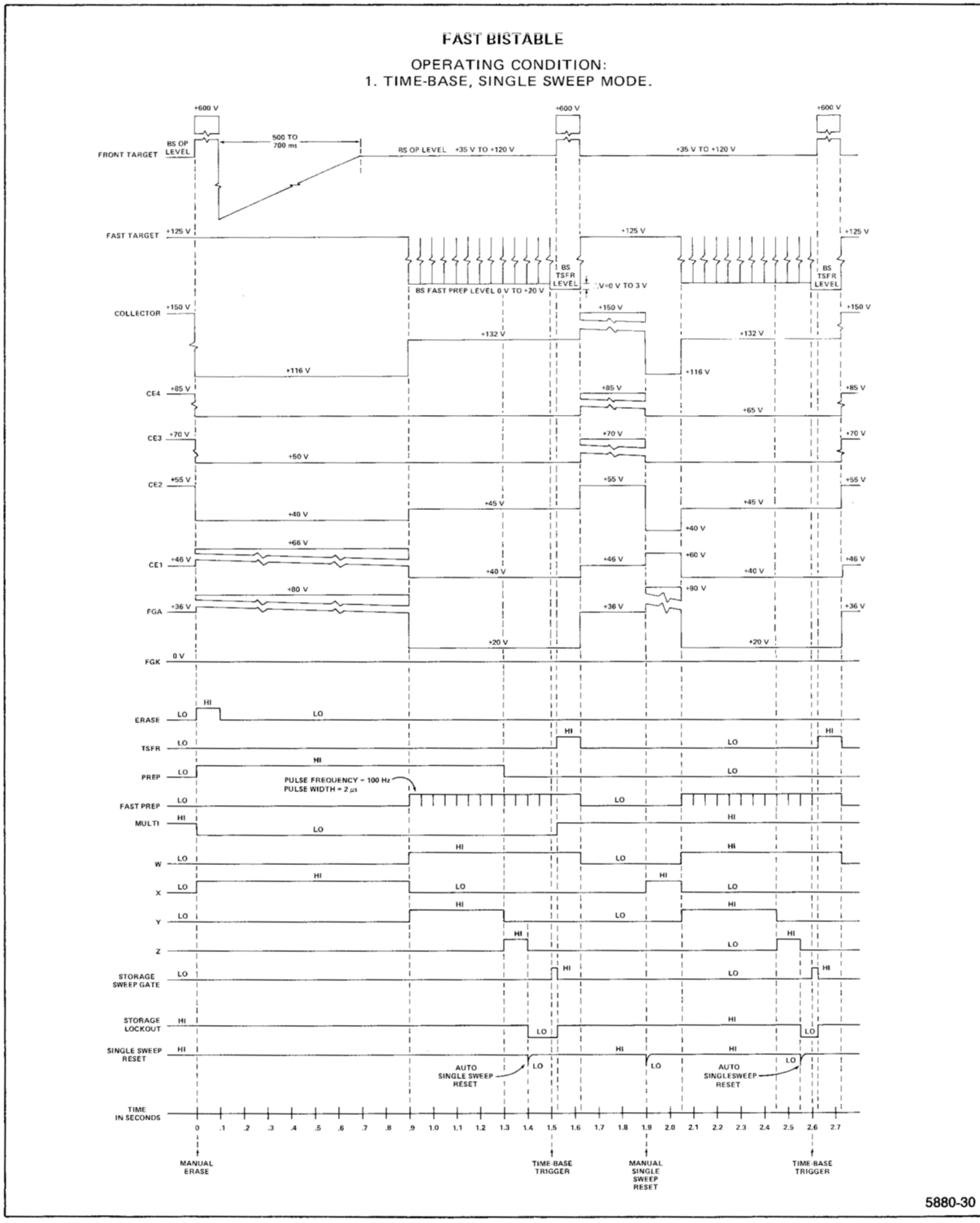

Figure 4-46. Fast bistable storage mode timing diagram.

http://manoman.sqhill.com

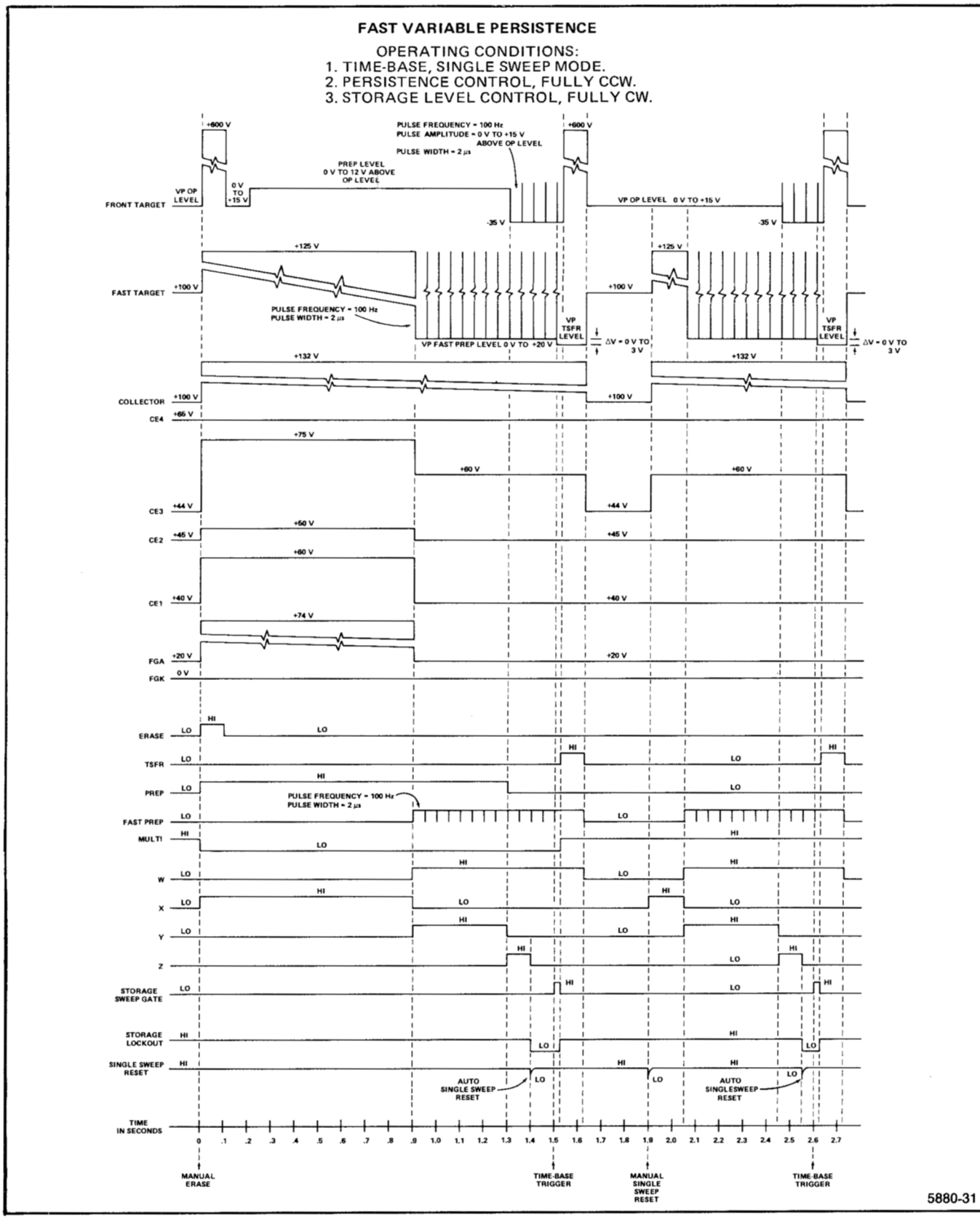

Figure 4-47. Fast variable persistence mode timing diagram.

http://manoman.sqhill.com

Table 4-3
STORAGE MODE SWITCH OUTPUT LOGIC LEVELS

Storage Display Mode	NS	$\overline{NS}$	$\overline{NS}$ (+15 V)*	VP (+15 V)*	$\overline{VP}$	FAST
STORE OFF	HI	LO	LO	LO	HI	HI
BISTABLE	LO	HI	HI	LO	HI	HI
VAR PERSIST	LO	HI	HI	HI	LO	HI
FAST BISTABLE	LO	HI	HI	LO	HI	LO
FAST VAR PERSIST	LO	HI	HI	HI	LO	LO

*** A HI logic level is +5 volts except for $\overline{NS}$ (+15 V) and VP (+15 V) which are +15 volts in the HI state.**

Erase

This stage develops the Erase and $\overline{Erase}$ pulses, which initiate the storage erase cycle. It consists of three sections: (1) monostable multivibrator, U2562A, (2) input logic for the stage, Q2514, Q2526, Q2528, and Q2542, (3) oscillator Q2532, Q2536, and Q2538.

Each time pin 2 of U2562A goes HI and pin 1 is LO, an Erase pulse is generated. However, if pin 1 of U2562A is HI (see Save Mode Switching) no Erase pulse can be generated by the signal on pin 2. The width of the Erase pulse, as determined by R2562 and C2562, is approximately 100 milliseconds.

When front-panel ERASE button S2538 is pressed, the $\overline{NS}$ (+15 V) logic level is connected to R2516. In all storage modes the $\overline{NS}$ (+15 V) signal is at +15 volts. Therefore, current from the +15 volt supply passes through C2521 to momentarily turn on Q2526. When Q2526 conducts, Q2542 turns off and a HI is applied to pin 2 of Q2562A to generate an Erase pulse. Likewise, a LO applied to the REMOTE ERASE INPUT causes an Erase pulse to be generated.

Whenever a storage mode is selected with Storage Mode Switch S2404, or the REDUCED SCAN button S2558 is pressed, the switching transition coupled through C2523 and Q2526 or C2528 and Q2528 initiate an Erase pulse.

Transistors Q2532, Q2536, and Q2538 comprise a variable frequency low-speed oscillator controlled by front-panel AUTO ERASE control R1401-S1401. The PUT (programmable unijunction transistor) Q2538 is connected as a relaxation oscillator with C2534 as the timing capacitor. Current to charge C2534 is provided by a variable-current source, Q2536, controlled by the AUTO ERASE viewtime control R1401. Each time Q2538 turns on to discharge C2534, a voltage spike is applied to R2540 which turns Q2542 off and triggers an Erase pulse.

When Q2532 is on, the operation of the oscillator is inhibited by holding C2534 discharged. When P2531 is set for Periodic operation, the X+Y logic signal (see Main Timing) turns Q2532 on for approximately 1.4 seconds after the start of each Erase pulse, and then allows C2534 to resume charging. When P2531 is set for After Sweep operation, the $\overline{Multi}$ signal (see Transfer and Multi) turns Q2532 on at the beginning of the Erase pulse and holds it on until the end of the next sweep. When AUTO ERASE switch S1401 is set to the OFF position, Q2532 is biased on to inhibit the Auto Erase function.

When the Save signal (see Save Mode Switching) connected to R2539 goes HI, the auto erase oscillator is inhibited. However, Q2538 is allowed to turn on immediately after the Save signal returns LO, providing C2534 is sufficiently charged.

Transfer and Multi

This stage develops the Tsfr and $\overline{Tsfr}$ pulses which initiate the transfer operation in the fast storage modes, the Multi and $\overline{Multi}$ signals which indicate whether a display has been stored since the last erase cycle occurred, and the $\overline{Swp+Tsfr}$ signal which indicates whether a waveform is being written or the transfer operation is occurring.

When the Storage Sweep Gate is HI, current flows into R2584 turning off Q2586 and causing a HI level to appear at its collector. Also, a HI level applied to the REMOTE STORAGE GATE INPUT turns off Q2586 to provide a HI level at its collector. U2588A inverts the HI and applies it to pin 8 of U2588C. If the Storage Lockout signal (see Storage Lockout) at pin 9 of U2588C is LO, the signal is inverted to provide a replica of the Storage Sweep Gate or the Remote Storage Gate signals at pin 10 of U2588C.

http://manoman.sqhill.com

The four gates of U2592, along with C2592, comprise a monostable multivibrator which generates a short positive pulse whenever the output of U2588C goes LO. This End-of-Sweep circuit operates as follows: Assume that the output of U2588C is LO and that the output of U2592D is HI. Then, the outputs of U2592A and U2592C will be LO. When the output of U2588C goes HI, the flip-flop comprised of U2592A and U2592D changes states. The output of U2592C, however, still remains LO. When the output of U2588C returns LO, the output of U2592C immediately goes HI since both of its inputs are now LO.

Both inputs of U2592B are also LO so its output switches to the HI state. Capacitor C2592 loads the output of U2592B to provide a delay of approximately 100 nanoseconds in the LO to HI transition. At the end of this delay the flip-flop, U2592A and U2592D, switches back to its initial state and the output of U2592C returns LO.

The 100 nanosecond End-of-Sweep pulse from U2592C provides a trigger to U2594A, to generate a 100-millisecond wide Tsfr pulse at the end of the sweep whenever the $\overline{\text{Fast}}$ signal is LO. This pulse also clocks U2682B so that the Multi signal goes HI at the end of the first sweep after an erase pulse occurs; the $\overline{\text{Erase}}$ pulse clears this flip-flop. The End-of-Sweep pulse is also coupled to U2608B in the Readout Control stage (see Readout Control). U2608C generates the $\overline{\text{Swp+Tsfr}}$ signal through a combination of inputs from U2588C and U2594A.

Save Mode Switching

The Save Mode switching stage, consisting of Q2626, Q2632, and U2588D, develops the Save signal which enters the Storage System into the Save mode of operation. Pressing the front-panel SAVE switch, S2624, or grounding the rear-panel REMOTE SAVE INPUT initiates the Save signal by turning off Q2626 which in turn saturates Q2632. However, if one of the storage modes is not selected, $\overline{\text{NS}}$ (+15 V) connected to the collector of Q2626 is at zero volts and Q2632 remains off to prevent the Save signal from occurring.

When Q2632 saturates to produce the Save signal, front-panel SAVE light DS2624 turns on and a LO is applied to pin 12 of U2588D. The Save output signal goes HI only if the $\overline{\text{Multi}}$ signal at pin 11 is LO. That is, the Save signal can only be produced if a sweep has occurred since the last Erase pulse. This action performs the Auto Save function.

Main Timing

This stage develops the W, X, Y, and Z signals, their complements, the X + Y signal, and the X-Multi signal. These signals control the major sequence of voltages applied to the crt during the Erase and Multi-Trace cycles. This stage also accepts input information from the time-base unit(s) via the A or B Single Sweep Logic line and the Storage Single Sweep Reset line, and generates the Storage Single Sweep Reset signal to reset the time-base unit(s) during any erase or Multi-Trace cycle.

The X signal, developed by U2684A, is a positive pulse with a duration between 150 milliseconds and 4 seconds. The X signal goes HI when Q2674 turns on pulling pin 1 of U2684A LO. This occurs under one of the following three conditions: (1) When an Erase pulse occurs, (2) in the Fast Storage modes when the MULTI TRACE DELAY control R1301 is in the detent position, or the time-base unit(s) is in the Single Sweep mode and a Multi-Trace cycle is externally initiated, and (3) in the Fast Storage modes when S1301 is out of the detent, the time-base unit(s) is in a repetitive sweep mode, and the Multi-Trace cycle automatically recurs.

The input path for condition number 1 above is through R2673 when Erase goes HI. The input path for condition number 2 is through CR2664, C2668, and Q2668 when the Storage Single Sweep Reset line is pulled LO (time base unit single sweep reset button is pushed, or the REMOTE RESET INPUT is grounded). Transistor Q2658 must be off so W (explained later) must be LO insuring that any previously initiated Erase or Multi-Trace cycle has been terminated. The input path for condition number 3 is through C2671 when $\overline{\text{Tsfr}}$ returns HI after the transfer operation. Transistor Q2654 must be off so the time-base unit(s) must be in a repetitive sweep mode and the MULTI TRACE DELAY control must be out of the detent.

The width of the X pulse is determined by Q2612, Q2678, and U2552B. When the X pulse is triggered by an Erase pulse, Multi (emitter of Q2612) is LO and $\overline{\text{Multi}}$ is HI. Diodes CR2610 and CR2615 are reverse-biased and charging current for timing capacitor C2676 passes through CR2614, R2613, and R2676. In this condition, the X pulse lasts approximately 900 milliseconds.

When the Multi-Trace cycle is externally initiated, Multi is HI and the output of U2552B is LO (A or B Single Sweep Logic line is HI or R1301 is in the detent position), so Q2612 is on. Diode CR2614 is reverse-biased so charging current for C2676 passes through Q2612, CR2610, and R2676. Under this condition, the X pulse duration is approximately 150 milliseconds. When the Multi-Trace cycle automatically recurs, the output of U2552B is LO. If Multi is HI, timing current passes through MULTI TRACE DELAY control R1301 and the pulse width is variable from approximately 150 milliseconds to 4 seconds. If MULTI is LO, timing is as in condition number 1. Transistor Q2678 is a current stage which insures adequate drive for pin 15 of U2684A under any of the above timing conditions. The connection at pin 3 of U2684A inhibits the X pulse when NS is LO. When Save or $\overline{\text{FAST}}$ are HI, the X pulse is inhibited through R2655 and R2657.

http://manoman.sqhill.com

At the end of the X pulse (if the A or B Single Sweep Logic line is HI) current from the rising edge of $\overline{X}$ is coupled through R2662 and C2663 to the base of Q2664 producing a negative reset pulse on the Storage Single Sweep Reset line.

The Y signal, generated by U2684B, is a positive pulse which occurs at the end of the X pulse. The Y pulse is triggered by $\overline{X}$ coupled through C2684 to pin 10 of U2684B. Transistor Q2694 inhibits the generation of the Y pulse whenever X, Save, or $\overline{\text{Fast}}$ are HI. R2685 and C2685 set the width of the Y pulse to approximately 400 milliseconds.

The W signal is generated by U2682A. W goes HI at the beginning of the Y pulse and is normally reset LO at the end of the Tsfr pulse by the coupling of $\overline{\text{Tsfr}}$ through C2683. However, if X, Save, or $\overline{\text{Fast}}$ go HI, Q2694 will also reset W LO.

The Z signal, generated by U2594B, is a positive pulse which occurs at the end of the Y pulse. R2696 and C2696 set the width of the Z pulse at approximately 100 milliseconds.

The X+Y signal is formed directly by U2556A, and the X-Multi signal is formed directly by U2588B.

Clock

This stage generates the Clock and 10-kilohertz Ramp signals for use by the rest of the storage system. Programmable unijunction transistor (PUT) Q2772, and components R2770, C2770, and R2779 form a relaxation oscillator operating at a frequency of approximately 100 hertz. Q2774, R2774, R2775, R2779, and C2774 form a similar oscillator operating at a frequency of approximately 10 kilohertz. Both oscillators share a common gate-biasing resistor, R2779, that provides synchronous oscillations. To illustrate, consider that C2770 is initially discharged and Q2772 is not conducting. The time constant of C2774 and R2774 is much shorter than the time constant of C2770 and R2770. Therefore, Q2774 oscillates at approximately 10 kilohertz while the anode voltage of Q2772 slowly rises. Each time Q2774 turns on, gate current is drawn from R2779 causing the gates of Q2772 and Q2774 to drop approximately 350 millivolts. Thus, the anode firing voltage for Q2772 is lower when Q2774 is on. This causes Q2772 to synchronize with Q2774.

When Q2772 is on, it draws sufficient gate current to temporarily stop the oscillation of Q2774 and turn Q2784 on for approximately 50 microseconds. This action generates the Clock pulses. Amplitude of the Clock pulses is approximately 10 volts with a −5 volt base line as set by Q2788, R2785, R2786, and R2787. The 10-kilohertz Ramp signal is taken directly from the anode of Q2774.

Persistence Pulse Generator

This stage, comprised of Q2502, Q2506, Q2508, and U2565A, generates a clock-frequency pulse train at the collector of Q2506 with the pulse width continuously variable by the PERSISTENCE control. These pulses control the persistence of the display in both of the variable persistence modes. Operation of the stage is as follows:

Transistors Q2502 and Q2506 are connected as a comparator. PERSISTENCE control R1201 determines the voltage level applied to the base of Q2502. When the Clock pulse goes HI, Q2508 switches on to discharge C2507 to about −5 volts. When the PERSISTENCE control is adjusted away from the MAX position, Q2502 turns on and Q2506 turns off. At the same time, the output of U2565A goes LO to hold the collector of Q2506 LO. When the Clock pulse returns LO, a positive pulse begins at the collector of Q2506. Current through R2507 begins to charge C2507, raising the base voltage of Q2506. When the base voltage of Q2506 exceeds that of Q2502, transistor Q2506 turns on and the collector of Q2506 again goes LO. When the PERSISTENCE control is set to the MIN position, the pulse width is approximately 1.8 milliseconds. If the PERSISTENCE control is set to MAX, Q2506 never turns off and no positive pulses are produced at the collector of Q2506.

Save Intensity Pulse Generator

This stage, comprised of Q2572, Q2576, Q2578, and U2565C generates a clock-frequency pulse train at the collector of Q2576 with pulse width continuously variable by SAVE INTENSITY control R1101. These pulses are applied directly to the Flood Gun Cathode Driver stage to adjust the display intensity in the Save mode. With the SAVE INTENSITY control set to MIN, pulses are not produced; with the SAVE INTENSITY control set to MAX, the pulse width is approximately 10 milliseconds. Operation of this stage is identical to the previously described Persistence Pulse Generator Stage.

Prep

This stage, comprised of U2552C, U2556B, U2556C, and U2556D, develops the Prep signal. This signal directs the Storage Mesh Logic Decoder to switch the Storage Mesh to the Prep Level when operating in the Variable Persistence storage modes (see Figures 4-49 and 4-51). The inputs to this stage are from the Persistence Pulse Generator, Save Mode Switching, Transfer and Multi, and Main Timing stages.

Fast Prep

This stage, comprised of U2562B and U2552A, generates the Fast Prep signal. The Fast Prep signal is used by the Storage Mesh Decoder and Fast Mesh Decoder stages

http://manoman.sqhill.com

in the transfer (FAST BISTABLE or FAST VAR PERSIST) modes. U2562B produces a clock-frequency pulse train; the width of the pulses (set by R2565 and C2565) is approximately 1.8 microseconds. When $\overline{W}$ is LO, these pulses are inverted by U2552A to form the Fast Prep signal. When $\overline{SWP+TSFR}$ is LO and $\overline{W}$ is LO, the Fast Prep signal remains HI. When $\overline{W}$ is HI, the Fast Prep signal stays LO.

Storage Lockout

This stage, comprised of Q2588, U2552D, CR2551, CR2552, CR2553, CR2554, and CR2555, develops the Storage Lockout signal when the storage system is unprepared to produce a stored display. The Storage Lockout signal inhibits the time-base unit(s), the Storage Sweep Gate, the Remote Storage Gate, and blanks the crt. The five diodes connected to the base of Q2588 form a five-input OR gate. A HI level applied to the anode of any one of these five diodes produces a HI Storage Lockout signal at the emitter of Q2588 (pins 11 and 12 of U2552D must both be LO for a HI to be applied to the anode of CR2553).

Readout Control Logic

This stage provides two signals to the Readout System: The Readout Gate and the Gated Readout Intensity. The Readout Gate signal is generated by U2608A, U2608B, U2608D, U2565B, U2565D, and S1303. When S1303 is set to the variable position, the Readout Gate is HI which allows the Readout System to operate continuously in a free-running manner. When S1303 is set to the PULSED position, the state of the Readout Gate depends upon the End-of-Sweep pulse from U2592C (see Transfer and Multi stage) and the setting of the Storage Mode Switch. In the STORE OFF or the VAR PERSIST mode, the Readout Gate duplicates the End-of-Sweep pulses causing the Readout System to produce one complete frame (eight words) at the end of each sweep. In the FAST VAR PERSIST mode a Readout Gate is also produced at the end of each sweep. However, the Gated Readout Intensity (explained below) inhibits the Readout System so it will not write on the Fast Mesh. Instead, R2608 and C2608 differentiate the $\overline{W}$ signal and couple the rising edge into the Readout Gate circuit to initiate one complete frame of readout at the end of each transfer operation.

In BISTABLE and FAST BISTABLE modes the writing speed of the Storage Target is too low to store a single frame of readout. For this reason, the Readout System free runs at the end of a sweep until the next Erase pulse occurs. The Readout Gate goes LO at the initiation of the Erase pulse since $\overline{Multi}$ is HI and applied to pin 2 of U2608A. The $\overline{MULTI}$ signal goes LO at the first End-of-Sweep pulse, causing the Readout Gate signal to go HI.

The Gated Readout Intensity is an analog current signal which controls the crt intensity during the readout display. At zero current it also inhibits the Readout System. When Q2688 is on, the Readout Intensity control adjusts this current to control the brightness of the readout display. When Q2688 is off, the current is zero, turning off the readout. Transistor Q2688 is off during the Erase and Multi Trace cycles (X or W HI) and in the fast storage modes up to the end of the transfer operation (W HI). Additionally, Q2686 is turned on when the Save signal is HI. The delay of R2686 and C2686 allows the readout to run for a sufficient time upon entering the SAVE mode to store the readout display in the Bistable or Fast Bistable modes. When the Save mode is entered during a Multi Trace cycle, CR2686 holds C2686 discharged until the end of the X pulse to allow the readout to be stored.

Trace Alignment

The Trace Rotation supply, consisting of U2468A, Q2468, and Q2469, is an operational amplifier providing a low-impedance adjustable voltage source for the trace rotation coil. TRACE ROTATION adjustment R2465 determines the output voltage and therefore the current in the trace rotation coil. The Reduced Scan Trace Rotation adjustment, R2470, sets the difference in current required for the trace rotation coil in the Reduced Scan mode. Resistor R2470 is activated only when the Reduced Scan mode is selected by S2558.

The Y-Axis alignment supply, consisting of U2468B, Q2478, and Q2479, operates similarly to the Trace Rotation supply, except that the difference in current required between Full Scan and Reduced Scan modes is provided by fixed resistors R2471 and R2472.

Flood Gun Cathode Driver

Transistors Q3054 and Q3064 (diagram 17) comprise the Flood Gun Cathode Driver stage. The output of this stage has two states. When Q3064 is saturated, the flood gun cathode is at ground potential and the flood guns are on. When Q3064 is off, CR3066 clamps the flood gun cathode at approximately 1 volt above the flood gun anode and the flood guns are off. The flood guns are on continuously in all display modes except Save. In the Save mode, the flood guns are modulated by the Save Intensity signal, turning the flood guns on and off at a duty cycle that is determined by the setting of the front-panel SAVE INTENSITY control. Resistor R3052 and capacitor C3053 delay the turn off of the flood guns when the Save signal switches HI, allowing the Readout System to turn off before flood gun modulation begins.

The Power On signal overrides all other inputs, turning the flood guns off when the 7934 power is switched on or off. This prevents spurious erasure of the stored display due to rapid changes in supply voltages applied to the storage circuits.

http://manoman.sqhill.com

Collimation Electrode #1 and Flood Gun Anode Driver

This stage consists of a current-input operational amplifier, Q3022 and Q3026, and emitter follower Q3048 driven by a resistive divider. The inverting input (base of Q3022) operates at zero volts; R3026 is the feedback resistor. The input current signal is provided by the Collector and Collimation Electrode Decoder stage. This amplifier drives the flood gun anode through R3027. The output of the Flood Gun Anode Driver is connected to Q3048 through resistive divider R3045, R3046, and R3047 to provide the drive for Collimation Electrode #1 (CE1).

Collimation Electrode Drivers #2, #3, and #4

These driver stages are operational amplifiers similar to that discussed above for the Flood Gun Anode Driver. Transistors Q2992-Q2996 comprise the driver for CE2, Q2972-Q2976 for CE3, and Q2942-Q2946 for CE4.

Collector Mesh Driver

This stage consisting of Q2914, Q2918, and Q2924 is an operational amplifier similar to those just discussed for the Collimation Electrode Driver stages. Transistor Q2924 is an emitter follower stage added within the feedback loop to reduce the amplifier output impedance for ac and transient signals which are coupled into the output of this amplifier from the Fast Mesh Driver stage through the inter-mesh capacitance of the crt. Capacitor C2915 increases the amplifier response to these injected transients and provides high-frequency compensation.

Collector and Collimation Electrode Decoder

This stage consists of Q2904, Q2988, Q3012, Q3016, and associated diode-resistor networks. This stage decodes the logic inputs from the Main Timing, Transfer and Multi, and Storage Mode Switching stages, into discrete current level signals for input to the Collector Mesh, Collimation Electrodes, and Flood Gun Anode driver stages. This stage uses transistor switches and diode current steering networks to convert the input logic signals into currents.

Fast Mesh Driver

This stage consisting of Q2862, Q2864, Q2868, Q2873, and Q2874 is an expanded version of the simple operational amplifiers previously discussed. Transistor Q2864 is a voltage shifter stage which permits the output transistors to operate from a negative supply. Transistor Q2873 provides current limiting to protect the amplifier from output short circuits. Transistor Q2874 is an emitter follower for low ac output impedance.

Fast Mesh Decoder

This stage, consisting of Q2842, Q2852, CR2848, and CR2849, decodes inputs from the Storage Mode Switching, Tsfr and Multi, and Fast Prep stages into discrete current levels for the Fast Mesh Driver stage. When Fast Prep is LO, CR2849 is reverse biased and CR2848 is forward biased. If VP (+15 V) is LO or Q2904 is on, all of the current in R2902 provides input to the Fast Mesh Driver stage, and the output voltage to the Fast Mesh is +125 volts. When VP (+15 V) is HI and Q2904 is off, the current flow through R2901 offsets some of the current in R2902 causing the Fast Mesh to drop to +100 volts. When Fast Prep is HI, CR2848 is reverse biased and Q2852 is off. Resistors R2850 and R2855, in Fast Variable Persistence and Fast Bistable respectively, adjust the Fast Prep Level in each Fast Storage mode between zero and +20 volts. The "pump pulses" which appear on the Fast Mesh when it is at the Fast Prep Level are the result of the oscillation of the Fast Prep logic signal.

During a sweep or a transfer operation, Q2842 turns off. Resistors R2845 and R2846, in Fast Bistable and Fast Var Persist respectively, adjust the Fast Transfer Level (delta V) in each Fast Storage mode between zero and 3 volts below the Fast Prep Level. Front-panel STORAGE LEVEL control R2720 provides offset to the Fast Transfer Level in both Fast storage modes through R2748.

Storage Mesh Driver

This driver stage consists of two parts: Operational amplifier Q2802, Q2804, Q2808, and Q2814 which is similar to the Fast Mesh Driver stage, and a 600 volt switching circuit Q2818, Q2822, Q2826, Q2828, Q2834, and Q2838.

When Tsfr and Erase are both LO, Q2818 and Q2822 are off; Q2826 and Q2828 are saturated. Diode CR2833 conducts current from R2833 and holds the Storage Mesh potential at approximately 0.8 volts above the output level of the operational amplifier.

When the Erase or Tsfr signals go HI, Q2818 and Q2822 turn on and Q2826 and Q2828 turn off. Transistors Q2834 and Q2838 turn on and drive the Storage Mesh to the +600 volt supply. CR2839 disconnects the operational amplifier from the Storage Mesh at this time. Bootstrap capacitor C2833 maintains base drive to Q2834 and Q2838 throughout the 100 millisecond duration of either the Erase or Tsfr pulses.

Current limiting is provided in both the operational amplifier and 600 volt switch by light emitting diodes CR2813 and CR2831 in the output sections.

http://manoman.sqhill.com

Storage Mesh Decoder

This stage, consisting of Q2704, Q2714, Q2730, Q2734, Q2745, Q2752, Q2755, and associated diode-resistor networks, develops discrete current levels for input to the Storage Mesh Driver.

Consider operation in the Bistable mode. Initially, the currents in R2715, R2717, CR2726, R2727, and R2736 are all zero. Transistors Q2745 and Q2755 are saturated and the net current into the Storage Mesh Driver is the sum of the currents in R2746, R2747, and R2716. Resistor R2745 sets the Bistable Operating Level between +35 volts and +120 volts. When Erase goes HI, Q2752 saturates, turning off Q2755 and Q2745 and charging C2753. At the end of the Erase pulse, the voltage on the Storage Mesh is at −15 volts set by R2716. However, C2753 discharges through R2753 and R2754, causing the Storage Mesh voltage to ramp back up to the Bistable Operating Level in approximately 600 milliseconds. In Fast Bistable mode the operation of the Storage Mesh Decoder is unchanged.

Consider operation in the Variable Persistence mode. Initially, the currents in R2736, Q2745, R2727, and R2717 are zero. Diode CR2726 is forward biased and Q2714 is off so the net current into the Storage Mesh Driver is the sum of the currents in R2724, R2726, R2715, and R2716. Resistor R2725 sets the Variable Persistence Operating Level between zero and +15 Volts, while the STORAGE LEVEL control, R2720, provides an adjustable offset of zero to −5 Volts. The coupling of the 10 kilohertz Ramp waveform through C2718 and R2718 produces a 2 volt ramp at the Storage Mesh superimposed on the Variable Persistence Operating Level.

When Erase goes HI, Prep also goes HI turning Q2714 on and Q2730 off. Transistor Q2755 also turns off, momentarily interrupting the current flow through R2733 which turns Q2734 on. After the Erase pulse, Q2734 is still on so the voltage on the Storage Mesh is at the level set by R2725. As C2753 discharges, the emitter of Q2755 falls turning off Q2734 after approximately 200 milliseconds. This causes current to flow through R2736 to raise the Storage Mesh to the Variable Persistence Prep Level, adjusted by R2735 from zero to 12 volts above the Operating Level. At the end of the X pulse, the Prep signal goes LO returning the decoder to its initial state.

In the Fast Variable Persistence mode, operation of the Storage Mesh Decoder is unchanged until the end of the X pulse. In this mode, however, the Y pulse follows the X pulse holding the Prep signal HI and the Storage Mesh at the Prep Level for another 400 milliseconds. In addition W goes HI and remains HI until the end of the Tsfr pulse, and Fast Prep oscillates at the Clock signal frequency. These signals cause the Storage Mesh to drop to the Hold Level at −35 Volts after the Y pulse and remain at that level until the Tsfr pulse occurs. Superimposed on the Hold Level are the "pump pulses", logically inverted from the Fast Prep signal and with height adjustable by R2705 from zero to 15 Volts above the Operating Level.

http://manoman.sqhill.com

http://manoman.sqhill.com

MAINTENANCE

This section of the manual contains information for performing preventive maintenance, troubleshooting, and corrective maintenance for the 7934 Storage Oscilloscope.

PREVENTIVE MAINTENANCE

Preventive maintenance, when performed on a regular basis, can prevent instrument breakdown and may improve the reliability of the instrument. The severity of the environment to which the instrument is subjected will determine the frequency of maintenance. A convenient time to perform preventive maintenance is preceding electrical adjustment of the instrument.

Cabinet Panel Removal

WARNING

Dangerous potentials exist at several points throughout this instrument. When the instrument is operated with the covers removed, do not touch exposed connections or components. Some transistors have voltages present on their cases. Disconnect power before cleaning the instrument or replacing parts.

The cabinet panels provide protection to personnel from operating potentials present within the instrument. In addition, they reduce radiation of electromagnetic interference from the instrument. Operate the instrument with the panels in place to protect the interior from dust. The panels also channel the air in the instrument for proper cooling.

The cabinet panels are held in place by slotted fasteners. To remove the panels, turn each fastener counterclockwise a quarter turn with a large screwdriver. Lift the panels away. When replacing the panels, the right panel (as you face the front of instrument) has ventilation holes near the front; the left panel has ventilation holes about two-thirds toward the rear.

Cleaning

The 7934 should be cleaned as often as operating conditions require. Accumulation of dirt in the instrument can cause overheating and component breakdown. Dirt on components acts as an insulating blanket and prevents efficient heat dissipation. It also provides an electrical conduction path which may result in instrument failure. The side panels reduce the amount of dust reaching the interior of the instrument. Operation without the panels in place necessitates more frequent cleaning.

CAUTION

Avoid the use of chemical cleaning agents which might damage the plastics used in this instrument. Use a non-residue type of cleaner, preferably isopropyl alcohol, totally denatured ethyl alcohol, or TP35. Before using any other type of cleaner, consult your Tektronix Service Center or representative.

Cleaning The Exterior. Loose dust accumulated on the outside of the instrument can be removed with a soft cloth or small brush. The brush is particularly useful for dislodging dirt on and around the front-panel controls. Dirt which remains can be removed with a soft cloth dampened in a mild detergent and water solution. Abrasive cleaners should not be used.

Cleaning The CRT. Clean the plastic light filter, implosion shield, and the crt faceplate with a soft, lint-free cloth dampened with denatured alcohol.

The crt mesh filter (furnished with Option 3 only) can be cleaned as follows:

1. Hold the mesh filter in a vertical position and brush lightly with a soft, No. 7 water color brush to remove light coatings of dust or lint.

2. Greasy residues, or dried-on dirt, can be removed with a solution of warm water and a neutral-pH liquid detergent. Use the brush to lightly scrub the filter.

http://manoman.sqhill.com

3. Rinse the filter thoroughly in clean water and allow to air dry.

4. If any lint or dirt remains, use clean low-pressure air to remove it. Do not use tweezers or other hard cleaning tools on the filter, as the special finish may be damaged.

5. When not in use, store the mesh filter in a lint-free dust-proof container, such as a plastic bag.

Cleaning The Interior. Cleaning the interior of the instrument should only be occasionally necessary. The best way to clean the interior is to blow off the accumulated dust with dry, low-velocity air (approximately 5 psi). Remove any dirt with a soft brush or a cloth dampened with a mild detergent and water solution. A cotton-tipped applicator is useful for cleaning in narrow spaces, or for cleaning more delicate circuit components.

CAUTION

Circuit boards and components must be dry before applying power to prevent damage from electrical arcing.

The high-voltage circuits should receive special attention. Excessive dirt in this area may cause high-voltage arcing and result in improper instrument operation.

Visual Inspection

The 7934 should be inspected occasionally for such defects as broken connections, improperly installed circuit boards, and heat-damaged parts. The corrective procedure for most visible defects is obvious; however, particular care must be taken if heat-damaged parts are found. Overheating usually indicates other trouble in the instrument; therefore, correcting the cause of overheating is important to prevent recurrence of the damage.

Semiconductor Checks

Periodic checks of semiconductors are not recommended. The best check of semiconductor performance is actual operation in the instrument. More details on semiconductors are given under Troubleshooting later in this section.

Periodic Electrical Adjustments

To ensure accurate measurements, check the electrical adjustment of this instrument after each 1000 hours of operation, or every six months if used infrequently. In addition, replacement of components may necessitate adjustment of the affected circuits. Complete adjustment instructions are given in Section 6, Checks and Adjustments. The Checks and Adjustments procedure can be helpful in localizing certain troubles in the instrument, and in some cases, may correct them.

TROUBLESHOOTING

The following information is provided to facilitate troubleshooting of the 7934 Storage Oscilloscope. Information contained in other sections of this manual should be used in conjunction with the following data to aid in locating a defective component. An understanding of the circuit operation is helpful in locating troubles. See Section 4, Theory of Operation, for this information.

Troubleshooting Aids

Diagrams. Complete schematic diagrams are given on the pullout pages in Section 8, Diagrams and Circuit Board Illustrations. The component number and electrical value of each component in this instrument are shown on these diagrams. (See the first page of the Diagrams and Circuit Board Illustrations section for definitions of the reference designators and symbols used to identify components in this instrument.) Important voltages and numbered waveform test points are also shown on the diagrams. Important waveforms are located adjacent to each diagram. The portions of circuits mounted on circuit boards are enclosed with heavy, solid-black lines. The component locator table on the back of the preceding schematic provides an index to help locate components on the diagram. Each schematic is overlayed by a grid locator with a cross-reference table to facilitate location of components on the schematic or the circuit board.

Circuit Board Illustrations. To aid in locating circuit boards, a picture showing the location of all circuit boards in the 7934 is shown on the first pullout page in Section 8, Diagrams and Circuit Board Illustrations. In addition, a smaller circuit-board locator picture is given on the back of the pullout page facing the associated schematic diagram. Also provided here is an illustration of the circuit board(s) for the circuit shown on the adjacent diagram. The illustration shows the physical location of the components on the board. Each circuit board illustration is overlayed by a grid locator with a cross-reference table to facilitate rapid location of components on the schematic diagram or circuit board.

Troubleshooting Chart. A troubleshooting chart is given in Section 8, Diagrams and Circuit Board Illustrations to aid in locating a defective circuit. The shaded blocks on the

http://manoman.sqhill.com

Troubleshooting Chart indicate circuit(s) that may cause the indicated malfunction. Operation of the circuits listed is discussed in detail in Section 4, Theory of Operation.

Adjustment and Test Point Locations. To aid in locating test points and adjustable components called out in the various sections of the Check and Adjustment procedure, the Adjustment and Test Point Locations pullout pages are provided in Section 8, Diagrams and Circuit Board Illustrations.

Component Color Coding. This instrument contains carbon composition resistors, metal-film resistors, and wire-wound resistors. The resistance values of wire-wound resistors are usually printed on the component body. The resistance values of composition resistors and metal-film resistors are color coded on the components using the EIA color code (some metal-film resistors may have the value printed on the body). The color code is read starting with the stripe nearest the end of the resistor. Composition resistors have four stripes, which consist of two significant figures, a multiplier, and a tolerance value (see Fig. 5-1). Metal-film resistors have five stripes consisting of three significant figures, a multiplier, and a tolerance value.

The values of common disc capacitors and small electrolytics are marked on the side of the component body. The white ceramic and epoxy-coated tantalum capacitors are color coded using a modified EIA code (see Fig. 5-1).

The cathode end of glass-encased diodes is indicated by a stripe, a series of stripes, or a dot. The cathode and anode ends of metal-encased diodes can be identified by the diode symbol marked on the body.

Semiconductor Lead Configurations. Figure 5-2 shows the lead configurations of the semiconductor devices used in the 7934 Storage Oscilloscope.

CAUTION

Static discharge can damage semiconductor components in this instrument.

Static-Sensitive Devices. This instrument contains electrical components that are susceptible to damage from static discharge. See Table 5-1 for relative susceptibility of various classes of semiconductors. Static voltages of 1 kV to 30 kV are common in unprotected environments.

Observe the following precautions to avoid damage:

1. Minimize handling of static-sensitive components.

2. Transport and store static-sensitive components or assemblies in their original containers, on a metal rail, or conductive foam. Label any package that contains static-sensitive assemblies or components.

3. Discharge the static voltage from your body by wearing a wrist strap while handling these components. Servicing static-sensitive assemblies or components should be performed only at a static-free work station by qualified service personnel.

4. Nothing capable of generating or holding a static charge should be allowed on the work station surface.

5. Keep the component leads shorted together when storing the component whenever possible.

6. Pick up components by the body, never by the leads.

7. Do not slide the components over any surface.

8. Avoid handling components in areas that have a floor or work-surface covering capable of generating a static charge.

9. Use a soldering iron that is connected to earth ground.

10. Use only special antistatic vacuum type desoldering tools such as the Pace model PC10.

http://manoman.sqhill.com

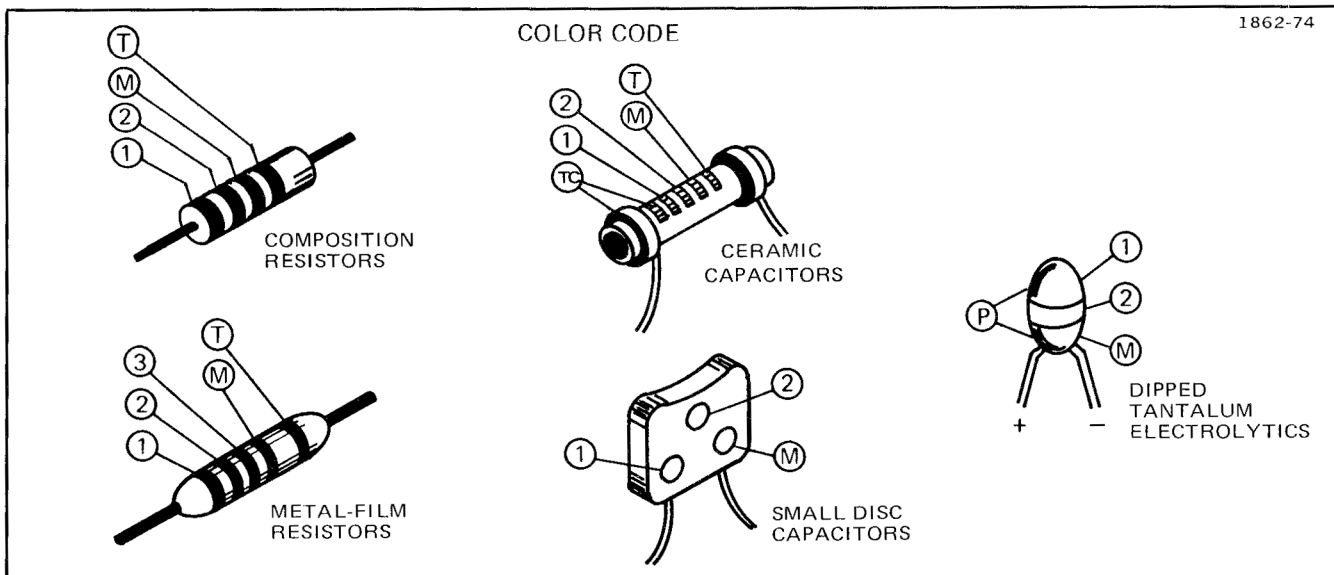

(1) (2) and (3) - 1ST, 2ND, AND 3RD SIGNIFICANT FIGS.
(M) - MULTIPLIER (T) - TOLERANCE;
(TC) - TEMPERATURE COEFFICIENT.

(T) AND/OR (TC) COLOR CODE MAY NOT BE PRESENT ON SOME CAPACITORS;
(P) - POLARITY AND VOLTAGE RATING

COLOR	SIGNIFICANT FIGURES	RESISTORS		CAPACITORS			DIPPED TANTALUM VOLTAGE RATING
		MULTIPLIER (OHMS)	TOLERANCE	MULTIPLIER (pF)	TOLERANCE OVER 10pF	TOLERANCE UNDER 10pF	
BLACK	0	1	---	1	±20%	± 2pF	4VDC
BROWN	1	10	±1%	10	±1%	±0.1pF	6VDC
RED	2	10^2 or 100	±2%	10^2 or 100	±2%	---	10VDC
ORANGE	3	10^3 or 1 K	±3%	10^3 or 1000	±3%	---	15VDC
YELLOW	4	10^4 or 10K	±4%	10^4 or 10,000	+100% −0%	---	20VDC
GREEN	5	10^5 or 100 K	±1/2%	10^5 or 100,000	±5%	±0.5pF	25VDC
BLUE	6	10^6 or 1 M	±1/4%	10^6 or 1,000,000	---	---	35VDC
VIOLET	7	---	±1/10%	10^7 or 10,000,000	---	---	50VDC
GRAY	8	---	---	10^{-2} or 0.01	+80% −20%	±0.25pF	---
WHITE	9	---	---	10^{-1} or 0.1	±10%	±1pF	3VDC
GOLD	---	10^{-1} or 0.1	±5%	---	---	---	---
SILVER	---	10^{-2} or 0.01	±10%	---	---	---	---
NONE	---	---	±20%	---	±10%	±1pF	---

Figure 5-1. Color code for resistors and capacitors.

http://manoman.sqhill.com

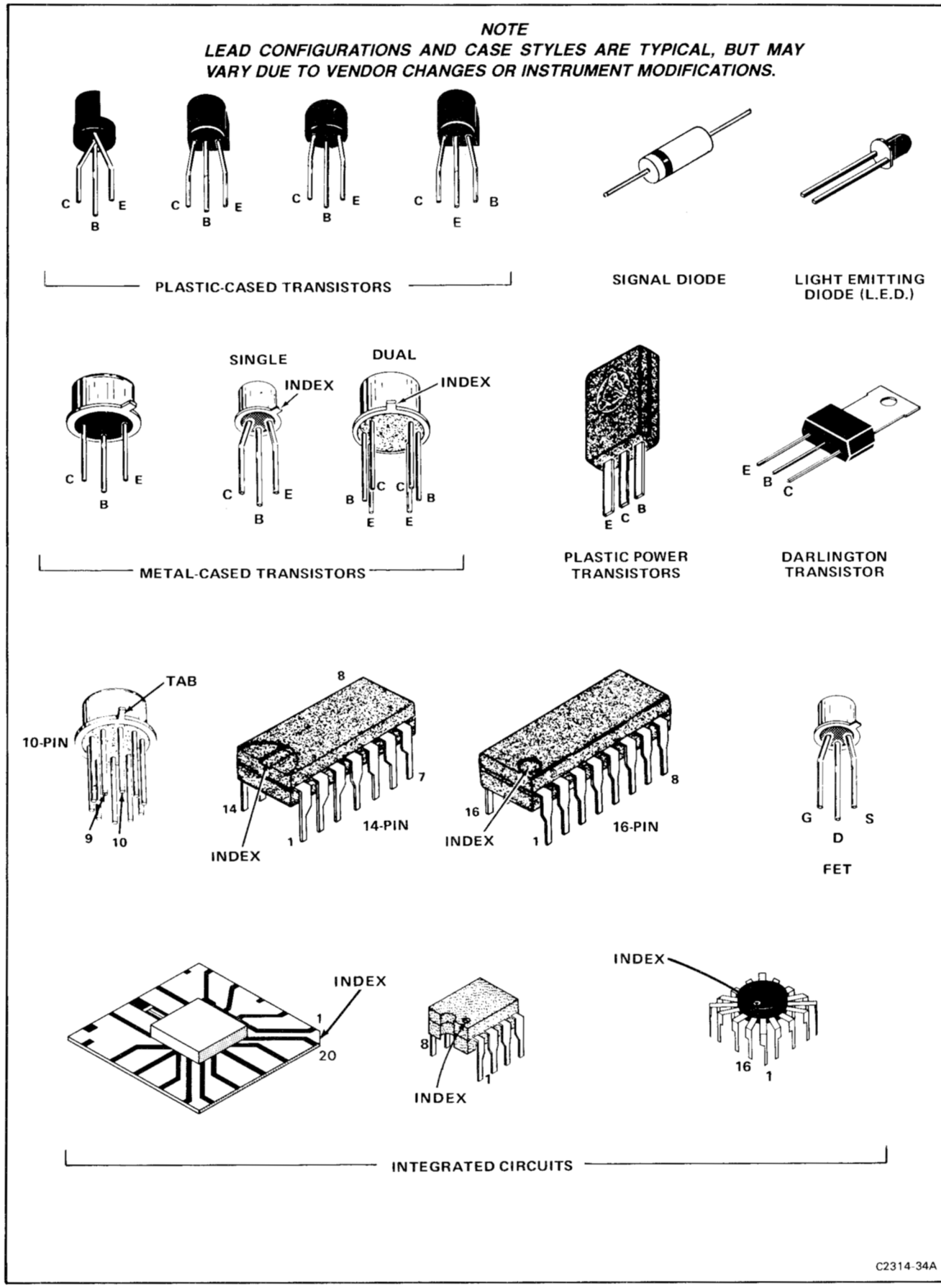

Figure 5-2. Semiconductor lead configurations.

http://manoman.sqhill.com

Table 5-1
RELATIVE SUSCEPTIBILITY TO STATIC DISCHARGE DAMAGE

Semiconductor Classes	Voltage Equivalent*
MOS or CMOS microcircuits or discretes, or linear microcircuits with MOS inputs (most sensitive)	100 to 500 volts
ECL	200 to 500 volts
Schottky signal diodes	250 volts
Schottky TTL	500 volts
High-frequency bipolar transistors	400 to 600 volts
JFETs	600 to 800 volts
Linear Microcircuits	400 to 1000 volts
Low-power Schottky TTL	900 volts
TTL (least sensitive)	1200 volts

***Voltage discharged from a 100 pF capacitor through a resistance of 100 ohms.**

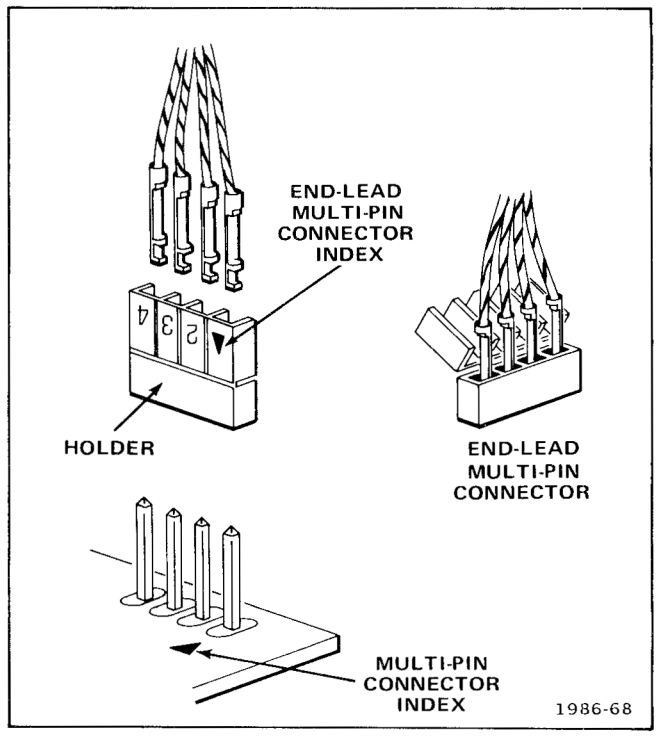

Figure 5-3. Orientation of multi-pin connector holders.

Multi-Pin Connector Holders. The multi-pin connector holders are keyed with two triangles, one on the holder and one on the circuit board. When a connection is made to a circuit board the orientation of the triangle on the multi-pin connector holder is determined by the index (triangle, dot, or square) printed on the circuit board (see Fig. 5-3).

Troubleshooting Equipment

The following equipment is useful for troubleshooting the 7934 Storage Oscilloscope:

1. Transistor Tester

Description: Dynamic-type tester.

Purpose: Test semiconductors.

Recommended type: Tektronix 577/177 Curve Tracer, Tektronix 576 Curve Tracer, Tektronix 7CT1N Curve Tracer plug-in unit and a 7000-series oscilloscope system, or a Tektronix 5CT1N Curve Tracer plug-in unit and a 5000-series oscilloscope system.

2. Digital Multimeter

Description: 10 megohm input impedance and 0 to 1 kilovolt range, ac and dc; ohmmeter, 0 to 50 megohms; accuracy, within 0.1%. Test probes must be insulated to prevent accidental shorting.

Purpose: Check voltages and resistances.

3. Test Oscilloscope

Description: Frequency response, dc to 100 megahertz minimum; deflection factor, 5 millivolts to 5 volts/division and 1 milliamp to 1 amp/division. A 10X, 10-megohm voltage probe should be used to reduce circuit loading for voltage measurements. For current waveforms, use a Tektronix current probe with passive termination.

Purpose: Check operating waveforms.

Recommended type: Refer to the Tektronix Products Catalog for applicable oscilloscope system.

4. Variable Autotransformer

Description: Output variable from 0 to 140 volts (or 0 to 280 volts), 10 amp minimum rating. Must have three-wire power cord, plug, and receptacle.

Purpose: Vary input line voltage when troubleshooting in the power-supply unit.

Recommended type: General Radio W10MT3W Variac Autotransformer (for 115-volt line only).

5. Isolation Transformer

Description: 1:1 turns ratio, 500 volt-amperes minimum rating, 50-60 cycle. Must have three-wire power cord, plug, and receptacle with ground connection carried through from input to output.

http://manoman.sqhill.com

Purpose: To isolate 7934 from line potential when troubleshooting power supply.

Recommended type: Stancor #P6298 (for 115-volt line only) modified to include three-wire power cord, plug, and receptacle.

Troubleshooting Techniques

This troubleshooting procedure is arranged to check the simple trouble possibilities before proceeding with extensive troubleshooting. The first few checks ensure proper connection, operation, and adjustment. If the trouble is not located by these checks, the remaining steps aid in locating the defective component. When the defective component is located, replace it following the replacement procedures given under Corrective Maintenance.

1. Check Control Settings

Incorrect control settings can indicate a trouble that does not exist. If there is any question about the correct function or operation of any control on the 7934, refer to Section 2, Operating Instructions.

2. Check Associated Equipment

Before proceeding with troubleshooting, check that the equipment used with this instrument is operating correctly. Also, check that the input signals are properly connected and that the interconnecting cables are not defective. Check the line-voltage source.

3. Visual Check

Visually check that portion of the instrument in which the trouble is located. Many troubles can be found by visible indications, such as unsoldered connections, broken wires, damaged circuit boards, and damaged components.

4. Check Instrument Adjustment

Check the electrical adjustment of this instrument, or of the affected circuit if the trouble appears in one circuit. The apparent trouble may only be a result of misadjustment. Complete adjustment instructions are given in Section 6, Checks and Adjustments.

5. Isolate Trouble to a circuit

To isolate trouble to a particular circuit, note the trouble symptom. The symptom often identifies the circuit in which the trouble is located. When trouble symptoms appear in more than one circuit, check the affected circuits by taking voltage and waveform measurements. Also check for the correct output signals at the rear-panel output connectors with a test oscilloscope. If the signal is correct, the circuit is working correctly up to that point. For example, correct sawtooth output indicates that the time-base unit and sawtooth output portion of the Output Signals circuit is operating correctly. If a malfunction in the Readout System is suspected of causing trouble to appear in the Z-Axis Amplifier, Vertical Amplifier, or Horizontal Amplifier circuits, the trouble can be localized by disconnecting the Readout System circuit board. This board can be disconnected without significantly affecting the operation of other circuits in the instrument.

Incorrect operation of all circuits often indicates trouble in the power supply. Check first for correct voltage of the individual supplies. However, a defective component elsewhere in the instrument can appear as a power-supply trouble and may also affect the operation of other circuits. If incorrect operation of the power supplies is suspected, refer to Troubleshooting the High-Efficiency Power-Supply Unit given later in this section.

Figure 8-51 provides a guide for locating a defective circuit. Start at the top of the chart and perform the checks given on the left side of the page until a step is found that does not produce the indicated results. Further checks, or the circuit in which the trouble is probably located, are listed to the right of the step. This chart does not include checks for all possible defects; use steps 6 and 7 in such cases.

After the defective circuit has been located, proceed with steps 6 and 7 to locate the defective component(s).

6. Check Voltages and Waveforms

Often the defective component can be located by checking for the correct voltages or waveforms in the circuit. Typical voltages and waveforms are given in Section 8, Diagrams and Circuit Board Illustrations.

NOTE

Voltages and waveforms given in Section 8, Diagrams and Circuit Board Illustrations, are not absolute and may vary slightly between 7934 Storage Oscilloscopes. To obtain operating conditions similar to those used to take these readings, see the appropriate schematic.

7. Check Individual Components

The following procedures describe methods of checking individual components in the 7934. Components which are soldered in place are best checked by first disconnecting one end. This isolates the measurement from the effects of surrounding circuitry.

http://manoman.sqhill.com

WARNING

To avoid electric-shock hazard, always disconnect the 7934 from the power source before removing or replacing components.

FUSES. Check for open fuses by checking continuity with an ohmmeter.

TRANSISTORS. A good check of transistor operation is actual performance under operating conditions. A transistor can most effectively be checked by substituting a new component for it (or one which has been previously checked). However, be sure that circuit conditions are not such that a replacement transistor might also be damaged. If substitute transistors are not available, use a dynamic tester. Static-type testers are not recommended, since they do not check operation under simulated operating conditions.

INTEGRATED CIRCUITS. Integrated circuits can be checked with a voltmeter, test oscilloscope, or by direct substitution. A good understanding of the circuit operation is essential to troubleshooting circuits using integrated circuits. In addition, operating waveforms, logic levels, and other operating information for the integrated circuits are given in Section 4, Theory of Operation and Section 8, Diagrams and Circuit Board Illustrations. Use care when checking voltages and waveforms around the integrated circuits so that adjacent leads are not shorted together. A convenient means of clipping a test probe to the in-line, multi-pin integrated circuits is with an integrated-circuit test clip. This device also doubles as an integrated-circuit extraction tool.

DIODES. A diode can be checked for an open or shorted condition by measuring the resistance between terminals with an ohmmeter scale having a low internal source current, such as the R X 1K scale. The resistance should be very high in one direction and very low when the meter leads are reversed.

CAUTION

When checking diodes, do not use an ohmmeter scale that has a high internal current, since high currents may damage the diodes under test.

RESISTORS. Check the resistors with an ohmmeter. Resistor tolerances are given in Section 7, Replaceable Electrical Parts. Normally, resistors do not need to be replaced unless measured value varies widely from the specified value.

CAPACITORS. A leaky or shorted capacitor can best be detected by checking resistance with an ohmmeter on the highest scale. Do not exceed the voltage rating of the capacitor. The resistance reading should be high after initial charge of the capacitor. An open capacitor can best be detected with a capacitance meter or by checking if the capacitor passes ac signals.

8. Repair and Adjust the Circuit

If any defective parts are located, follow the replacement procedures given under Component Replacement in this section. Check the performance of any circuit that has been repaired or that has had any electrical components replaced. Adjustment of the circuit may be necessary. See Section 6, Checks and Adjustments for performance check and adjustment procedure.

TROUBLESHOOTING THE HIGH-EFFICIENCY POWER-SUPPLY UNIT

General

The following information is provided to facilitate troubleshooting the high-efficiency power-supply unit. Information contained in other sections of this manual should be used in conjunction with this procedure to aid in locating a defective component. An understanding of the circuit operation is valuable in locating troubles. See Section 4, Theory of Operation, for this information. Specifications for the troubleshooting equipment referred to in this procedure are given earlier in this section under Troubleshooting Equipment.

WARNING

Extreme caution must be used when troubleshooting in the power-supply unit due to the line voltage and the high-voltage/high-current potentials present in the unit.

When a fault condition occurs which is not of sufficient magnitude to open the line fuse, power-supply protection circuitry causes the inverter to operate in a pulse mode. In this mode the inverter turns on for a short period of time, and then turns off for a longer period of time. This cycle repeats until power is disconnected or the malfunction is corrected. This pulse mode causes either a "ticking" or a "chirping" sound. Whenever either of these sounds is heard, turn off the 7934 and proceed with the Preliminary Power-Supply Check Procedure given below.

http://manoman.sqhill.com

Preliminary Power-Supply Check Procedure

WARNING

To avoid electric shock, always disconnect the instrument from the power source before removing or replacing components or plug-in units.

1. Remove all plug-in units from the mainframe.

2. Set the CONTROL ILLUMINATION switch on the rear panel to the OFF position, and the GRAT ILLUM control on the front panel to the fully clockwise position.

3. Remove the power-supply unit from the mainframe following the procedure given later in this section under Component Removal and Replacement.

4. Connect the power-cord plug of the 7934 to the output of a variable autotransformer which is set for 115 volts (or 230 volts). Connect the autotransformer to an isolation transformer and plug the isolation transformer into a 115-volt (or 230 volt) power source.

5. Push the 7934 POWER button in (to turn the instrument on) and note the trouble symptoms.

6. Turn the 7934 off and proceed to the appropriate step in the Troubleshooting Procedure as indicated by the Trouble symptom column in Table 5-2.

Power-Supply Troubleshooting Procedure

STEP A: Check Line Fuse. To check the line fuse, proceed as follows:

1. Check the line fuse (F10), located on the rear panel of the power-supply unit, for continuity and proper rating (see Section 7, Replaceable Electrical Parts).

2. If the line fuse is open, replace with a new one of proper rating.

STEP B: Isolate Power Supply Malfunction From Mainframe Circuitry. To isolate the malfunction, proceed as follows:

Table 5-2
RECOMMENDED POWER SUPPLY TROUBLESHOOTING SEQUENCE

Trouble Symptom	Procedure	Proceed to Troubleshooting Step:
7934 inoperative; no pulse mode.	1. Check line fuse.	A
7934 inoperative; no pulse mode; line fuse open	1. Isolate malfunction from the mainframe circuitry.	B
	2. Check line input circuit.	D
	3. Check inverter circuit.	G
7934 inoperative; no pulse mode; line fuse normal.	1. Check inverter circuit.	G
7934 operating in the pulse mode.	1. Isolate malfunction from the mainframe circuitry.	B
	2. Check pre-regulated power supplies.	C
	3. Check crt and high-voltage circuits.	E
	4. Check inverter control circuit.	F
	5. Check inverter circuit.	G

http://manoman.sqhill.com

WARNING

Use extreme caution when troubleshooting in the Power-Supply Unit, to avoid electric shock. Stored dc potentials on the Power-Supply Inverter circuit board remain long after the instrument is disconnected from the power source. Verify that the power-cord plug is disconnected and that the line storage capacitors (C16 and C17) are completely discharged before attempting any repairs or resistance measurements. (A warning-indicator neon bulb, located on the Power-Supply Inverter board, flashes when this stored voltage exceeds about 80 volts. However, simply because the neon bulb is not flashing does not mean that the capacitors are fully discharged.)

1. Remove the 7934 power-cord plug from the power source.

2. Remove the protective cover from the power-supply unit following the procedure under Access to Components in the Power-Supply Unit given later in this section.

3. Manually discharge the line storage capacitors using the procedure given under Access to Components in the Power-Supply Unit.

4. Disconnect P3068, the four pin connector with the black housing on the lower rear of the Storage board, before making the following resistance checks. Check the resistance of the power supplies at the test points given in Table 5-3. (See Figures 8-43 for the location of these test points.)

NOTE

Connect the common lead of the ohmmeter to ground when measuring power-supply resistance.

5. If any of the resistance readings are significantly lower than that listed, remove the electrical connections between the mainframe and the power-supply unit. Disconnect P82 and P83 on the LV Regulator board (see Figure 8-19). This isolates the circuitry in the mainframe from the power-supply unit. Recheck the resistance. If the readings remain low, the malfunction is located within the power supply. If the readings increase to normal or above, the malfunction is in the mainframe.

6. Replace all electrical connections which were disconnected in parts 4 and 5.

STEP C: Check Pre-Regulated Power Supplies. To check the pre-regulated power supplies, proceed as follows:

1. Connect a 10X voltage probe from the test oscilloscope to resistor R84 on the Control Rectifier board (see Figure 8-16). Refer to Access to Components in the Power-Supply Unit given later in this section for access to the Control Rectifier board. Set the test oscilloscope vertical deflection factor as necessary for an on-screen display; set the horizontal sweep rate for 2 milliseconds/division.

2. Set the variable autotransformer for 115 volts (or 230 volts). Connect the 7934 power-cord plug to the variable autotransformer; turn on the 7934.

3. Compare the waveform on the test oscilloscope to those shown in Figure 5-4. If the waveform resembles that of Figure 5-4A, proceed to Step E of this procedure. If it resembles that of Figure 5-4B, proceed with part 4 of this step.

4. Disconnect the 10X probe. Set the test oscilloscope vertical coupling to dc and the horizontal sweep rate to 10 milliseconds/division.

Table 5-3
TYPICAL POWER-SUPPLY RESISTANCE

Power Supply	Test Point	Ohmmeter Range	Typical Resistance Reading (ohms)
+50 V	TP +50V Sense	20k	1.8k
+15 V	TP +15V Sense	2k	130
+5 V	TP +5V Sense	2k	15
−15 V	TP −15V Sense	2k	100
−50 V	TP −50V Sense	X 100	500

http://manoman.sqhill.com

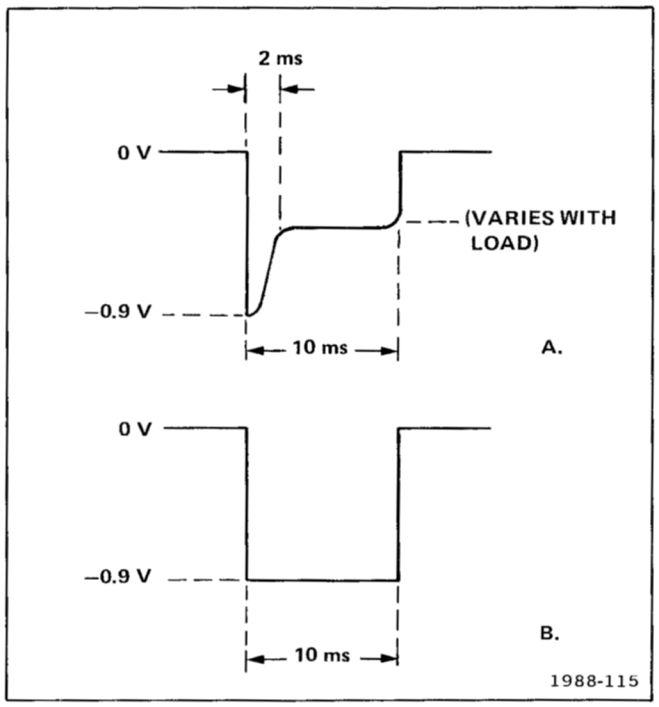

Figure 5-4. Current sensing waveform at R84 showing: A) Power supplies not in current limit operation. B) Power supplies in current limit operation.

5. Connect the 10X probe to the test point for each power supply given in Table 5-4 (see Figs 8-16 and 8-19 for test points). Note the polarity, amplitude, and shape of the waveform present at each test point. (Adjust the vertical deflection factor of the test oscilloscope as necessary to maintain an on-screen display.)

NOTE

Look for a power supply where the voltage is very low in relation to the specified supply voltage.

6. When a low supply voltage is found, disconnect the 7934 from the power source and discharge the line storage capacitors following the procedure given under Access to Components in the Power-Supply Unit. Check for shorted components in the suspected power supply; also check the filter capacitors for leakage.

STEP D: Check Line Input Circuit. To check the input circuit, proceed as follows:

1. Disconnect the 7934 from the variable autotransformer and discharge the line storage capacitors following the procedure given under Access to Components in the Power-Supply unit.

Table 5-4
POWER SUPPLY TEST POINTS

Pre-Regulated Power supply	Test Point Located on Control Rectifier Board
+108 V	TP126
+54 V	Pin 4 of P52
+17 V	Pin 6 of P52
−17 V	Pin 2 of P52
+8 V	Pin 7 of P50
−54 V	Pin 3 of P52
+5 V Lights	Pin 10 of P82 (on LV Regulator board)

2. Replace the line fuse.

3. Check diode bridge CR15 on the Inverter board (see Figure 8-18) and the associated line input circuit for a shorted component. If the circuit appears normal, connect the power-cord plug to the variable autotransformer.

4. Attach a 10X voltage probe from the test oscilloscope to one of the screws used to discharge C16 and C17 (see Figure 5-11). Set the variable autotransformer for 20 volts and turn the 7934 on. Set the test oscilloscope for line triggering.

5. Check for an ac waveform on the test oscilloscope (see Figure 5-5). Note the amount of dc offset in the waveform. Move the probe tip to the other capacitor screw. Check for an ac waveform which is both dc offset an equal amount and is opposite in polarity from the previous waveform. (This checks the condition of the line storage capacitors.)

STEP E: Check CRT and High-Voltage Circuits. To check the crt and high-voltage circuitry, proceed as follows:

1. Disconnect the 7934 from the power source and discharge the line storage capacitors following the procedure given under Access to Components in the Power-Supply Unit.

2. Remove multi-lead cable P40 from the Control Rectifier board (see Figure 8-16).

http://manoman.sqhill.com

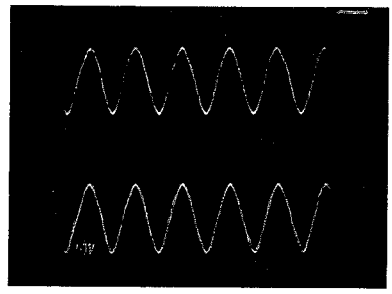

1988-102

Figure 5-5. Typical waveforms on C16 and C17 with the line voltage set to about 20 V.

3. Set the variable autotransformer for 115 volts (or 230 volts). Connect the 7934 power-cord plug to the variable autotransformer; turn the 7934 on.

4. Check for stable operation (no pulse mode) of the power supplies. If the power supplies operate properly, a crt failure or malfunction in the high-voltage circuitry is indicated.

STEP F: Check Inverter Control Circuit. To check the inverter control circuit, proceed as follows:

1. Disconnect the 7934 from the power source and discharge the line storage capacitors following the procedure given under Access to Components in the Power-Supply Unit.

2. Remove Q54 (see Figure 8-16) from the Control Rectifier board.

3. Connect the 7934 power-cord plug to the variable autotransformer. Turn the 7934 on and apply 115 volts (or 230 volts) from the variable autotransformer. If the power supplies stabilize, check the inverter control circuit for a malfunction. If the 7934 continues in pulse mode, proceed to part 4 of this step.

4. Repeat part 1 of this step. Then remove Q52 from the Control Rectifier board (see Figure 8-16).

5. Set the variable autotransformer to 0 volts. Connect the 7934 power-cord plug to the variable autotransformer. Turn the 7934 on. While monitoring the +108 V test point TP126 on the LV Regulator board (see Figure 8-32) with a voltmeter, slowly increase the output of the variable autotransformer until the voltmeter just reads +108 volts.

NOTE

If the variable autotransformer output is increased past the point where the voltmeter just reaches a reading of +108 volts, the 7934 will switch to pulse mode.

6. If the power supplies stabilize, check U75 and the inverter control circuit for a malfunction. If the 7934 continues in the pulse mode, replace Q52 and Q54 and proceed to Step G of this procedure.

STEP G: Check Inverter Circuit. To check the inverter circuit, proceed as follows:

1. Disconnect the 7934 power-cord plug from the power source and discharge the line storage capacitors following the procedure given under Access to Components in the Power-Supply Unit.

2. Remove Q34, Q40, CR34, and CR41 on the Power-Supply Inverter board (see Figure 8-18) and check the characteristics of each with a curve tracer. Install the tested or replaced components in the Power-Supply Inverter board. Replace the line fuse, if it is open.

3. If the faulty component was not found, check Q43, Q45, and VR45 (see Figure 8-18) with a curve tracer.

NOTE

A shift in the Zener voltage of VR45 can cause erratic operation of the inverter circuit.

4. If the 7934 continues in the pulse mode or continues to open the line fuse, check the current waveform through T30. To do this, first repeat part 1 of this step. Then connect a current probe from the test oscilloscope to the gray lead that passes through toroid transformer T30, Set the test oscilloscope for a vertical deflection factor of about 1 volt/division and a horizontal sweep rate of 2 milliseconds/division. Connect the 7934 power-cord plug to the variable autotransformer which is set for 0 volt. Turn the 7934 on and slowly increase the variable autotransformer output to about 60 volts. Check for a burst waveform on the test oscilloscope (similar to that shown in Figure 5-6).

http://manoman.sqhill.com

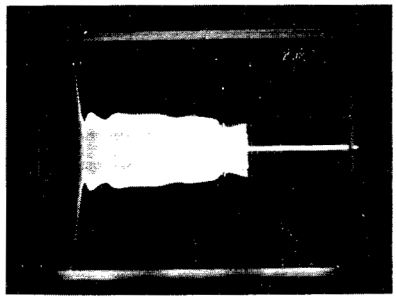

1988-103

Figure 5-6. Current waveform at T30 showing burst operation at line voltage of about 60 V.

NOTE

The burst waveform indicates that the inverter circuit is attempting to start. If a burst waveform occurs, proceed to part 5; if no burst waveform is obtained, proceed to part 6.

5. If a burst waveform was obtained in part 4 above, check for stable inverter operation when the line input voltage is increased to about 85 volts. Figure 5-7 shows the current waveform at T30 for normal inverter operation at a line voltage of 115 volts. (NOTE: The test oscilloscope horizontal sweep rate has been changed to about 50 microseconds/division for Figure 5-7.)

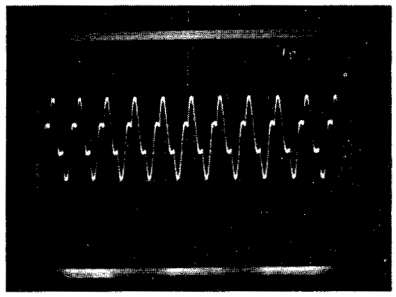

1988-104

Figure 5-7. Current waveform at T30 for normal inverter operation at line voltage of 115 V.

6. If no burst waveform occurred in part 4, repeat part 1 of this step. Then disconnect the current probe. Connect a 10X voltage probe from the test oscilloscope to TP34 on the Power-Supply Inverter board (see Figure 8-18). (After following the procedure under Access to Components in the Power Supply Unit, remove the line inverter shield from the circuit board. TP34 is labeled "TANK" on the Power Supply Inverter board. Set the variable autotransformer for 20 volts and check for a filtered line waveform which is centered about 0 volts (see Figure 5-8). If the waveform is not centered, check Q46, CR32, CR40, CR45, and CR49 for shorts or leakage.

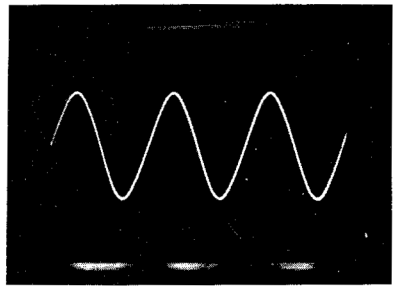

1988-105

Figure 5-8. Waveform at TP34 on the Power-Supply Inverter board with the line voltage at about 20 V.

STEP H: Check LV Rectifier Circuit. To check the LV Rectifier circuit, proceed as follows:

1. Disconnect the 7934 power-cord plug from the power source and discharge the line-storage capacitors following the procedure given under Access to Components in the Power-Supply Unit. Inspect the Control Rectifier board and connecting cables for shorts or damaged components.

2. Remove dual diode CR151 from the Control Rectifier board (see Fig 8-16) and check with a curve tracer. Reinstall tested or replaced parts, making certain that the case is not shorted to the heat sink.

3. Lift one side of CR140, CR141, CR142, and CR143 on the Control Rectifier board (see Figure 8-16) and check with a curve tracer. Reconnect tested or replaced parts.

4. Lift one side each of CR130, CR131, CR132, CR133, CR150, and CR153 on the Control Rectifier board (see Figure 8-16) and check with a curve tracer. Reconnect tested or replaced parts.

http://manoman.sqhill.com

5. Check the electrolytic capacitors which filter the supplies for shorts.

CORRECTIVE MAINTENANCE

Corrective maintenance consists of component replacement and instrument repair. Special techniques required to replace components in the 7934 Storage Oscilloscope are given here.

Obtaining Replacement Parts

All electrical and mechanical part replacements for the 7934 can be obtained through your local Tektronix Field Office or representative. However, many of the standard electronic components can be obtained locally in less time than is required to order them from Tektronix, Inc. Before purchasing or ordering replacement parts, check parts list for value, tolerance, rating, and description.

NOTE

When selecting replacement parts, remember that the physical size and shape of a component may affect its performance in the instrument. All replacement parts should be direct replacements unless you know that a different component will not adversely affect instrument performance.

Special Parts. Some parts are manufactured or selected by Tektronix, Inc. to satisfy particular requirements, or are manufactured to Tektronix, Inc. specifications. Most of the mechanical parts used in this instrument have been manufactured by Tektronix, Inc. To determine manufacturer of parts, refer to Cross Index to Manufacturers given in the parts list.

Also, some electrical parts are selected for a value that provides optimum circuit operation. These parts are identified by "SEL" next to the value on the schematic diagram. Criteria for these selected parts are provided in tables adjacent to the schematic diagram on which the part is located.

Ordering Parts. When ordering replacement parts from Tektronix, Inc., include the following information:

1. Instrument type.
2. Instrument serial number.
3. A description of the part (if electrical, include circuit number).
4. Tektronix part number.

Soldering Techniques

WARNING

To avoid electric-shock hazard, disconnect the instrument from the power source before soldering.

The reliability and accuracy of this instrument can be maintained only if proper soldering techniques are used when repairing or replacing parts. General soldering techniques which apply to maintenance of any precision electronic equipment should be used when working on this instrument. Use only 60/40 rosin/core, electronic-grade solder. The choice of soldering iron is determined by the repair to be made.

CAUTION

Several of the circuit boards in the 7934 are multilayer type boards with a conductive path laminated between the top and bottom board layers. All soldering on these boards should be done with extreme care to prevent breaking connections to this center conductor. Only experienced maintenance personnel should attempt repair of the following boards: Main Interface, Logic, Trigger Selector, Vertical Interface, Control Rectifier, Readout, and Storage circuit board.

When soldering on circuit boards or small wiring, use only a 15-watt, pencil-type soldering iron. A higher wattage soldering iron may cause the etched circuit wiring to separate from the board base material and melt the insulation from small wiring. Always keep the soldering-iron tip properly tinned to ensure the best heat transfer to the solder joint. Apply only enough heat to remove the component or to make a good solder joint. To protect heat-sensitive components, hold the component lead with a pair of long-nose pliers between the component body and the solder joint. Use a solder-removing wick to remove excess solder from connections or to clean circuit board pads.

The following technique should be used to replace a component on any of the circuit boards not mentioned in the preceding Caution. Most components can be replaced without removing the board(s) from the instrument.

1. Touch the soldering iron to the lead at the solder connection. Never place the iron directly on the board, as this may damage the board.

http://manoman.sqhill.com

2. Melt a small amount of solder onto the component lead connection. This replaces the flux, which may have been removed during instrument cleaning, and facilitates removal of the component.

3. Grip the component lead with a pair of long-nose pliers. When the solder begins to flow, gently pull the component lead from the board. If unable to separate the lead from the board, try removing the other end of the component.

NOTE

Some components are difficult to remove from the circuit boards due to a bend placed in each lead during machine insertion of the component. The purpose of the bent leads is to hold the component in position during a flow-solder manufacturing process which solders all components at once. To make removal of machine inserted components easier, straighten the leads of the component on the back of the circuit board, using a small screwdriver or pliers, while heating the soldered connection.

4. Bend the leads of the replacement component to fit the holes in the circuit board. If the component is replaced while the board is mounted in the instrument, cut the leads so they will just protrude through the board. Insert the leads into the holes in the board so that the component is firmly seated against the board, or as originally positioned.

5. Touch the iron to the connection and apply enough solder to make a firm solder joint.

6. Cut off any excess lead protruding through the board (if not clipped in step 4).

7. Clean the area around the solder connection with a flux-removing solvent. Be careful not to remove information printed on the circuit board.

COMPONENT REMOVAL AND REPLACEMENT

WARNING

To avoid electric-shock hazard, always disconnect the instrument from the power source before removing or replacing components or plug-in units.

The exploded-view drawings associated with the Replaceable Mechanical Parts list (located at the rear of this manual) may be helpful in the removal or disassembly of individual components or sub-assemblies.

Display Unit Kickstand

The Display Unit of the 7934 Storage Oscilloscope is equipped with a kickstand to ease access to internal components of the instrument (see Figure 5-9). To use the kickstand, disconnect the power-cord plug from the power source. Then remove the side panels as described under Cabinet Panel Removal. Remove the two screws on each side of the 7934 which connect the two units. This allows the upper portion of the frame coupling to be pivoted outward. The Display Unit and Acquisition Unit of the 7934 can now be separated at the front of the instrument; the kickstand holds the units apart.

To completely separate the two units, first disconnect all cables between the two units. Then remove the two clamp brackets at the rear of the frame-coupling channel. Snap the ends of the kickstand out of its brackets (it may be necessary to drop the kickstand slightly) and then separate the units.

To assemble the units, reverse the disassembly procedure.

Power-Supply Unit Removal

The power-supply unit can be slid out of the rear of the 7934 to gain better access to the Logic board, Trigger Selector board, LV Regulator board, or for power-supply maintenance and troubleshooting. To remove the power-supply unit from the mainframe, first remove the four screws which hold the power-supply unit to the rear frame of the instrument (see Figure 5-10). Slide the power-supply unit out of the mainframe until it can be set down on the work surface (be sure to guide the interconnecting cables so they do not catch on other parts of the instrument). The power-supply unit remains electrically connected to the rest of the instrument in this position, allowing for troubleshooting. If it is necessary to operate this instrument with the power-supply unit removed for a period of time, we recommend that the power-supply unit be secured to the instrument with long screws and spacers between the rear frame and the power-supply unit.

Reverse the above procedure when installing the power-supply unit into the mainframe of the instrument; be careful not to pinch the interconnecting cables when replacing the unit. Be sure that all securing screws are tight enough to hold the power-supply unit in place.

http://manoman.sqhill.com

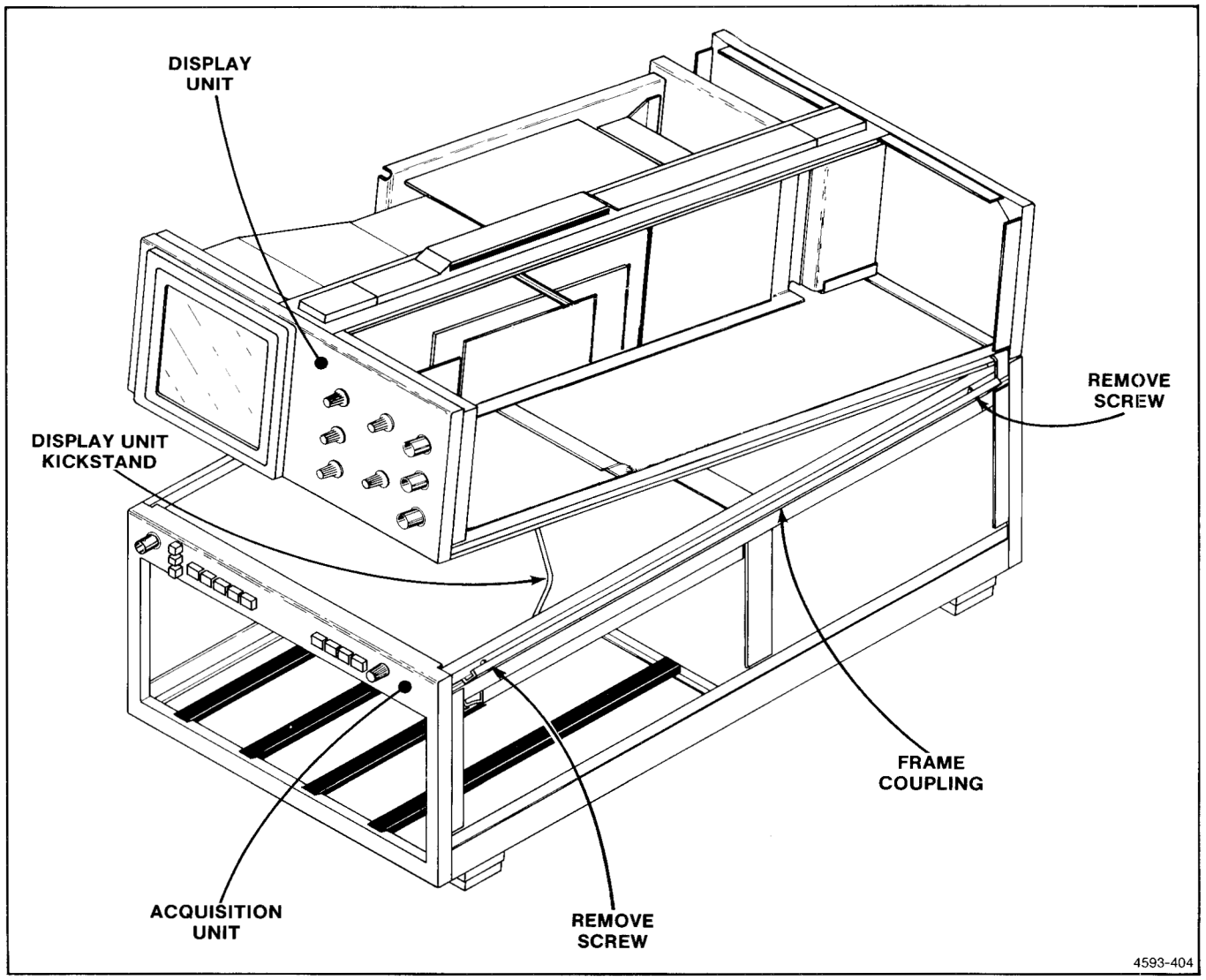

Figure 5-9. Use of kickstand to gain access to interior of the 7934.

Access to Components in the Power-Supply Unit

To reach components located inside the power-supply unit for maintenance or repair, use the following procedure:

WARNING

Disconnect the instrument from the power source and allow the line storage capacitors to discharge before removing the power-unit cover. The line storage capacitors remain charged with high voltage dc for several minutes after the line power is disconnected unless they are manually discharged. A warning-indicator neon bulb, located on the Power-Supply Inverter board, flashes when this stored voltage exceeds about 80 volts. Do not remove the power-unit cover while this light is flashing.

1. Slide out the power unit as previously described.

2. Remove the four small screws that secure the cover to the rear heatsink.

3. Remove the nine screws that attach the sides of the cover to the power unit chassis.

http://manoman.sqhill.com

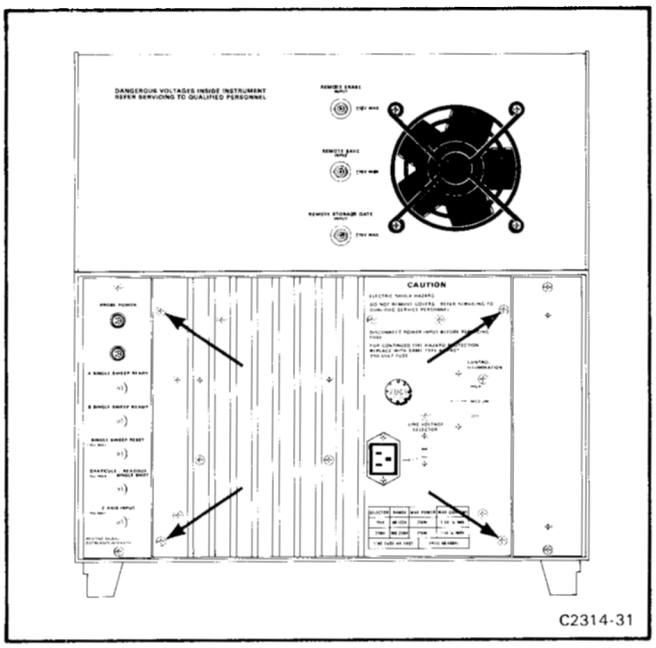

Figure 5-10. Power-supply unit securing screws.

4. Disconnect the two coaxial connectors from P40 on the Control Rectifier board (see Figure 8-16).

5. Remove the cover from the power-supply unit.

6. The power-supply unit is now open for maintenance or repair. If the 7934 is to be operated with the cover removed, first reconnect the coaxial cables to P40 on the Control Rectifier board.

7. Reverse the order of removal to replace the power-unit cover.

Before performing maintenance or taking resistance measurements in the power-supply unit, manually discharge the line storage capacitors (C16 and C17) as follows:

1. Remove the protective cover from the power-supply unit following the above procedure.

2. Apply a 1.5 kilohm, 2-watt, insulated resistor across the capacitor screws as indicated in Figure 5-11.

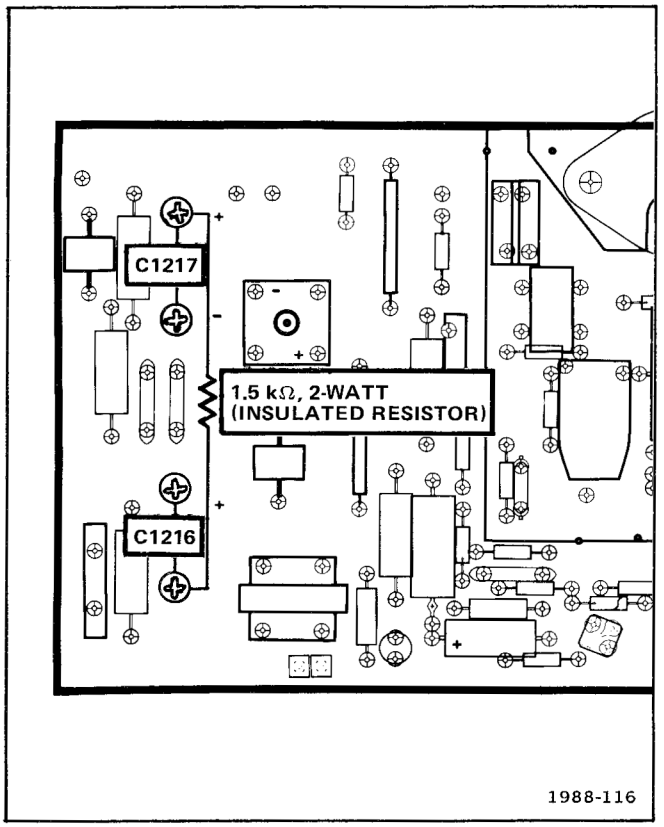

Figure 5-11. Location of line storage capacitor screws used to manually discharge C16 and C17.

Cathode-Ray Tube Removal

Remove the cathode-ray tube (crt) as follows:

WARNING

The crt may retain a dangerous electrical charge. Before removing the crt, the anode must be fully discharged by shorting the anode lead from the crt to the chassis. Wait approximately ten minutes and again firmly short this lead to the chassis. Then remove the crt. After removal, short the anode lead to the silvered patch on the funnel portion of the crt just prior to further handling.

http://manoman.sqhill.com

WARNING

Use care when handling a crt. Breakage of the crt causes a high-velocity scattering of glass fragments (implosion). Protective clothing and safety glasses should be worn. Avoid striking the crt on any object which might cause it to crack or implode. When storing a crt, place it in a protective carton or set it face down in a protected location on a smooth surface with a soft mat under the faceplate.

1. Remove the crt base-pin socket from the rear of the crt.

2. Loosen the two screws located above and below the crt base pins until the tension of the springs on these screws is released. Then, press in on the screws to be certain that the crt clamp inside the crt shield is loose.

3. Disconnect the four vertical deflection-plate connectors from the left side of the crt.

4. Disconnect the two horizontal deflection-plate connectors and the geometry connector from the top of the crt.

5. Disconnect the cables from P2976 and P3068 on the Storage board (see Figure 8-29), and the Y-Axis coil cable from P2443 on the Storage Mode Switch board (see Figure 8-27). Note the location and dress of the cables so they can be correctly replaced.

6. Disconnect the crt anode lead from the jack located at the high-voltage box on the right of the instrument. Ground this lead to the chassis to dissipate any stored charge remaining in the crt.

7. Remove the plastic mask which covers the crt bezel.

8. Remove the two screws and the metal tabs securing the light filter to the crt bezel. Remove the light filter and frame.

9. Remove the two remaining screws securing the crt bezel to the front panel. Remove the bezel while disconnecting the three-pin connector from the left rear of the bezel.

10. Remove the plastic face-plate protector, the graticule light assembly, and black crt face-plate mask. (The graticule light assembly need not be unsoldered from its leads.)

11. Hold one hand on the crt face-plate and gently push forward on the crt base with the other. Slowly pull the crt out from the front of the instrument while guiding the storage and Y-Axis coil cables, and the crt anode lead, through the holes in the crt shield.

Cathode-Ray Tube Replacement

Replace the cathode-ray tube (crt) as follows:

1. Insert the crt into the shield, guiding the crt anode plug and the storage and Y-Axis coil cables through the holes in the crt shield. Set the crt firmly against the cushions mounted at each corner of the face-plate.

2. Clean the crt face-plate, plastic face-plate protector, and the light filter with denatured alcohol.

3. Place the black crt mask over the face-plate. Reconnect the multi-pin connector to the crt bezel (align the arrow on the connector with the arrow on the bezel).

4. Hold the face-plate protector in position and replace the crt bezel, graticule light assembly, light filter frame, and light filter. Firmly tighten the four screws making sure that the two metal clips securely hold the light filter.

5. Gently push forward on the crt base to ascertain that the crt is as far forward as possible. Then tighten the two screws beside the crt base until the springs on the screws are fully compressed.

6. Place the crt base-pin socket onto the crt base pins.

7. Reconnect the crt anode plug.

8. Carefully reconnect all cables and crt neck-pin connectors.

9. Replace the plastic crt bezel mask.

NOTE

Replacement of the crt will require that the instrument be re-adjusted. Refer to Section 6, Checks and Adjustments.

http://manoman.sqhill.com

Circuit Board Replacement

If a circuit board is damaged beyond repair, replace the entire board assembly. Part numbers are given in Section 7, Replaceable Electrical Parts, for the completely wired boards.

Most of the circuit boards in this instrument are mounted on the chassis; pin connectors are used for electrical interconnection with chassis-mounted components and other circuit boards. Several boards plug onto the front and rear of the Main Interface board; feed-thru connectors connect these plug-on boards to the Main Interface board.

NOTE

When removing wires from a circuit board, tag the wires and the corresponding connection point on the circuit board.

Main Interface Plug-on Boards. Remove and replace the Main Interface plug-on boards (Logic, Trigger Selector, Vertical Interface, and Horizontal Interface) as follows:

1. Remove the plug-in units or the power-supply unit (see Power-Supply Unit Removal) as necessary to gain access to the boards mounted on the front or rear of the Main Interface board.

2. Disconnect any end-lead coaxial connectors located on the front of the Main Interface board, or those which pass across a portion of the board. Note the location so they can be correctly replaced.

3. Loosen all of the board's securing screws.

4. Keeping the board parallel to the Main Interface board, gently pull out on the edge of the board until the feed-thru terminals are cleared.

5. To replace a plug-on circuit board, position the board parallel to the Main Interface board so that all feed-thru pins are properly aligned with their sockets.

6. Gently press the circuit board against the mounting surface. Be sure that all feed-thru pins and sockets mate properly.

7. Uniformly tighten the securing screws (recommended torque: four to six inch-pounds).

8. Replace any connectors. Correct location is shown on the circuit board illustrations in Section 8, Diagrams and Circuit Board Illustrations.

Main Interface Circuit Board. Remove and replace the Main Interface circuit board as follows:

1. Remove the plug-in units and the power-supply unit (see Power-Supply Unit Removal).

2. Remove the three metal shields in front of the Main Interface board at the rear of the plug-in compartments.

3. Disconnect all multi-pin connectors and coaxial cables from the Main Interface board. Note the location of the connectors so they can be correctly replaced.

4. Remove the screws from inside each plug-in compartment which hold the plug-in interface connectors to the chassis (see Figure 5-12). Also remove the screws which hold the ground straps to the chassis.

5. Slide the Main Interface board assembly to the rear of the instrument and remove it.

6. Replace the Main Interface circuit board in the reverse order of removal. Match the index arrow on the pin connectors to the corresponding arrow on the board. Correct location of the pin connectors is shown on Figure 8-4.

Follower Circuit Boards. A follower circuit board with six interface contacts is used in each vertical interface connector (two left plug-in compartments) to provide optimum signal and trigger connections between the plug-in unit and the 7934. Each Follower board is held in place by a spring so that the board can move back and forth within the interface connector to compensate for length differences between plug-in units. If a contact on a Follower board is damaged, the entire board with contacts and interconnecting cables must be replaced as a unit.

Remove a Follower circuit board as follows:

1. Disconnect the instrument from the power source and remove the plug-in units.

2. Remove the power supply unit (see Power Supply Unit Removal).

http://manoman.sqhill.com

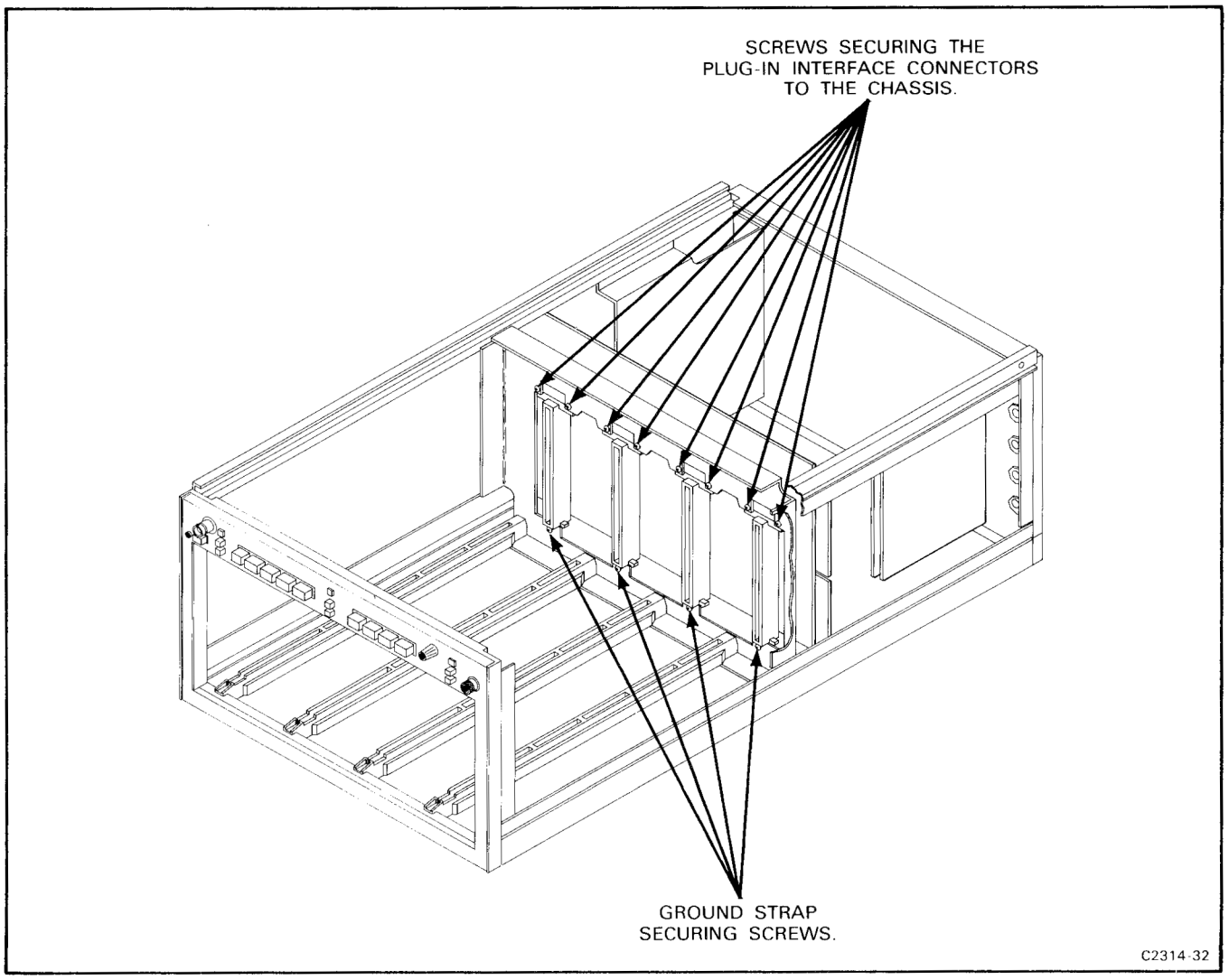

Figure 5-12. Location of securing screws for the Main Interface board.

3. Remove the metal shields in front of the Main Interface board at the rear of the plug-in compartments.

4. Disconnect the coaxial leads of the Follower board from the Vertical Interface and the Trigger Selector circuit boards. Note the location so they can be correctly replaced.

5. Using long-nose pliers, remove the spring from the Follower board.

6. Remove the Follower board with interconnecting cables from the rear of the interface connector, through the hole in the Main Interface board.

To replace a Follower circuit board, a folded length of thin shim stock as wide as the Follower board is required to compress the contacts while the board is inserted into the interface connector. Proceed as follows:

1. Hold the Follower board between the ends of the shim stock with the fold directly in front of the contacts. With the shim stock held against the sides of the board, the contacts on the sides of the board should be pressed together.

2. Insert the folded end of the shim stock (with the Follower board) into the rear of the interface connector through the hole in the Main Interface board. When the Follower board contacts are almost fully inserted into the connector, hold the board in place and remove the shim stock through the front of the interface connector while inserting the Follower board.

http://manoman.sqhill.com

3. Secure the Follower board with the spring.

4. Reconnect the Follower board coaxial leads to the Vertical Interface and Trigger Selector boards.

5. Replace the power supply unit.

6. Replace the metal shields at the rear of the plug-in compartments.

Mode Switch Circuit Board. Remove and replace the Mode Switch circuit board as follows:

CAUTION

Do not allow solder or solder flux to flow under circuit board switches. The circuit board is part of the switch contacts and intermittent operation can occur if contaminated.

1. Separate the Display Unit from the Acquisition Unit as described previously under Display Unit Kickstand.

2. Remove the VERT TRACE SEPARATION (B) knob.

3. Disconnect all multi-pin connectors from the Mode Switch board. Note the location so they can be correctly replaced.

4. Remove the four screws holding the board to the chassis.

5. Slide the board toward the rear of the instrument until the pushbuttons clear the front panel.

6. Lift the board from the instrument.

7. Replace the board by reversing the order of removal. Match the index arrow on the pin connectors to the corresponding arrow on the board. Correct location of the pin connectors is shown on the circuit board illustration in Section 8, Diagrams and Circuit Board Illustrations.

Storage Mode Switch Circuit Board. Remove and replace the Storage Mode Switch board as follows:

1. Disconnect all multi-pin connectors from the Storage Mode Switch board. Note the location so they can be correctly replaced.

2. Remove the two screws securing the board to the chassis.

3. Slide the board toward the rear of the instrument until the attached pushbuttons clear the front panel.

4. Remove the board from the instrument.

5. Replace the Storage Mode Switch board by reversing the order of removal. Match the index arrow on the connectors to the corresponding arrow on the board. Correct location of the pin connectors is shown on the Circuit Board illustration in Section 8, Diagrams and Circuit Board Illustrations.

Storage Control Circuit Board. Remove and replace the Storage Control Board as follows:

1. Disconnect all multi-pin connectors from the Storage Control board. Note the location so they can be correctly replaced.

2. Remove the MULTI TRACE DELAY, SAVE INTENSITY, PERSISTENCE, ERASE, and AUTO ERASE knobs (ERASE knob pulls off).

3. Remove the securing nuts on each of the above controls.

4. Slide the board toward the rear of the instrument until the control shafts clear the front panel.

5. Lift the board from the instrument.

6. Replace the Storage Control board by reversing the order of removal. Match the pin connectors to the corresponding arrow on the board. Correct location of the pin connectors is shown on the circuit board illustration in Section 8, Diagrams and Circuit Board Illustrations.

Signal Output Circuit Board. Remove and replace the Signal Output board as follows:

1. Remove the power supply unit (see Power Supply Unit Removal).

http://manoman.sqhill.com

2. Disconnect all multi-pin connectors and coaxial cables from the board. Note the location so they can be correctly replaced.

3. Using a vacuum-type desoldering tool, disconnect the BNC and probe power connectors from the board.

4. Remove the four screws securing the board to the chassis.

5. Replace the Signal Output board in the reverse order of removal. Match the index arrow on the pin connectors to the corresponding arrow on the board. Correct location of the pin connectors is shown on the circuit board illustration in Section 8, Diagrams and Circuit Board Illustrations.

Vertical Amplifier Circuit Board. Remove and replace the Vertical Amplifier board as follows:

1. Disconnect all multi-pin connectors and coaxial cables from the Vertical Amplifier board. Note the location so they can be correctly replaced.

2. Carefully disconnect the two vertical deflection-plate connectors from the side of the crt.

3. Remove the two bronze-colored screws from the front Hypcon connector.

4. Remove the four screws securing the board to the chassis.

5. Remove the board from the instrument.

6. Replace the Vertical Amplifier board by reversing the order of removal. Match the index arrow on the pin connectors to the corresponding arrow on the board. Correct location of the pin connectors is shown on the circuit board illustration in Section 8, Diagrams and Circuit Board Illustrations.

Horizontal Amplifier Circuit Board. Remove and replace the Horizontal Amplifier board as follows:

1. Disconnect all multi-pin connectors and coaxial cables from the Horizontal Amplifier board. Note the location so they can be correctly replaced.

2. Carefully disconnect the three connections to the Horizontal Amplifier board from the top of the crt.

3. Remove the four screws securing the board to the chassis.

4. Remove the board from the instrument.

5. Replace the Horizontal Amplifier board by reversing the order of removal. Match the index arrow on the pin connectors to the corresponding arrow on the board. Correct location of the pin connectors is shown on the circuit board illustration in Section 8, Diagrams and Circuit Board Illustrations.

Readout Circuit Board. Remove and replace the Readout board as follows:

1. Separate the Display Unit from the Acquisition Unit as described previously under Display Unit Kickstand.

2. Disconnect all multi-pin connectors and coaxial cables from the Readout board. Note the location so they can be correctly replaced.

3. Remove the four screws securing the board to the chassis.

4. Remove the board from the instrument.

5. Replace the Readout board by reversing the order of removal. Match the index arrow on the pin connectors to the corresponding arrow on the board. Correct location of the pin connectors is shown on the circuit board illustration in Section 8, Diagrams and Circuit Board Illustrations.

Storage Circuit Board. Remove and replace the Storage board as follows:

1. Remove the protective plastic shield from the upper right-hand corner of the Storage board by removing the plastic securing screw.

2. Disconnect all multi-pin connectors and coaxial cables from the Storage board. Note the location so they can be correctly replaced.

3. Remove the six screws securing the board to the chassis.

4. Slide the board toward the rear of the instrument until the attached front-panel pushbuttons clear the chassis. Remove the board from the instrument.

http://manoman.sqhill.com

5. Replace the Storage board by reversing the order of removal. Match the index arrow on the pin connectors to the corresponding arrow on the board. Correct location of the pin connectors is shown on the circuit board illustration in Section 8, Diagrams and Circuit Board Illustrations.

Intensity Control Circuit Board. Remove and replace the Intensity Control Board as follows:

1. Remove the Storage board as described above.

2. Disconnect all multi-pin connectors from the Intensity Control board. Note the location so they can be correctly replaced.

3. Remove the FOCUS, A INTENSITY, BEAMFINDER, B INTENSITY, READOUT, and GRAT ILLUM knobs (BEAMFINDER knob pulls off).

4. Remove the securing nuts on each of the above controls.

5. Slide the board toward the rear of the instrument until the control shafts clear the front panel.

6. Lift the board from the instrument.

7. Replace the Intensity Control board by reversing the order of removal. Match the pin connectors to the corresponding arrow on the board. Correct location of the pin connectors is shown on the circuit board illustration in Section 8, Diagrams and Circuit Board Illustrations.

Z-Axis Circuit Board. The Z-Axis board is located behind the fan housing at the rear of the Display Unit. Remove and replace the Z-Axis board as follows:

1. Remove the four screws which attach the fan cover to the rear of the Display Unit (two on each side).

2. Remove the two plastic screws securing the plastic cover to the board.

3. Disconnect all multi-pin connectors and coaxial cables from the Z-Axis board. Note the location so they can be correctly replaced.

4. Remove the four screws securing the board to the chassis.

5. Remove the board from the instrument.

6. Replace the Z-Axis board by reversing the order of removal. Match the index arrow on the pin connectors to the corresponding arrow on the board. Correct location of the pin connectors is shown on the circuit board illustration in Section 8, Diagrams and Circuit Board Illustrations.

Focus Circuit Board. The Focus board is located in the high-voltage box. Remove and replace the Focus board as follows:

1. Remove the four screws which attach the fan housing to the rear of the Display Unit (two on each side).

2. Remove the four screws securing the high-voltage protective cover to the chassis.

3. Disconnect all multi-pin connectors from the Focus board. Note the location so they can be correctly replaced.

4. Remove the four screws securing the Focus board to the chassis.

5. Lift the board from the instrument.

6. Replace the Focus board by reversing the order of removal. Match the index arrow on the pin connectors to the corresponding arrow on the board. Correct location of the pin connectors is shown on the circuit board illustration in Section 8, Diagrams and Circuit Board Illustrations.

High-Voltage Circuit Board. The High-Voltage board is located in the high-voltage box. Remove and replace the High-Voltage board as follows:

1. Remove the Focus board, as previously described, to gain access to the High-Voltage board.

2. Disconnect the multi-pin connectors from the High-Voltage board. Note the location so they can be correctly replaced.

3. Disconnect the crt anode lead. Ground the lead to the chassis to dissipate any stored charge remaining in the crt.

CAUTION

Do not touch any components with the crt anode lead until it is fully discharged.

http://manoman.sqhill.com

4. Remove the two screws securing the High-voltage board to the chassis.

5. Lift the board from the instrument.

6. To replace the High-voltage board, reverse the order of removal. Match the index arrow on the pin connectors to the arrow on the board. Correct location of the pin connectors is shown of the circuit board illustration in Section 8, Diagrams and Circuit Board Illustrations.

LV Regulator Circuit Board. Remove and replace the LV Regulator circuit board as follows:

1. Remove the power-supply unit (see Power-Supply Unit Removal).

2. Disconnect the multi-pin connectors from the LV Regulator board. Note the location so they can be correctly replaced.

NOTE

If the LV Regulator board is to be removed to allow access to other parts of the power-supply unit, proceed with steps 3 and 4 only. If the board is to be removed from the instrument, proceed with the remaining steps of the procedure.

3. Remove the two screws located in the access holes under the LV Regulator board. These screws secure the board to the chassis.

4. Remove the four screws securing the LV Regulator chassis to the rear heatsink. Then remove the two screws securing the LV Regulator chassis to the main power supply chassis (located in front of the LV Regulator board). Now remove the board with attached chassis.

5. Remove the mounting hardware securing the plastic-cased power transistors to the rear heatsink (see Fig. 5-13). Note the position of the lockwashers so they can be correctly replaced.

6. Remove the five securing screws and lift the board with attached power transistors from the chassis.

7. To replace the LV Regulator board, first apply a thin coat of silicone grease to the back (mounting surface) of each power transistor.

WARNING

Handle silicone grease with care. Avoid getting silicone grease in your eyes. Wash hands thoroughly after use.

8. Place the LV Regulator board on the chassis. Replace but do not tighten, the securing screws.

9. Check that the power transistors are aligned with their mounting screws and that the insulating washers are in place between the transistor cases and the rear heatsink.

10. Secure the transistors with the mounting hardware. Do not over-tighten the nuts; recommended torque is four to six inch-pounds.

11. Tighten the screws holding the LV Regulator board to the chassis.

12. Install the chassis on the power-supply unit.

13. Connect the multi-pin connectors to the LV Regulator board. Match the index arrow on the pin connectors to the corresponding arrow on the board. Correct location of the pin connectors is shown in the circuit board illustration in Section 8, Diagrams and Circuit Board Illustrations.

14. Replace the power-supply unit in the instrument.

Control Rectifier Circuit Board. An exploded-view drawing of the power-supply unit is given in Section 9, Replaceable Mechanical Parts, at the rear of this manual. To remove the Control Rectifier board, use the following procedure.

1. Remove the power-supply unit (see Power-Supply Unit Removal).

2. Remove the protective cover from the power-supply unit (see Access to Components in the Power-Supply Unit).

3. Remove the LV Regulator board with attached chassis as described previously.

4. Disconnect the multi-pin connectors from the Control Rectifier board. Note the location so they can be correctly replaced.

http://manoman.sqhill.com

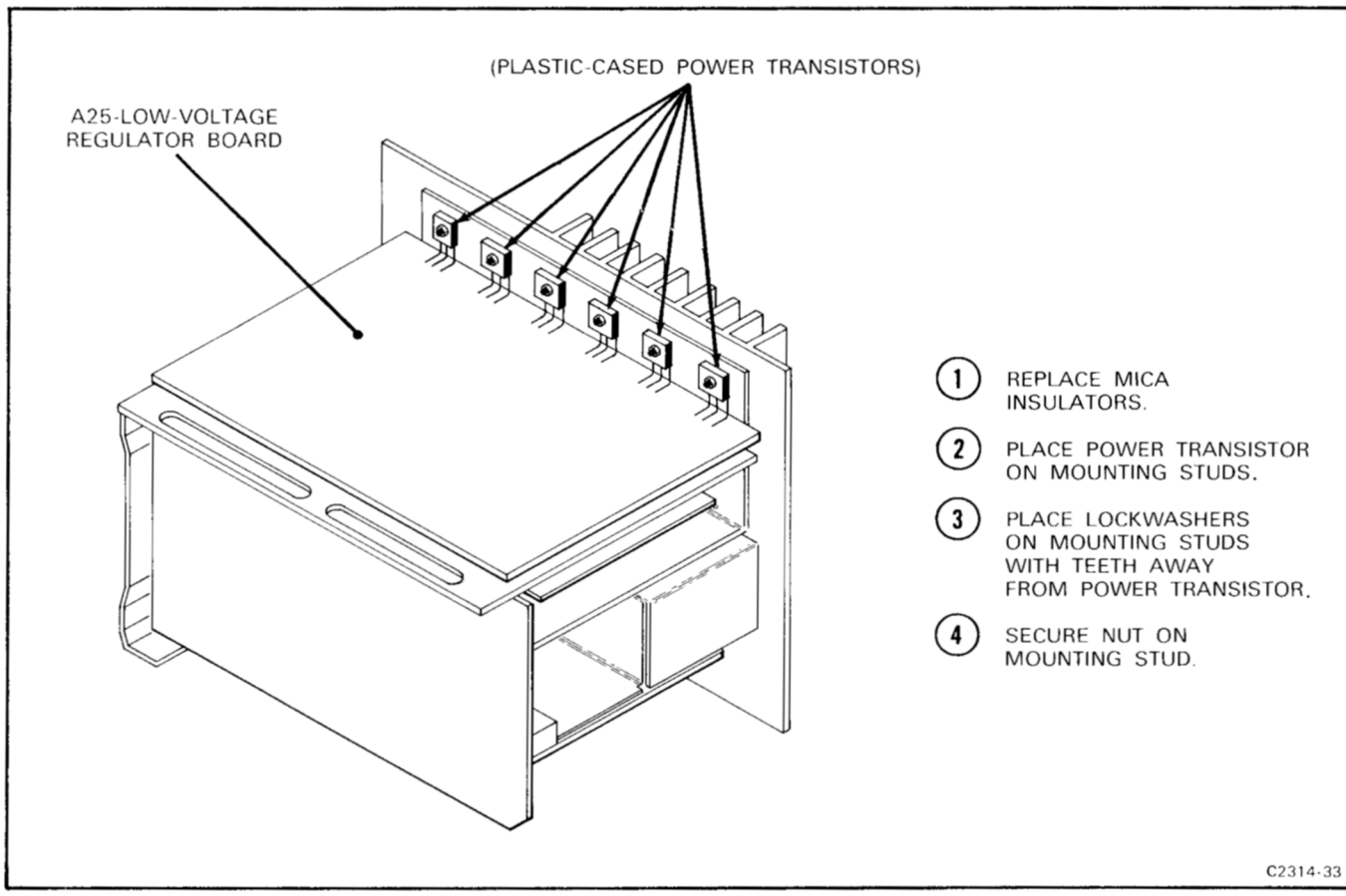

Figure 5-13. Correct placement of power transistor and mounting hardware on rear heatsink.

5. Remove the two plastic screws which hold the circuit-board shield to the Inverter Board.

6. Unsolder the three power-transformer leads from the Power-Supply Inverter board. Remove the excess solder from the board pads with a vacuum-type desoldering tool.

7. Remove the four screws securing the power transformer to the power-supply rear heatsink.

8. Remove the five securing screws from the Control Rectifier board.

9. Lift the Control Rectifier board and attached power transformer from the power-supply unit.

10. To replace the Control Rectifier board, reverse the order of removal. Match the index arrow on the pin connectors to the corresponding arrow on the board. Correct location of the pin connectors is shown on the circuit board illustration in Section 8, Diagrams and Circuit Board Illustrations.

Inverter Circuit Board. An exploded-view drawing of the power-supply unit is given in Section 9, Replaceable Mechanical Parts, at the rear of this manual. Remove and replace the Inverter board as follows:

WARNING

The power-supply unit has been tested at the factory to ensure safe operation. Improper repair of this unit can result in hazardous potentials on the instrument chassis. Do not remove the plate insulator, block insulator, or transistor shield from the heatsink. (See the exploded-view drawing of the power-supply unit for location of these components.)

http://manoman.sqhill.com

1. Remove the power-supply unit (see Power-Supply Unit Removal).

2. Remove the protective cover from the power-supply unit (see Access to Components in the Power-Supply Unit).

3. Remove the Control Rectifier board as described previously.

4. Remove the five securing screws from the Inverter board.

5. Unsolder the line-input leads from the Inverter board. Remove any excess solder from these circuit board pads with a vacuum-type desoldering tool.

6. Remove the two power transistors by removing the securing nuts and pulling the transistors from the ceramic heatsinks.

7. Remove the Inverter board from the power-supply unit.

8. To replace the Inverter board, reverse the order of removal. Match the index arrow on the pin connectors to the corresponding arrow on the board. Correct location of the pin connectors is shown on the circuit board illustration in Section 8, Diagrams and Circuit Board Illustrations.

Plug-In Interface Connectors

Individual contacts of the plug-in interface connectors can be replaced. However, we recommend replacing the entire Main Interface board if a large number of contacts are damaged. An alternative solution is to refer the maintenance of the damaged Main Interface board to your local Tektronix Field Office. Use the following procedure to remove and replace an individual contact of the plug-in interface connectors:

NOTE

The plug-in interface contacts which are mounted on the Follower circuit boards cannot be replaced. A Follower board with contacts and interconnecting cables is replaced as a unit. See Follower Circuit Boards under Circuit Board Replacement earlier in this section.

1. Remove the Main Interface board from the instrument as described previously.

2. Snap the white plastic connector cover off the side of the damaged plug-in interface connector.

3. Unsolder and remove the damaged contact.

4. Install the replacement contact. Carefully position it to fit against the connector body.

5. Snap the white plastic connector cover back onto the plug-in interface connector. Check that the replaced contact is aligned with the other contacts.

6. Replace the Main Interface board.

Delay Line Repair

The vertical delay line is carefully assembled and matched to the instrument at the factory. Therefore, it is not recommended that repair be attempted. Instead, contact your local Tektronix Service Center.

Semiconductors

Semiconductors should not be replaced unless actually defective. If removed from their sockets during routine maintenance, return them to their original sockets. Unnecessary replacement of semiconductors may affect the adjustment of the instrument. When semiconductors are replaced, check the operation of circuits which may be affected.

WARNING

To avoid electric-shock hazard, always disconnect the 7934 from the power source before removing or replacing components.

Replacement semiconductors should be of the original type or a direct replacement. Lead configurations of the semiconductors used in this instrument are shown in Figure 5-2. Some plastic case transistors have lead configurations which do not agree with those shown. If a replacement transistor is made by a different manufacturer than the original, check the manufacturer's basing diagram for correct basing. All transistor sockets in this instrument are wired for standard basing as used for metal-cased transistors.

When removing soldered-on transistors use a solder-removing wick to remove the solder from the circuit board pads (see Soldering Techniques in this section). Transistors which have heat radiators or are mounted on the chassis

http://manoman.sqhill.com

use silicone grease to increase heat transfer. Replace the silicone grease on both sides of the insulating washer when replacing these transistors.

WARNING

Handle silicone grease with care. Avoid getting silicone grease in your eyes. Wash hands thoroughly after use.

To replace one of the power transistors mounted on the heatsink at the rear of the power-supply unit, first remove the mounting hardware. Then, unsolder and remove the defective transistor. When replacing the transistor, be sure to install the insulating washer between the transistor and the heatsink (use silicone grease as previously described). Tighten the mounting nut just tight enough to hold the transistor in place. Then solder the replacement transistor to the LV Regulator board.

An extracting tool should be used to remove the in-line integrated circuits to prevent damaging the pins. This tool is available from Tektronix, Inc.; order Tektronix Part 003-0619-00. If an extracting tool is not available, use care to avoid damaging the pins. Pull slowly and evenly on both ends of the integrated circuit. Try to avoid disengaging one end from the socket before the other end.

Hypcon Connectors

The Hypcon (hybrid-printed connector) is a precision-made connector designed to provide low-loss electrical and thermally efficient connection between the circuit board and hybrid integrated circuits. An exploded view of the Hypcon connector is shown in Figure 5-14. Care must be taken when replacing the hybrid ICs not to touch the elastomer gold-plated contacts with your fingers or to use a cleaner which might degrade contact reliability. If it becomes necessary to use a cleaning solvent near the connector when replacing adjacent circuit board components (within 1/2 inch), the Hypcon connector and hybrid IC should be removed.

IMPORTANT

Remove all traces of solder flux or foreign material contamination from the circuit board contact area before replacing the connector. Contamination usually occurs during the soldering and cleaning process. Even when soldering is done carefully, flux, oil, or other contaminants can be carried under the connector during the cleaning operation. When the solvent evaporates, nonconductive contaminants may remain on or near the contact interfaces.

The cleaning process (either hand cleaning with a solvent or machine cleaning in an automatic detergent wash) is not recommended for boards containing Hypcon connectors.

If a component adjacent to a Hypcon connector must be replaced, the following steps are recommended:

1. Remove the hybrid IC and Hypcon connector (see disassembly and removal instructions in Figure 5-14) before any soldering or cleaning and store in a dirt-free covered container. When several hybrids and Hypcon connectors are removed, keep parts together and replace as sets; do not interchange parts.

2. When hand soldering:
   a. Use small diameter solder (0.030 to 0.040 inch).
   b. Use low wattage soldering iron (15 to 20 watts).
   c. Use care with solder amount and placement.

3. Remove solder flux and contact contamination with isopropyl alcohol, denatured ethyl alcohol, or a Freon TF cleaner such as Spray-On #2002.

4. Flush the hybrid and Hypcon connector mounting area with isopropyl alcohol. Do not scrub with a cotton-tipped applicator as cotton fibers may adhere to edges and surfaces of contact areas and cause open or intermittent connections. The elastomer should be examined under light for dust, hair, etc., before it is re-installed. If the etched circuit board surfaces require more cleaning, scrub with a soft rubber eraser and blow or vacuum clean while dusting the surface with a small cleaning brush.

5. If the hybrid IC and elastomer contact holder are contaminated, clean by flushing or spraying with alcohol and oven dry at 50°C. Do not scrub with a cotton-tipped applicator or similar device. If the contact holder is excessively contaminated, replace with a new one.

Two inch-pounds of torque should be applied to the mounting screws to secure the Hypcon to the circuit board.

http://manoman.sqhill.com

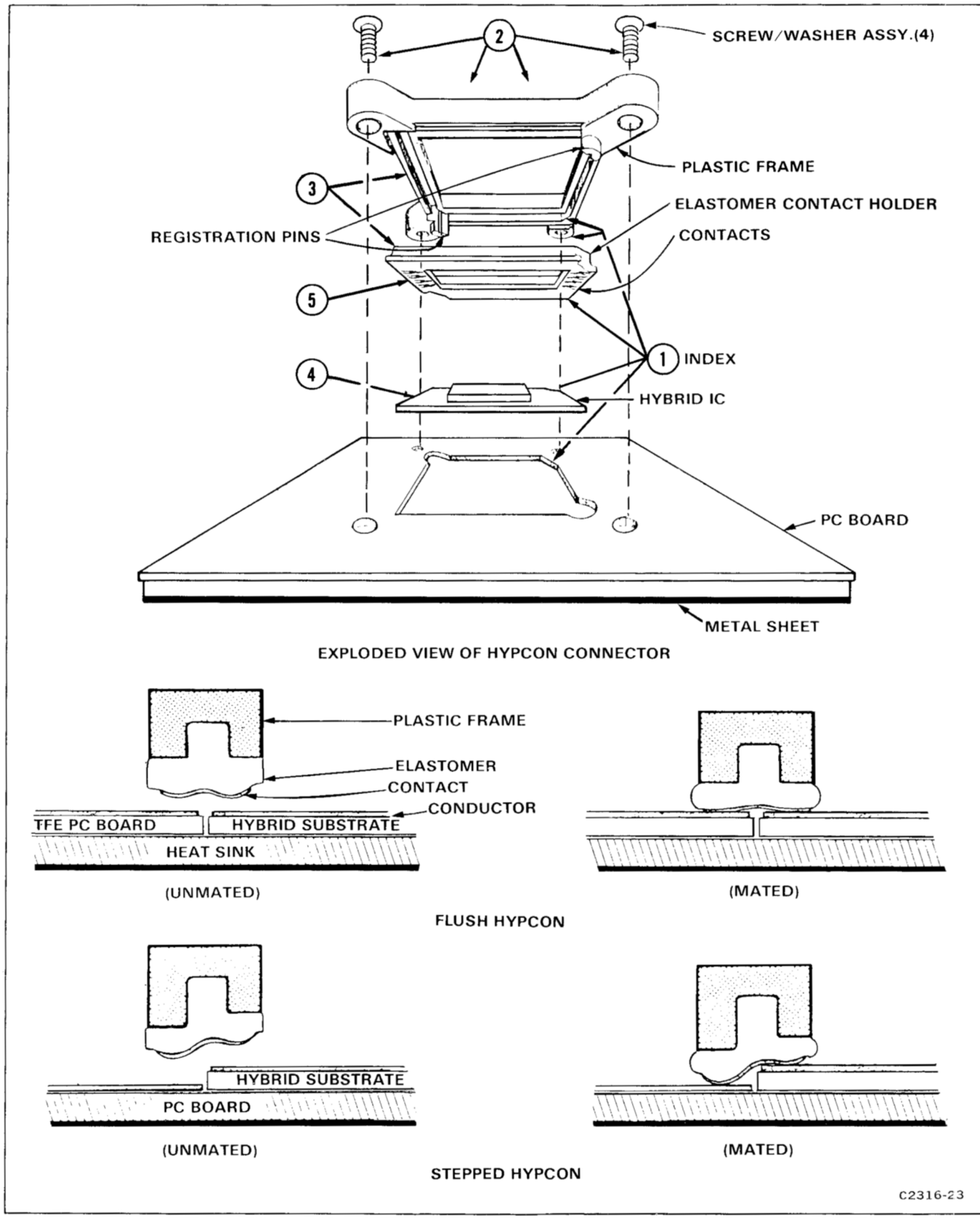

Figure 5-14a. Hypcon assembly removal and replacement.

http://manoman.sqhill.com

DISASSEMBLY AND REMOVAL

1. Note index on circuit board (arrow, triangle, or dot) and HYPCON plastic frame (pointed mounting ear).

2. Unscrew and remove the 4 screw/washer assemblies. Where the HYPCON connector serves to heatsink the hybrid to the chassis, 2 of the 4 screws are longer. Note the location of the yellow tinted screws for proper replacement.

3. Lift HYPCON connector from board.

4. Note index location of hybrid and remove from board with tweezers.

5. Note index location of elastomer contact holder and remove by grasping a corner of the contact holder with tweezers and lifting up. Do not touch the gold-plated contacts with your fingers.

REASSEMBLY AND REPLACEMENT

Grasp corner of elastomer contact holder with tweezers and place in plastic frame slot being careful to match the flat contact holder with the flat frame corner. Place a clean plastic envelope over finger and press with finger to seat contact holder into the frame. The contact holder must be evenly seated on all four sides.

Flush HYPCON: Match hybrid flat corner with board receptable flat corner and place hybrid in receptable. Match pointed mounting ear of HYPCON connector with flat corner of receptacle and guide registration pins into the board hold.

Stepped HYPCON: Using tweezers, match the hybrid corner index with the elastomer contact holder index and insert between the registration pins. Turn the assembly over, grasp the hybrid "hat" with the tweezers, and guide the registration pins into the board holes. Match the plastic frame pointed mounting ear with the circuit board arrow.

Insert mounting hardware and apply 2 inch-pounds of torque to secure the connector assembly.

Figure 5-14b. Hypcon assembly removal and replacement.

http://manoman.sqhill.com

Make sure that the elastomer is properly seated in the contact holder before remounting the assembly to the circuit board. Exercise care when mounting the frame, elastomer contact holder, and hybrid IC assembly to the circuit board to prevent misalignment between the connector and board.

CAUTION

Because of the close tolerances involved, special care must be taken to assure correct index alignment of each Hypcon part during reassembly. Failure to do so can result in a cracked hybrid substrate. See Figure 5-14 for index locations.

If your instrument contains both the flush and stepped type of Hypcon connectors, be careful not to mix the elastomer contact holders during reassembly. The flush Hypcon connectors have green elastomer contact holders and the plastic frame is marked FLUSH. The stepped Hypcons have neutral-colored elastomer contact holders with a slight ridge or step on the contact surface; the large frames are marked STEPPED. The registration pins on the stepped plastic frame are slightly longer than those on the flush frame. The elastomer contact holder in the small stepped connectors is indexed differently than the large connectors. Look for a small gold arrow in one corner of the holder instead of a flat corner. Match this corner arrow with the pointed corner of the plastic frame. Give close attention to this indexing as it is easy to insert the elastomer contact holder incorrectly.

Differences also exist between the large flush and large stepped Hypcon circuit board receptacles. Figure 5-14 shows the cross-sectional differences which must be observed when working with an instrument that contains both types of Hypcon connectors.

CAUTION

Damage to the elastomer contact holder can result if the connectors are not mated properly with the board receptacle.

When replacing the hybrid, insert it into the board opening and then position the Hypcon connector in the board registration holes for perfect alignment. The outer portion of the Hypcon frame should be flush with the circuit board before the four mounting screws are tightened. Avoid touching the hybrid and elastomer contact holder with your fingers; finger oils can degrade reliability.

A procedure for removal and replacement of the Hypcon assembly is included in Figure 5-14.

Hybrid substrate contact numbers 1 and 20 are printed on the substrate at the index corner. See Figure 5-2, Semiconductor Lead Configurations.

Interconnecting Pins

Two methods of interconnection are used in this instrument to electrically connect the circuit boards with other boards and components. When the interconnection is made with a coaxial cable a special end-lead connector plugs into a socket on the board. Other interconnections are made with a pin soldered into the board. Two types of mating connectors are used for these interconnecting pins. If the mating connector is mounted on a plug-on circuit board, a special socket is soldered into the board. If the mating connector is on the end of a lead, an end-lead pin connector is used which mates with the interconnecting pin. The following information provides the removal and replacement for the various types of interconnecting methods.

Coaxial-Type End-Lead Connectors. Replacement of the coaxial-type end-lead connectors requires special tools and techniques; only experienced maintenance personnel should attempt to remove or replace these connectors. We recommend that the damaged cable or wiring harness be replaced as a unit. For cable or wiring harness part numbers, see Section 9, Replaceable Mechanical Parts. An alternative solution is to refer the replacement of the defective connector to your local Tektronix Service Center. Figure 5-15 gives an exploded view of a coaxial end-lead connector assembly.

Circuit-Board Pins. A circuit-board pin replacement kit (including necessary tools, instructions, and replacement pins with attached ferrules) is available from Tektronix, Inc. Order Tektronix Part 040-0542-00. Replacing circuit-board pins on multi-layer boards is not recommended. (The multi-layer boards in this instrument are listed under Soldering Techniques in this section.)

To replace a damaged pin, first disconnect any multi-pin connectors. Then unsolder the damaged pin and pull it from the board with a pair of pliers, leaving the ferrule (see Figure 5-16) in the circuit board if possible. If the ferrule remains in the circuit board, remove the spare ferrule from the replacement pin and press the new pin into the hole in the circuit board. If the ferrule is removed with the damaged pin, clean out the hole using a solder-removing wick and a scribe. Then press the replacement pin, with attached spare ferrule, into the circuit board. Position the replacement pin in the same manner as the original. Solder the pin to both sides of the circuit board. If the original pin was bent at an angle to mate with a connector, carefully bend the new pin to the same angle. Replace the multi-pin connector.

http://manoman.sqhill.com

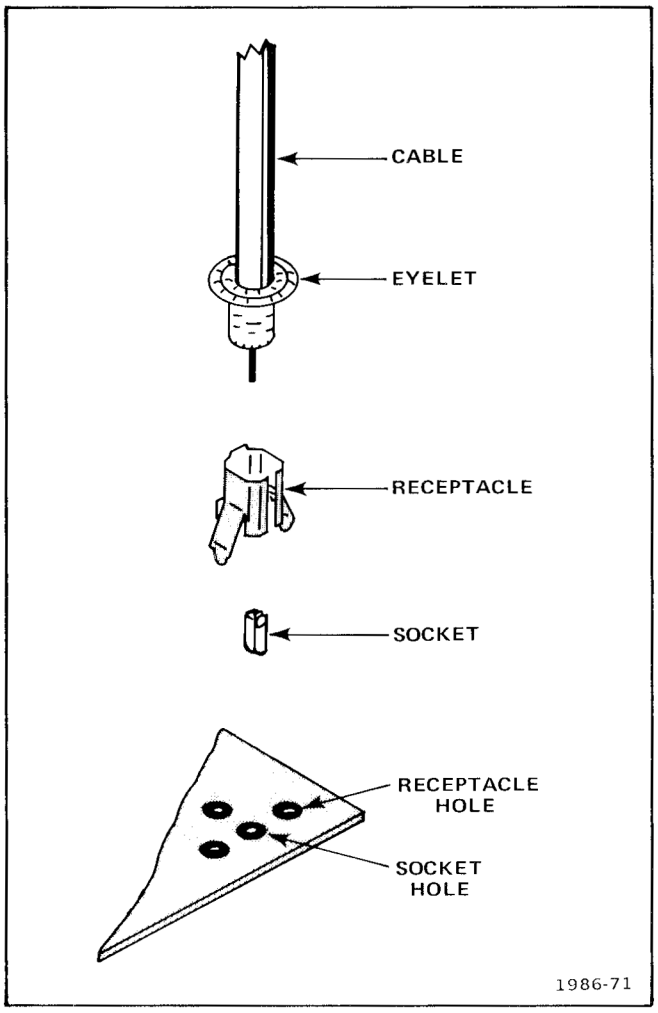

Figure 5-15. Coaxial end-lead connector assembly.

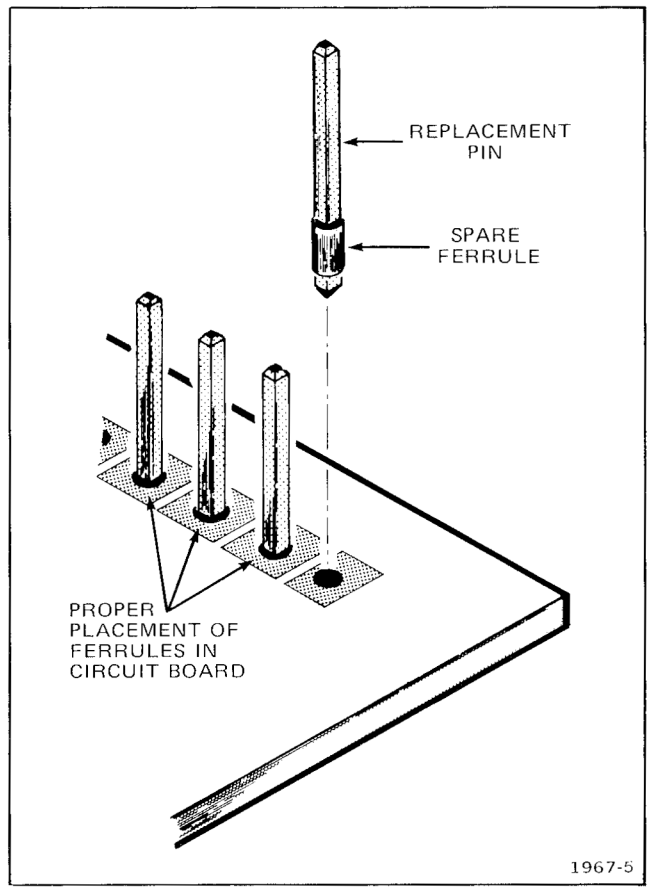

Figure 5-16. Exploded view of circuit-board pin and ferrule.

Circuit-Board Pin Sockets. The pin sockets on the circuit boards are soldered to the back of the board. To remove or replace one of these sockets, first unsolder the pin (use a vacuum-type desoldering tool to remove excess solder). Then straighten the tabs on the socket and remove the socket from the board. Place the new socket in the circuit board hole and press the tabs down against the board. Solder the tabs of the socket to the circuit board; be careful not to get solder inside the socket.

CAUTION

The spring tension of the pin sockets ensures a good connection between the circuit board and the pin. This spring tension can be destroyed by using the pin sockets as a connecting point for spring-loaded probe tips, alligator clips, etc.

Multi-Pin Connectors. The multi-pin connectors used to connect wires to the interconnecting pins are clamped to the end of the associated leads. To remove or replace damaged multi-pin connectors, remove the old pin connector from the end of the lead and clamp the replacement connector to the lead. Some of the pin connectors are grouped together and mounted in a plastic holder; the overall result is that these connectors are removed and installed as a multi-pin connector (see Troubleshooting Aids). If the individual multi-pin connectors are removed from the plastic holder, note the order of the individual wires for correct replacement in the holder.

Pushbutton Switches

The pushbutton switches used in the 7934 Storage Oscilloscope are circuit board mounted. First remove the associated circuit board following the procedure given under Circuit Boards in this section. Figure 5-17 gives removal and replacement instructions for the pushbutton switches.

http://manoman.sqhill.com

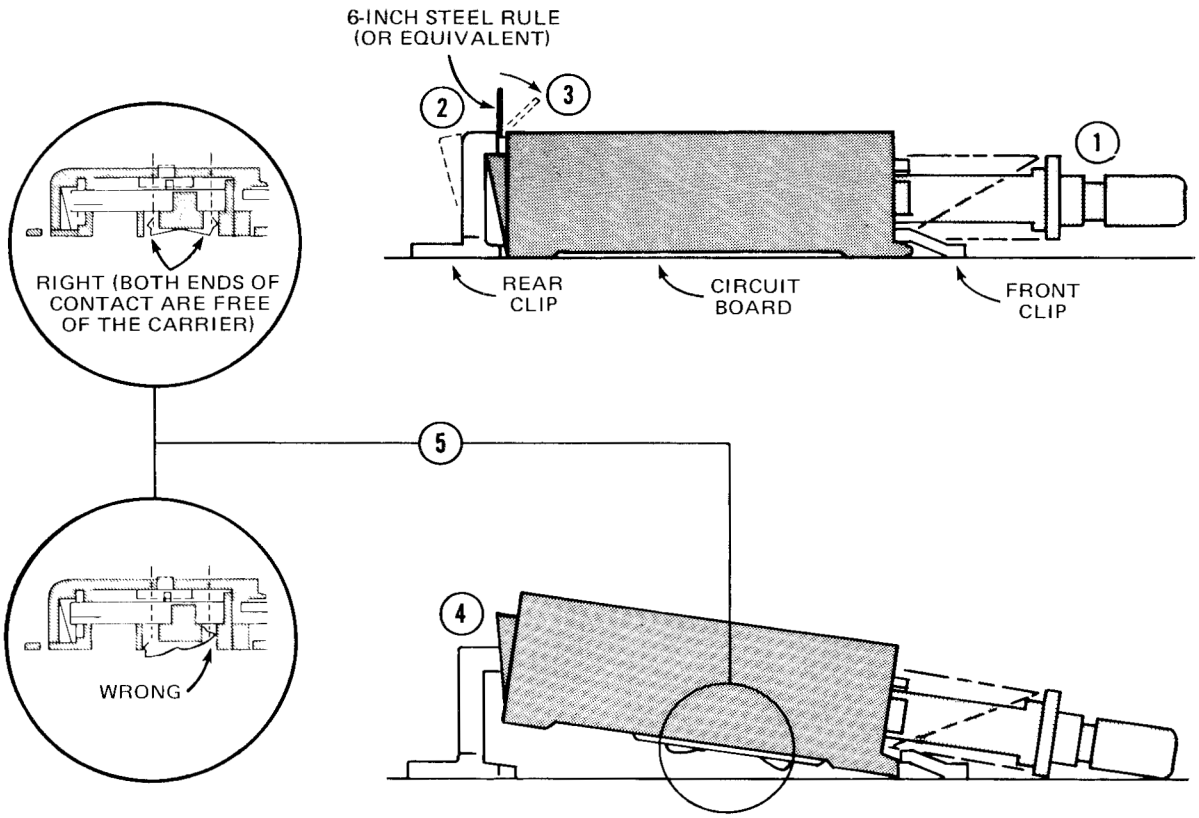

(1) Make sure that all switch shafts are in the OUT position to clear the rear clip.

(2) Place the long edge of a six-inch rule or similar thin straight edge between the top edge of the rear clip and the switch body.

(3) Carefully pry the rear clip back just far enough to push the steel rule down between the clip and switch body.

CAUTION

When the switch is removed, the contacts may drop free and be damaged or lost. Body salts or acids can contaminate the switch contacts. Wear cotton gloves to prevent touching the contacts in the switch or on the board with bare hands.

(4) Pull the rear of the switch up, remove the steel rule, and pull the switch out of the front clip.

(5) To replace the switch, first check that the slide contacts are properly installed in the carrier. Then, place the front of the switch into the front clip and push the rear of the switch down until the rear clip catches and holds the switch in place.

1967-3

Figure 5-17. Removal procedure for pushbutton switches.

http://manoman.sqhill.com

Graticule Light Bulbs

To remove or replace the graticule light bulbs, first remove the plastic crt mask, light filter, and metal light shield. Pull on the white tabs to remove the graticule lamp assembly. Unsolder the base of the damaged bulb from the circuit board and pull the bulb out of the circuit board. Reverse the order of removal for replacement.

Power Transformer

Replace the power transformer only with a direct replacement Tektronix transformer. Remove and replace the power transformer as follows:

1. Remove the Control Rectifier board as described under Circuit Board Removal in this section.

2. Unsolder the transformer leads from the Control Rectifier board. Remove the excess solder from the circuit-board pads (see Soldering Techniques). Note the position of the transformer leads so they can be correctly replaced.

3. Remove the bracket which holds the transformer to the rear heatsink.

4. Place the new transformer in position but do not solder the leads to the circuit-board pads.

5. Secure the bracket to the Control Rectifier board and attach the transformer to the bracket with the four securing screws.

6. Reposition the Control Rectifier board and secure with the three screws. Attach the bracket securely to the rear heatsink.

7. Solder the transformer leads to the circuit-board pads.

8. Finish replacing the Control Rectifier board.

Line Fuse

The line fuse is located on the rear panel of the power-supply unit. Replace only with a fuse of proper type and rating.

NOTE

The line fuse is used for both 110 and 220 volt operation. No change in the fuse is necessary when switching the LINE VOLTAGE SELECTOR switch between 110 volts and 220 volts.

ADJUSTMENT AFTER REPAIR

After any electrical component has been replaced, the adjustment of that particular circuit should be checked, as well as the adjustment of any closely related circuits. Since the low-voltage supplies affect all circuits, adjustment of the entire instrument should be checked if components have been replaced in these supplies or if the power transformer has been replaced. See Section 6, Checks and Adjustments, for a complete adjustment procedure.

http://manoman.sqhill.com

http://manoman.sqhill.com

CHECKS AND ADJUSTMENTS

This section contains information necessary to perform a complete instrument check and adjustment. Limits given in this procedure are adjustment guides and should not be interpreted as performance requirements unless preceded by a check mark (✓). Where possible, instrument performance is checked before an adjustment is made.

PRELIMINARY INFORMATION

Adjustment Interval

To maintain instrument accuracy, check the performance of the 7934 every 1000 hours of operation, or every 6 months if used infrequently. Before complete adjustment, thoroughly clean and inspect this instrument as outlined in Section 5, Maintenance.

Tektronix Field Service

Tektronix Field Service Centers and the Tektronix Factory Service Center provide instrument repair and adjustment services. Contact your Tektronix Field Office or representative for further information.

Using This Procedure

This Check and Adjustment procedure can be used for a complete adjustment procedure or as a check of the instrument's performance. Completion of each step in the procedure ensures that the instrument is correctly adjusted and operating within specified limits. Refer to the following discussion for instructions on a complete or partial check and adjustment.

Index. An index precedes the procedure to aid in locating individual steps in the Checks and Adjustments procedure.

Performance Check. Instrument performance can be checked by performing the complete Checks and Adjustments procedure and omitting only the ADJUST part of the steps. A check mark (✓) preceding a CHECK step indicates that the limit given is a performance requirement specified in the Specification tables in Section 1.

Adjustment. Completion of each step in the Checks and Adjustments procedure ensures that the instrument is correctly adjusted and performing within specified limits. Where possible, instrument performance is checked before an adjustment is made. For best overall performance when performing the complete adjustment procedure, make each adjustment to the exact setting indicated.

Partial Procedures. The following procedure is written to completely check and adjust the instrument to the Performance Requirements listed in the Specification tables, Section 1. If the application for which the instrument is used does not require the full available performance, the procedures and the required equipment list can be shortened accordingly.

A partial performance check and adjustment may be desirable after replacing components, or to touch up the adjustment of a portion of the instrument. To check or adjust only part of the instrument, refer to the Equipment Required list which precedes the portion of the procedure you want to perform. To avoid unnecessary adjustment of other parts of the instrument, adjust only if the tolerance given in each CHECK is not met.

TEST EQUIPMENT REQUIRED

The test equipment listed in Table 6-1 is required for a complete check and adjustment of this instrument. The test equipment specifications given in Table 6-1 are the minimum required to meet the Performance Requirements listed in the Specification tables, Section 1. Detailed operating instructions for test equipment are omitted in this procedure. Refer to the test equipment instruction manual if more information is needed.

Special Fixtures

Special fixtures are used only where they facilitate instrument adjustment. These fixtures are available from Tektronix, Inc. Order by part number from your local Tektronix Field Office or representative.

http://manoman.sqhill.com

Test Equipment Alternatives

The test equipment listed in the Examples of Applicable Test Equipment column of Table 6-1 is required to check and adjust this instrument. The Checks and Adjustments procedure is based on the first item of equipment given as an example. If other equipment is substituted, control settings or setups may need to be altered. If the exact item of equipment given as an example is not available, refer to the Minimum Specifications column to determine if other equipment may be substituted. Then check the Purpose column. If you determine that your measurement requirements will not be affected, the item and corresponding step(s) can be deleted.

Signal Connections

Detailed signal-connection information is not provided except when critical for a particular test. Rear-panel output connectors should be connected to other equipment with 50-ohm BNC cables. When simultaneously connecting a signal to two inputs, use a BNC T connector. For test equipment signal-connection and termination information, refer to the test equipment instruction manuals.

Table 6-1
TEST EQUIPMENT

Description	Minimum Specification	Purpose	Examples of Applicable Test Equipment
1. Precision DC Voltmeter	Range, −75 to +150 volts; accuracy, within 0.1%	Check and adjustment of calibrator output accuracy, power supply voltages, Z-axis display, and storage system voltages.	a. Tektronix DM 501 Digital Multimeter with power module. b. Fluke Model 825A Differential DC Voltmeter.
2. DC Voltmeter (VOM)	Range, to 2000 volts; accuracy, checked to within 1% at −1955 volts.	High-voltage power supply adjustment.	a. Triplett Model 630-NA. b. Simpson Model 262. c. Item 1 used with a precision voltage divider.
3. Time-Mark Generator	Marker outputs, 2 nanoseconds to 0.1 second; marker accuracy within 0.1%; trigger output, 1 millisecond.	Check and adjustment of crt geometry, horizontal timing, and calibrator frequency.	a. Tektronix TG 501 Time-Mark Generator with power module. b. Tektronix 2901 Time-Mark Generator. c. Tektronix Type 184 Time-Mark Generator.
4. Low-Frequency Sine-Wave Generator	Frequency, 250 kilohertz to 1 megahertz; output amplitude, variable from 50 millivolts to 3 volts into 50 ohms	Check and adjust stored writing speed and hroizontal bandwidth.	a. Tektronix SG 503 Signal Generator with power module. b. General Radio 1310-B Oscillator.
5. Medium-Frequency Sine-Wave Generator	Frequency, 2.5 to 150 megahertz; output amplitude 1 volt p-p into 50 ohms; accuracy, within 2%.	Z-axis input check and stored writing speed checks and adjustments.	a. Tektronix SG 503, Variable-Leveled Output Signal Generator with power module. b. Tektronix 191 Constant-Amplitude Signal Generator. c. General Radio 1215-C with 1263-C Amplitude-Regulating Power Supply.

http://manoman.sqhill.com

Table 6-1 (cont)

Description	Minimum Specification	Purpose	Examples of Applicable Test Equipment
6. High-Frequency Sine-Wave Generator	Frequency, 245 megahertz to 1 gigahertz; reference frequency, 20 megahertz or lower; output amplitude, variable from 0.5 to 4 volts into 50 ohms; amplitude accuracy, constant within 1% of reference as output frequency changes.	Check and adjustment of vertical bandwidth, vertical channel isolation, and stored writing speed.	a. Tektronix SG 504, Signal Generator with power module. b. Wiltron Model 610C Swept Frequency Generator with Model 61083C, 10 to 1220 megahertz plug-in.
7. Amplifier Unit	Tektronix 7A-series plug-in unit.	Used throughout procedure to provide vertical input to the instrument under adjustment.	a. Tektronix 7A29 Amplifier unit. b. Tektronix 7A19 Amplifier unit.
8. Dual-Trace Amplifier Unit	Any 7A-series dual-trace amplifier unit.	Used to check position and operation of READOUT display.	a. Any 7A-series dual-trace amplifier unit (may be shared with 7000-series test oscilloscope — item 11).
9. Time-Base Unit (Two Required)	Tektronix 7B80 series; delaying unit needed for checking DLY'D gate out (7B85).	Used throughout procedure to provide sweep (delaying time base).	a. Tektronix 7B85 Time Base. b. Tektronix 7B10 Time Base.
10. Signal Standardizer Calibration Fixture	Produces gain-check and pulse-response waveforms.	Used throughout procedure to standardize instrument so plug-in units can be interchanged without complete readjustment.	a. Tektronix Calibration Fixture 067-0587-02. b. 7000-series plug-in units with suitable signal sources may be substitituted if lower performance is acceptable.
11. Test Oscilloscope	Bandwidth, dc to 75 megahertz; minimum deflection factor, 10 millivolts/division; accuracy, within 3%. Dual-channel with an inverting input and both added and alternate vertical modes.	Used for performance check and adjustment.	a. Tektronix 7603 Oscilloscope System with 7A18 Amplifier,7B53A Time Base. b. Tektronix 465 Oscilloscope. c. Refer to the Tektronix Products Catalog for compatible oscilloscope system.
12. 10X Passive Probe (Two Required)	Compatible with test oscilloscope used.	Used to check power-supply ripple, signals out, calibrator, and Z-axis adjustment.	a. Tektronix P6053B or P6054A probe.
13. T Connector	BNC-to-BNC.	External Z-axis operation check.	a. Tektronix Part 103-0030-00.
14. Termination (Two Required)	Impedance, 50 ohms; accuracy, within 2%; connectors, BNC.	Output termination for signal generators if amplifier unit is not 50-ohm input impedance.	a. Tektronix Part 011-0049-01.

http://manoman.sqhill.com

Table 6-1 (cont)

Description	Minimum Specification	Purpose	Examples of Applicable Test Equipment
15. Cable (Two Required)	Impedance, 50 ohms; type, RG-58/U; length, 18 inches; connectors, BNC.	Signal interconnection.	a. Tektronix Part 012-0076-00.
16 Cable (Two Required)	Impedance, 50 ohms; type, RG-58/U; length, 42 inches; connectors, BNC.	Signal interconnection.	a. Tektronix Part 012-0057-01.
17. Attenuator	Attenuation, 2X; impedance, 50 ohms; accuracy, ±2%; connectors, BNC male and female.	Reduce amplitude of SG 504 output.	a. Tektronix Part 011-0069-02.
18. Slotted Screwdriver*	Three-inch shaft, 3/32-inch bit.	Used throughout adjustment procedure to adjust variable resistors.	a. Xcelite R-3323.
19. Low-Capacitance Screwdriver*	One-inch shaft.	Used throughout procedure to adjust variable capacitors.	a. Tektronix Part 003-0000-00.
20. Nylon Tuning Tool*	Fits 5/64-inch (ID) hex cores.	Vertical high-frequency compensation.	a. Handle and insert, Tektronix Parts 003-0307-00 and 003-0310-00.
21. Rigid Plug-in Extender	Provides access to power supply voltages.	Power supply voltages, trigger system check and adjustment.	a. Tektronix Part 067-0589-00.

*** Used for calibration only; not used for performance check.**

http://manoman.sqhill.com

PERFORMANCE CHECK/ADJUSTMENT PROCEDURE

7934 Serial No. _____

Calibration Date _____

Performance Check Date _____

Tested by _____

Introduction

The following procedure checks and adjusts the 7934 to meet the performance requirements given in the Specifications section.

Index to Check and Adjustment Procedure

	Page
A. POWER SUPPLY	6-7
1. Adjust Preregulator (R93)	6-7
2. Adjust +50 Volt Power Supply (R15)	6-7
3. Check Power-Supply Voltages	6-7
B. Z-AXIS AND DISPLAY	6-9
1. Adjust −1955 V Supply (R2285)	6-9
2. Adjust CRT Grid Bias (R2135, R4480)	6-9
✓ 3. Check/Adjust Trace Alignment (R22, R2105, R2470, R2475)	6-10
4. Adjust Stigmator (R2110)	6-11
5. Adjust Auto-Focus Operation (R2140, R2180, R2315, R2365, R2366, R2425, R2435)	6-11
6. Adjust Z-Axis Transient Response (C2235, C2425, C2435, R2235)	6-11
7. Adjust Geometry (R100)	6-12
✓ 8. Check External Z-Axis Operation	6-12
C. CALIBRATOR AND OUTPUT SIGNALS	6-13
✓ 1. Check/Adjust Calibrator Output Voltage (R385)	6-13
✓ 2. Check/Adjust Calibrator 1 kHz Repetition Rate (R375)	6-13
✓ 3. Check Calibrator Rise Time, Fall Time, and Duty Cycle	6-13
✓ 4. Check A and B Sawtooth Output Signals	6-14
✓ 5. Check A Gate, B Gate, and Delayed Gate Output Signals	6-14
D. TRIGGER SYSTEM	6-16
1. Adjust A Trigger DC Centering and Gain (R86, R91)	6-16
2. Adjust B Trigger DC Centering and Gain (R41, R44)	6-17
✓ 3. Check/Adjust Vertical Signal Out DC Centering (R28)	6-17
✓ 4. Check Trigger Selector Operation	6-17
E. HORIZONTAL SYSTEM	6-19
✓ 1. Check/Adjust Horizontal Amplifier Centering and Gain (R8, R22, R2220)	6-19
2. Adjust High-Frequency Timing (C14, C18, C24, R86)	6-20
✓ 3. Check/Adjust X-Y Compensation (C832)	6-21
✓ 4. Check Horizontal Bandwidth	6-21
F. VERTICAL SYSTEM	6-23
1. Adjust Vertical Amplifier Centering (R535, R736)	6-23
✓ 2. Check/Adjust Vertical Amplifier Gain (R211, R2175)	6-23
✓ 3. Check Vertical Low-Frequency Linearity	6-24
4. Adjust Vertical Thermal Compensation (C200, R130, R131, R132, R237, R238, R335)	6-24
5. Adjust Vertical Channel Switch Compensation (C538, C638, R512, R515, R520, R525, R530, R612, R615, R620, R625, R630)	6-25
6. Adjust Vertical High-Frequency Compensation (C215, C401, L100, R83, R215, R404, R405)	6-25
7. Check Vertical Amplifier 500 Megahertz Gain	6-26
8. Check Vertical Channel Isolation	6-27
✓ 9. Check Vertical Display Modes	6-28
✓ 10. Check Vertical Trace Separation (B) Operation	6-28
G. READOUT SYSTEM	6-29
1. Check/Adjust Readout Vertical Separation, Centering, and Character Height (R13, R737, R3510, R3560)	6-29
2. Adjust Character Clock (C3455)	6-29
3. Adjust Column and Row Match (R3483, R3543)	6-30
4. Check Readout Modes	6-30
H. STORAGE SYSTEM	6-31
✓ 1. Check/Adjust Bistable Operation (R2745)	6-31
✓ 2. Check Save Mode and Save Intensity Control	6-32
✓ 3. Check/Adjust Fast Bistable Operation (R2845, R2855)	6-32
✓ 4. Check Fast Variable Persistence Full Scan Writing Speed	6-33

✓Performance Requirement check; see introductory information.]

http://manoman.sqhill.com

5. Adjust Variable Persistence OP Level and Prep Level (R2725, R2735) 6-34
6. Adjust Fast Variable Persistence Front Mesh Stability (R2705) 6-34
7. Adjust Fast Variable Persistence Mesh Stability and Transfer Level (R2846, R2850) 6-35
✓ 8. Check Fast Variable Persistence Reduced Scan Writing Speed..... 6-35
✓ 9. Check Variable Persistence Operation. . 6-36
✓10. Check Auto Erase 6-37
11. Check Readout Storage Functions and Multi Trace Delay 6-37

Setup Procedure

NOTE

The performance of this instrument can be checked at any ambient temperature from 0 to +50°C unless otherwise stated. Adjustments must be performed at an ambient temperature from +20 to +30°C for specified accuracies.

1. Remove the side and bottom covers from the 7934. Refer to the Maintenance section of this manual for panel removal information.

2. Connect the instrument to a power source which meets the voltage and frequency requirements marked on the instrument rear panel. (Refer to the General Information section in this manual for operating voltage information.) Press the POWER button in.

3. Allow at least 30 minutes warmup before proceeding. When the 7934 power is turned off during this procedure, allow the instrument to return to operating temperature before proceeding.

NOTE

Titles for external controls of the 7934 are capitalized in this procedure (e.g., B TRIGGER SOURCE). Internal adjustments are initial capitalized only (e.g., Horiz Gain).

CAUTION

To prevent instrument damage, plug-in units should not be installed or removed without first turning the instrument power off.

✓Performance Requirement check; see introductory information.]

http://manoman.sqhill.com

A. POWER SUPPLY

Equipment Required (see Table 6-1, Test Equipment)

1. Precision DC Voltmeter [1]
2. Slotted Screwdriver [18]

Control Settings

Set the 7934 controls as follows:

A INTENSITY	Counterclockwise
B INTENSITY	Counterclockwise
READOUT	OFF (in detent)
GRAT ILLUM	Counterclockwise
REDUCED SCAN	Button out
STORE OFF	Button in
POWER	Button out
All Other Controls	No change

See Power Supply Adjustments pullout in the Diagrams section for location of adjustments and test points.

A1. Adjust Preregulator (R93)

a. Connect the precision dc voltmeter between TP126 and chassis ground (see Figure 8-32). Access to TP126 is through the prereg adjustment hole in the bottom of the power supply unit.

b. Check meter reading for +108 volts within the limits of +107.9 to +108.1 volts. If meter reading is within the given tolerance, proceed to step A2.

c. ADJUST — Prereg ADJ R93 (see Figure 8-32) for a meter reading of +108 volts within 0.1 volt.

A2. Adjust +50 Volt Power Supply (R15)

WARNING

Extreme caution must be used when operating the 7934 with the power unit removed due to the line voltage, high voltage, and high current potentials present.

NOTE

The Power Supply voltages can be checked without removing the power unit by using the 7000-Series plug-in (rigid) extender, part 067-0589-00.

a. Disconnect the line cord from the power source. Remove any plug-in units from the plug-in compartments. Expose the 7934 Power Supply adjustments and test points by removing the power unit from the rear of the 7934 (interconnecting cables remain connected). See the Maintenance section in this manual for power unit removal instructions.

b. Connect the line cord to the power source and press the POWER button in.

c. Connect the precision dc voltmeter between TP +50 V Sense and TP GND Sense on the Low-Voltage Regulator circuit board (see Figure 8-33).

d. Check the meter reading for +50 volts, within the limits of +49.8 to +50.2 volts.

e. ADJUST — +50 V ADJ R15 (see Figure 8-33) for a meter reading of +50 volts within 0.1 volt.

f. INTERACTION — Any change in the setting of R15 may affect the operation of all circuits in this instrument.

A3. Check Power-Supply Voltages

a. Table 6-2 lists the low-voltage power supplies in this instrument. Check each supply with the precision dc voltmeter for output voltage within the given tolerance. Connect meter common lead to TP GND Sense (see Figure 8-33).

b. INTERACTION — If the power supplies are not within the tolerances given in Table 6-2, repeat steps A1 and A2.

Table 6-2
POWER SUPPLY TOLERANCES

Power Supply Test Points (see Figure 8-33)	Output Voltage Limits
TP −50 V Sense	−49.8 to −50.2 Volts
TP −15 V Sense	−14.85 to −15.15 Volts
TP +5 V Sense	+4.9 to +5.1 Volts
TP +15 V Sense	+14.85 to +15.15 Volts
TP +50 V Sense	+49.5 to +50.5 Volts

c. Disconnect the precision dc voltmeter.

http://manoman.sqhill.com

NOTE

Regulation of the individual power supplies can be checked using the procedure given under Troubleshooting Techniques in the Maintenance section.

d. Disconnect the line cord from the power source.

NOTE

Access to Trigger System adjustments requires that the power unit be removed. If adjustment of the Trigger System is anticipated, do not install the power unit until after completing Step D.

e. Install the power unit and connect the line cord.

http://manoman.sqhill.com

B. Z-AXIS AND DISPLAY

Equipment Required (see Table 6-1, Test Equipment)

1. Precision DC Voltmeter [1]
2. DC Voltmeter (VOM) [2]
3. Low-Frequency Sine-Wave Generator [4]
4. Amplifier Unit [8]
5. Time-Base Unit [9]
6. Signal Standardizer Calibration Fixture [10]
7. Test Oscilloscope [11]
8. 10X Passive Probe [12]
9. T connector (BNC) [13]
10. Slotted Screwdriver [18]
11. Low-Capacitance Screwdriver [19]

Control Settings

Set the 7934 controls as follows:

A INTENSITY	Fully counterclockwise
FOCUS	Midrange
B INTENSITY	Fully counterclockwise
READOUT	OFF (in detent)
GRAT ILLUM	Midrange
REDUCED SCAN	Button out
STORE OFF	Button in
POWER	Button out
VERTICAL MODE	RIGHT
A TRIGGER SOURCE	VERT MODE
HORIZONTAL MODE	A
VERT TRACE SEPARATION (B)	Midrange
B TRIGGER SOURCE	VERT MODE
Horizontal Selector (rear of A HORIZ compartment)	Norm

See Z-Axis/Display Adjustments pullout in the Diagrams section for location of adjustments and test points.

B1. Adjust −1955 V Supply (R2285)

a. Remove the four screws that secure the fan housing to the rear of the Display Unit. Connect the dc voltmeter (VOM), set to measure at least 2000 volts, between the −1955 V test point TP2298 (see Figure 8-34) and chassis ground.

b. Press the POWER button in.

c. Check meter reading; −1955 volts within the limits of −1935.5 to −1974.5 volts.

d. ADJUST — −1955 V adjustment R2285 (see Figure 8-34) for a meter reading of −1955 volts.

e. Press and release the POWER button and disconnect the voltmeter.

f. Press the POWER button in.

B2. Adjust CRT Grid Bias (R2135, R4480)

a. Connect the precision dc voltmeter between the DC Z-Axis test point TP2264 and chassis ground (see Figure 8-34).

b. ADJUST — Z-Axis Level adjustment R4480 (see Figure 8-35) for the lowest obtainable voltage on the voltmeter; then, set the Z-Axis level adjustment R4480 for 1 volt above the lowest obtainable voltage.

c. Disconnect the voltmeter

d. Install the signal standardizer calibration fixture in the RIGHT VERT compartment and a time-base unit in the A HORIZ compartment.

e. Set the time-base unit for a free-running sweep at a sweep rate of 0.2 millisecond/division.

f. Connect the 10X passive probe to the input of the test oscilloscope (be sure the probe is correctly compensated).

g. Set the test oscilloscope for dc input coupling with a vertical deflection factor of 2 volts/division (20 volts/division at the probe tip) and a sweep rate of 1 millisecond/division.

h. Connect the probe tip to the DC Z-Axis test point TP2264 (see Figure 8-34). Connect the probe ground to chassis ground with a short grounding strap.

i. Set the A INTENSITY control fully clockwise.

j. Note the pulse amplitude indicated on the test oscilloscope. If the pulse amplitude is 73 volts or less, no adjustment is necessary; if the pulse amplitude is greater than 73 volts, set the Z-Axis Level adjustment R4480 (see Figure 8-35) for a pulse amplitude of 73 volts by lowering the level at the top of the pulse without raising the bottom level of the pulse.

k. Set the A INTENSITY control for an 8 volt pulse displayed on the test oscilloscope.

http://manoman.sqhill.com

l. Press the VAR PERSIST button and set the PERSISTENCE control fully clockwise.

m. Set the AUTO ERASE control fully counterclockwise but not in the MAX/OFF detent position.

n. Set the STORAGE LEVEL control for a light green crt background.

o. Set the time-base unit for a sweep rate of 5 seconds/division.

p. ADJUST — CRT Grid Bias adjustment R2135 (see Figure 8-36) so that the trace on the crt screen is just extinguished.

q. Disconnect the 10X probe.

✓B3. Check/Adjust Trace Alignment (R22, R2105, R2470, R2475)

a. Press the STORE OFF button.

b. Set the time-base unit for auto triggering with ac coupling from the internal source at a sweep rate of 1 millisecond/division.

c. Set the A INTENSITY control for a visible trace. Set the FOCUS control and ASTIG adjustment for a well-defined trace.

d. Position the trace to the center graticule line.

e. Measure the voltage between chassis ground and each of the vertical crt deflection plates with the precision dc voltmeter; then, determine the vertical plate average (add both measurements together and divide by 2).

f. Connect the precision dc voltmeter between chassis ground and the Vert Shield test point TP2105 (see Figure 8-36).

g. ADJUST — Vert Shield Comp adjustment R2105 (see Figure 8-36) for a meter reading that is 5 volts less positive than the vertical plate average determined in part e.

✓h. CHECK — Trace aligns with the center horizontal graticule line within 0.1 division.

i. ADJUST — Front-panel TRACE ROTATION adjustment to align the trace with the center horizontal graticule line.

j. Remove the signal standardizer calibration fixture and the time-base unit from the 7934. Install the signal standardizer calibration fixture in the A HORIZ compartment and the time-base unit in the RIGHT VERT compartment.

k. Position the trace to the center horizontal graticule line.

l. CHECK — Trace aligns with the center horizontal graticule line within 0.1 division.

m. ADJUST — Y-Axis Align adjustment R2475 (see Figure 8-37) to align the trace with the center horizontal graticule line.

n. Set the signal standardizer calibration fixture Test switch to Vert or Horiz Gain.

o. CHECK — Second and tenth vertical traces align with the second and tenth graticule lines within 0.08 division.

p. ADJUST — The Full Scan Horiz Gain adjustment R22 (see Figure 8-38) for eight divisions of deflection.

q. Press the REDUCED SCAN button.

r. CHECK — Second and tenth vertical traces align with the second and tenth reduced scan graticule lines within 0.08 division.

s. ADJUST — Reduced Scan Horiz Gain adjustment R2220 (see Figure 8-34) for eight divisions of deflection on the reduced scan graticule.

t. Remove the time-base unit and the signal standardizer. Install the time-base unit in the A HORIZ compartment and the signal standardizer calibration fixture in the RIGHT VERT compartment. Set the signal standardizer calibration fixture Test switch to Vert or Horiz Aux in.

✓Performance Requirement check; see introductory information.

http://manoman.sqhill.com

✓u. CHECK — Trace aligns with the center horizontal graticule line, within 0.1 reduced scan division.

v. ADJUST — Reduced Scan Trace Rotation adjustment R2470 (see Figure 8-37) to align the trace with the center horizontal graticule line.

w. Press and release the REDUCED SCAN button.

B4. Adjust Stigmator (R2110)

a. Remove the time-base unit and install an amplifier unit in the A HORIZ compartment.

b. Set the FOCUS and INTENSITY controls, and ASTIG adjustment, for a vertical line approximately 1.5 divisions in length on the crt.

c. ADJUST — Stigmator adjustment R2110 (see Figure 8-36) so the line is aligned with the vertical graticule lines.

d. Set the FOCUS control and ASTIG adjustment for a small, well-defined dot.

e. Remove the amplifier unit from the A HORIZ compartment.

B5. Adjust Auto-Focus Operation (R2140, R2180, R2315, R2365, R2366, R2425, R2435).

a. Install a time-base unit in the A HORIZ compartment.

b. Connect the low-frequency sine-wave generator to the signal standardizer calibration fixture Aux In connector; set for a 6-kilohertz display, three divisions in amplitude.

c. Set the time-base unit for auto internal triggering at a sweep rate of 20 microseconds/division.

d. Set the signal standardizer calibration fixture amplitude for a six-dvision display.

e. Set the A INTENSITY control for a low-intensity display.

f. Set the FOCUS control and ASTIG adjustment for a well-defined display.

g. Press the REDUCED SCAN button.

h. ADJUST — Reduced Scan Focus adjustment R2140 and Reduced Scan Astig adjustment R2180 (see Figure 8-36) for a well-defined display.

i. Set the A INTENSITY control fully clockwise.

j. ADJUST — Reduced Scan Auto Focus adjustment R2365 and Reduced Scan Auto Astig adjustment R2425 (see Figure 8-34) for the best well-defined display possible.

k. Press and release the REDUCED SCAN button.

l. ADJUST — Full Scan Auto Focus adjustment R2366 and Full Scan Auto Astig adjustment R2435 (see Figure 8-34) for the best well-defined display possible.

m. Disconnect the low-frequency sine-wave generator.

n. Set the A INTENSITY control for a low intensity level.

o. Set the READOUT control fully clockwise (not in PULSED detent).

p. ADJUST — Readout Focus adjustment R2315 (see Figure 8-34) for a well-defined readout display.

q. Set the READOUT control fully counterclockwise to the OFF detent position.

B6. Adjust Z-Axis Transient Response (C2235, C2425, C2435, R2235)

a. Set the test oscilloscope for a vertical deflection factor of 0.2 volt/division (2 volts/division at probe tip) at a sweep rate of 20 nanoseconds/division.

b. Set the A INTENSITY control fully clockwise.

✓Performance Requirement check; see introductory information.

http://manoman.sqhill.com

c. Connect the 10X probe to the Z-Comp test point TP2288 (see Figure 8-34).

d. ADJUST — Z Comp 1 adjustment C2235 and Z Comp 2 adjustment R2235 (see Figure 8-34) for an optimum square corner on the displayed pulse.

e. Move the 10X probe to the Auto Astig test point TP2408 (see Figure 8-34).

f. Set the test oscilloscope vertical deflection factor for 1 volt/division (10 volts/division at probe tip) at a sweep rate of 1 microsecond/division.

g. Set the 7934 HORIZONTAL MODE switch to CHOP.

h. Set the A INTENSITY control fully clockwise and the B INTENSITY control fully counterclockwise.

i. ADJUST — Full Scan Auto Astig compensation adjustment C2435 (see Figure 8-34) for a flat top on the test oscilloscope displayed waveform.

j. Press the REDUCED SCAN button.

k. ADJUST — Reduced Scan Auto Astig compensation adjustment C2425 (see Figure 8-34) for a flat top on the test oscilloscope displayed waveform.

l. Press and release the REDUCED SCAN button.

m. Disconnect the 10X probe.

B7. Check/Adjust Geometry (R100)

a. Set the HORIZONTAL MODE switch to A.

b. Set the A INTENSITY control to midrange.

c. Install the signal standardizer calibration fixture in the A HORIZ compartment and the time-base unit in the RIGHT VERT compartment.

d. Set the signal standardizer calibration fixture Test switch to Vert or Horiz Gain and the Rep Rate switch to 100 kHz.

e. Set the time-base unit sweep rate to 1 microsecond/division.

f. CHECK — Vertical bowing and tilt of the display is less than 0.1 division.

g. ADJUST — Geometry adjustment R100 (see Figure 8-38) for minimum bowing and tilt of the display.

h. Remove the signal standardizer calibration fixture and time-base unit.

✓B8. Check External Z-Axis Operation

a. Install an amplifier unit in the RIGHT VERT compartment and the time-base unit in the A HORIZ compartment.

b. Connect the output of the low-frequency sine-wave generator to the amplifier unit input (use a BNC T connector at the amplifier input).

c. Set the amplifier unit for a calibrated deflection factor of 0.5 volt/division and the time-base unit sweep rate for 20 microseconds/division.

d. Set the low-frequency sine-wave generator for a four-division display at 50 kilohertz (one volt above and below ground).

e. Set the A INTENSITY control for a dim display.

f. Connect the signal from the output of the T connector at the amplifier input to the Z-AXIS INPUT connector on the rear panel.

✓g. CHECK — Positive portion of the displayed waveform is blanked out.

h. Disconnect all test equipment and remove the plug-in units.

i. Press and release the POWER button.

j. Replace the fan housing.

✓Performance Requirement check; see introductory information.

http://manoman.sqhill.com

C. CALIBRATOR AND OUTPUT SIGNALS

Equipment Required (see Table 6-1, Test Equipment)

1. Precision DC Voltmeter [1]
2. Time-Mark Generator [3]
3. Amplifier Unit [8]
4. Time-Base Unit (with delaying mode) [9]
5. Test Oscilloscope (dual-trace) [11]
6. T connector (BNC) [13]
7. Cable (18-inch) [15]
8. Cable (42 inch, two required) [16]
9. Slotted Screwdriver [18]

Control Settings

Set the 7934 controls as follows:

A INTENSITY	Fully counterclockwise
FOCUS	No change
B INTENSITY	Fully counterclockwise
READOUT	OFF (in detent)
GRAT ILLUM	Midrange
REDUCED SCAN	Button out
STORE OFF	Button in
POWER	Button in
VERTICAL MODE	RIGHT
A TRIGGER SOURCE	VERT MODE
HORIZONTAL MODE	A
VERT TRACE SEPARATION (B)	Midrange
B TRIGGER SOURCE	VERT MODE
Horizontal Selector (rear of A HORIZ compartment)	Norm

See Calibrator/Output Signals Adjustments pullout in the diagrams section for location of adjustments and test points.

✓C1. Check/Adjust Calibrator Output Voltage (R385)

a. Press both the 4 V and 0.4 V CALIBRATOR buttons.

b. Connect the precision dc voltmeter between the CALIBRATOR output connector and ground.

✓c. CHECK — Meter reading for 0.4008 volt within the limits of 0.3968 to 0.4048 volt.

d. ADJUST — 0.4 Volts DC adjustment R385 (see Figure 8-39) for a meter reading of exactly 0.4008 volt.

e. Disconnect the precision dc voltmeter.

✓Performance Requirement check; see introductory information.

✓C2. Check/Adjust Calibrator 1 kHz Repetition Rate (R375)

NOTE

A frequency counter with an accuracy of at least 0.1% may be used to adjust the calibrator repetition rate.

a. Connect 1-millisecond time-markers to the test oscilloscope external trigger input and to the non-inverting vertical channel of the test oscilloscope (use a BNC T connector). Connect the 7934 CALIBRATOR output to the other test oscilloscope vertical channel. Press the 4 V CALIBRATOR button in.

b. Set the test oscilloscope triggering to auto mode with ac coupling from the external source and adjust the triggering level for a stable display. Set the sweep rate for 1 millisecond/division and the vertical mode to alternate.

c. Set the test oscilloscope vertical deflection factor to display two divisions of CALIBRATOR signal and one division of time-marker signal.

d. Set the test oscilloscope vertical mode to add, and the sweep rate for 0.2 second/division.

✓e. CHECK — Time required for the 1-millisecond time marks to drift from the positive level of the CALIBRATOR signal to the negative level, and back to the positive level must be at least 0.4 seconds (2 divisions). This time can be measured directly from the display by observing the number of divisions that the markers move across the display area before it returns to the positive level.

f. ADJUST — 1 kHz ADJ adjustment R375 (see Figure 8-39) for minimum drift of the time marks.

g. Disconnect all test equipment

✓C3. Check Calibrator Rise Time, Fall Time, and Duty Cycle

a. Set the Calibrator to the 4 V position.

b. Connect the CALIBRATOR output to the inverting vertical input of the test oscilloscope and set the vertical mode to display the inverting channel.

http://manoman.sqhill.com

c. Set the test oscilloscope vertical deflection to display four divisions of CALIBRATOR signal.

d. Set the test oscilloscope for a stable display, internally triggered on the rising portion of the calibrator signal at a sweep rate of 0.1 microsecond/division.

✓e. CHECK — Displayed waveform for not more than 2.5 divisions between the 10% to 90% points of the waveform (rise time, 250 nanoseconds or less).

f. Set the test oscilloscope for a stable display triggered on the falling portion of the waveform.

✓g. CHECK — Displayed waveform for not more than 2.5 divisions between the 90% and 10% points (fall time, 250 nanoseconds or less).

h. Set the test oscilloscope triggering for auto mode with ac coupling from the internal source at a sweep rate of 0.1 millisecond/division. Set the triggering controls so the display starts at the 50% point on the rising edge of the waveform.

i. Set the test oscilloscope sweep magnifier to X10. Then, position the display horizontally so the falling edge of the waveform aligns with the center vertical graticule line.

j. Set the test oscilloscope vertical to invert the display. (NOTE: The display is triggered on the opposite slope, even though the display appears the same.)

✓k. CHECK — The 50% point on the falling edge of the waveform now displayed is within 0.4 division horizontally of the center line (indicates duty cycle of 50% within 0.1%).

l. Disconnect all cables.

✓C4. Check A and B Sawtooth Output Signals

a. Install a time-base unit in the A HORIZ compartment and set the sweep rate for 0.1 millisecond/division.

b. Set the test oscilloscope sweep rate for 0.2 millisecond/division and the vertical deflection factor for 2 volts/division.

c. Connect the +SAWTOOTH OUT connector to the test oscilloscope vertical input (1 megohm input) with the 42-inch cable.

d. Set Sweep Selector jumper S3 (see Figure 8-40) to the A position.

✓e. CHECK — Slope of the test oscilloscope display is 2 volts/division within 10% (10 volt sawtooth display for 10-division sweep).

f. Move the time-base unit to the B HORIZ compartment.

g. Set Sweep Selector jumper S3 to the B position.

✓h. CHECK — Test oscilloscope display for 1 volt/division of sweep within 10% (10 volt sawtooth display for 10-division sweep).

i. Disconnect all test equipment.

✓C5. Check A Gate, B Gate, and Delayed Gate Output Signals

a. Install a delaying time-base unit in the A HORIZ compartment. Set the time-base unit for non-delayed operation at a sweep rate of 0.5 millisecond/division. Set triggering for auto mode.

b. Set Gate Selector jumper S46 to A (see Figure 8-40).

c. Connect the rear panel + GATE OUT connector to the test oscilloscope vertical input. Set the test oscilloscope vertical deflection factor for 2 volts/division and sweep rate for 2 milliseconds/division.

✓d. CHECK — Test oscilloscope display for a gate waveform five divisions in amplitude within 10%.

e. Set the delaying time-base unit for delaying sweep operation.

f. Set Gate Selector jumper S46 to Dly'd.

✓Performance Requirement check; see introductory information.]

http://manoman.sqhill.com

✓g. CHECK — Test oscilloscope display for a gate waveform five divisions in amplitude within 10%.

h. Move the delaying time-base unit into the B HORIZ compartment. Set the time-base unit for non-delayed operation at a sweep rate of 0.5 millisecond/division with auto mode triggering.

i. Set Gate Selector jumper S46 to B.

✓j. CHECK — Test oscilloscope display for a gate waveform five divisions in amplitude within 10%.

k. Disconnect cables and remove plug-in units.

✓Performance Requirement check; see introductory information.

http://manoman.sqhill.com

D. TRIGGER SYSTEM

Equipment Required (see Table 6-1, Test Equipment)

1. Dual-Trace Amplifier Unit [8]
2. Time-base Unit (two required) [9]
3. Signal Standardizer Calibration Fixture [10]
4. Test Oscilloscope (dual trace) [11]
5. Termination (50-ohm BNC, two required) [14]
6. Cable (18-inch, two required) [15]
7. Cable (42-inch) [16]
8. Slotted Screwdriver [18]
9. Rigid Plug-in Extender [21]

Control Settings

Set the 7934 front-panel controls as follows:

A INTENSITY	Midrange
FOCUS	No change
B INTENSITY	Midrange
READOUT	OFF (in detent)
GRAT ILLUM	Midrange
REDUCED SCAN	Button out
STORE OFF	Button in
POWER	Button out
VERTICAL MODE	RIGHT
A TRIGGER SOURCE	VERT MODE
HORIZONTAL MODE	A
VERT TRACE SEPARATION (B)	Midrange
B TRIGGER SOURCE	VERT MODE
Horizontal Selector (rear of A HORIZ compartment)	Norm

See Trigger Adjustments pullout in the Diagrams section for location of adjustments and test points.

D1. Adjust A Trigger DC Centering and Gain (R86, R91)

WARNING

Extreme caution must be used when operating the 7934 with the power unit removed due to the line voltage, high voltage, and high current potentials present.

a. Disconnect the line cord from the power source. Remove all plug-in units from the plug-in compartments. Expose the 7934 trigger system adjustments and test points by removing the power unit from the rear of the 7934 (interconnecting cables remain connected). See the Maintenance section in this manual for power unit removal instructions.

b. Connect the line cord to the power source and press the POWER button in.

c. Within the plug-in extender (rigid calibration fixture), disconnect the top connector on the left and right sides (labeled A20 and B20). Connect each female connector to one of the test oscilloscope inputs with the 42-inch 50-ohm BNC cable and 50-ohm BNC termination (omit 50-ohm BNC termination if the test oscilloscope has 50-ohm input impedance).

d. Install the plug-in extender (rigid calibration fixture) in the A HORIZ compartment.

e. Set both channels of the test oscilloscope for a deflection factor of 50 millivolts/division with the inputs grounded.

f. Set the test oscilloscope for differential operation between the two channels (added display mode with one channel inverted) at a sweep rate of 0.1 millisecond/division.

g. Establish a ground reference level for the test oscilloscope by positioning the trace to the center horizontal line of the graticule. Do not change the test oscilloscope position controls after setting this ground reference.

h. Set both channels of the test oscilloscope for dc input coupling.

i. CHECK — Check the test oscilloscope display for a dc level within 0.5 division (25 millivolts) of the ground reference level in the LEFT, RIGHT, and ADD positions of the 7934 VERTICAL MODE switch.

j. ADJUST — A Trig DC Center adjustment R91 (see Figure 8-41) for a display dc level within 0.5 division (25 millivolts) of ground reference level in the LEFT, RIGHT, and ADD positions of the 7934 VERTICAL MODE switch.

k. Install the signal standardizer calibration fixture in the LEFT VERT compartment.

l. Set the VERTICAL MODE switch to LEFT.

m. Set the signal standardizer calibration fixture Test switch to Triggering Gain and the Rep Rate switch to 1 MHz.

http://manoman.sqhill.com

n. CHECK — Test oscilloscope display for nine traces with six divisions of vertical deflection between the center seven traces, within 0.9 division (300 millivolts within 45 millivolts).

o. ADJUST — A Trig Gain adjustment R86 (see Figure 8-41) for a test oscilloscope display of six divisions of deflection between center seven traces, within 0.9 division (300 millivolts within 45 millivolts).

p. Remove the signal standardizer and plug-in extender calibration fixtures (leave cables connected for next step).

D2. Adjust B Trigger DC Centering and Gain (R41, R44)

a. Install the plug-in extender in the B HORIZ compartment (see step D1 for test oscilloscope connection).

b. Set both channels of the test oscilloscope for a deflection factor of 50 millivolts/division with the inputs grounded.

c. Set the test oscilloscope for differential operation between the two channels (added display mode with one channel inverted) at a sweep rate of 20 microseconds/division.

d. Establish a ground reference level for the test oscilloscope by setting the input coupling to ground and positioning the trace to the center horizontal line of the graticule. Do not change the test oscilloscope position controls after setting this ground reference.

e. Set both channels of the test oscilloscope for dc input coupling.

f. CHECK — Test oscilloscope display for a dc level within 0.5 division (25 millivolts) of the ground reference level in the LEFT, RIGHT, and ADD positions of the 7934 VERTICAL MODE switch.

g. ADJUST — B Trig DC Center adjustment R44 (see Figure 8-41) for a dc level within 0.5 division (25 millivolts) of ground reference level in the LEFT, RIGHT, and ADD positions of the 7934 VERTICAL MODE switch.

h. Install the signal standardizer calibration fixture in the LEFT VERT compartment.

i. Set the VERTICAL MODE switch to LEFT.

j. Set the signal standardizer calibration fixture Test switch to Triggering Gain and Rep Rate switch to 1 MHz.

k. CHECK — Test oscilloscope display for nine traces with the deflection between the second and eight traces to be six divisions within 0.9 division (300 millivolts within 45 millivolts).

l. ADJUST — B Trig Gain adjustment R41 (see Figure 8-41) for a test oscilloscope display of six divisions of deflection between the center seven traces, within 0.9 division (300 millivolts within 45 millivolts).

m. Remove the plug-in extender and disconnect all test equipment.

✓D3. Check/Adjust Vertical Signal Out DC Centering (R28)

a. Set the test oscilloscope vertical deflection factor to 1 volt/division and establish a ground reference at the graticule center line.

b. Connect the VERT SIG OUT connector to the vertical input of the test oscilloscope with the 42-inch, 50-ohm BNC cable.

✓c. CHECK — Test oscilloscope display for a dc level within one division of the ground reference established in step a.

d. ADJUST — Vert Sig Out DC Center adjustment R28 (see Figure 8-41) for a dc level within one division of the ground reference level.

e. Disconnect all cables.

✓D4. Check Trigger Selector Operation

a. Install the signal standardizer calibration fixture in the RIGHT VERT compartment, an amplifier unit in the LEFT VERT compartment, and time-base units in both horizontal compartments.

b. Set both time-base units for auto, internal triggering at a 0.2 millisecond/division sweep rate.

✓Performance Requirement check; see introductory information.

http://manoman.sqhill.com

c. Connect the CALIBRATOR 0.4 V output to the amplifier unit with the 18-inch BNC cable. Set the amplifier for a two-division display in the upper half of the graticule area.

d. Set the VERTICAL MODE switch to RIGHT.

e. Set the signal standardizer calibration fixture Test switch to Vert or Horiz + Step Resp, the Rep Rate switch to 10 kHz, and the Amplitude control for a two-division display in the lower half of the graticule area.

f. Set the VERTICAL MODE switch to ALT.

✓g. CHECK — The crt display for 1 kHz and 10 kHz triggered waveforms (adjust the time-base unit trigger level control as necessary).

h. Set the A TRIGGER SOURCE switch to RIGHT VERT.

✓i. CHECK — Sequentially select all positions of the VERTICAL MODE switch and check for a stable display of only the 1 kHz waveform.

j. Set the A TRIGGER SOURCE switch to RIGHT VERT.

✓k. CHECK — Sequentially select all positions of the VERTICAL MODE switch and check for a stable display of only the 10 kHz waveform.

l. Set the VERTICAL MODE switch to ALT and the HORIZONTAL MODE switch to B.

✓m. CHECK — Crt display for 1 kHz and 10 kHz triggered waveforms.

n. Set the B TRIGGER SOURCE switch to LEFT VERT.

✓o. CHECK — Sequentially select all positions of the VERTICAL MODE switch and check for a stable display of only the 1 kHz waveform.

p. Set the B TRIGGER SOURCE switch to RIGHT VERT.

✓q. CHECK — Sequentially select all positions of the VERTICAL MODE switch and check for a stable display of only the 10 kHz waveform.

r. Set the VERTICAL MODE switch to ALT, the HORIZONTAL MODE switch to ALT, and the B TRIGGER SOURCE switch to VERT MODE.

✓s. CHECK — The crt display for the B HORIZ time-base unit should be triggered on the 1 kHz waveform; the A HORIZ time-base unit should be triggered on the 10 kHz waveform (slaved-alternate mode).

t. Disconnect all test equipment and remove the plug-in units.

✓Performance Requirement check; see introductory information.

http://manoman.sqhill.com

E. HORIZONTAL SYSTEM

Equipment Required (see Table 6-1, Test Equipment)

1. Precision DC Voltmeter [1]
2. Time-Mark Generator [3]
3. Low-Frequency Sine-Wave Generator [4]
4. Amplifier Unit (two required) [8]
5. Time-base Unit [9]
6. Signal Standardizer Calibration Fixture [10]
7. T Connector (BNC) [13]
8. Cable (18-inch) [15]
9. Cable (42-inch) [16]
10. Slotted Screwdriver [18]
11. Low-Capacitance Screwdriver [19]

Control Settings

Preset the 7934 controls as follows:

A INTENSITY	Midrange
FOCUS	No change
B INTENSITY	Midrange
READOUT	OFF (in detent)
GRAT ILLUM	As desired
REDUCED SCAN	Button out
STORE OFF	Button in
POWER	Button in
VERTICAL MODE	RIGHT
A TRIGGER SOURCE	VERT MODE
HORIZONTAL MODE	A
VERT TRACE SEPARATION (B)	Midrange
B TRIGGER SOURCE	VERT MODE
Horizontal Selector (rear of A HORIZ compartment)	Norm

See Horizontal Adjustments pullout in the Diagrams section for location of adjustments and test equipment.

✓E1. Check/Adjust Horizontal Amplifier Centering and Gain (R8, R22, R2220)

a. Install a time-base unit in the RIGHT VERT compartment and the signal standardizer calibration fixture in the A HORIZ compartment.

b. Set the signal standardizer calibration fixture Test Switch to Vert or Horiz Aux In and the time-base unit for a free-running sweep at 1 millisecond/division.

c. Set the signal standardizer calibration fixture Test Switch to Vert or Horiz Com Mode.

d. CHECK — Trace is within 0.5 division of the center vertical graticule line.

e. ADJUST — Horiz Center adjustment R8 (see Figure 8-42) to align the displayed trace with the center vertical graticule line.

f. Set the signal standardizer calibration fixture Test switch to Vert or Horiz Gain with the Rep Rate switch set to 1 MHz. Align the bright vertical trace with the center vertical graticule line using the signal standardizer Position control.

✓g. CHECK — Second and tenth vertical traces align with the second and tenth graticule lines within 0.08 division. Note the exact error for comparison in part t.

h. ADJUST — Horiz Gain adjustment R22 (see Figure 8-42) for eight divisions between the second and tenth traces.

✓i. CHECK — The other vertical traces align with their respective graticule lines within 0.05 division. (Horiz Gain adjustment R22 should be set to optimum for valid check.)

j. Press the REDUCED SCAN button.

✓k. CHECK — Second and tenth vertical traces align with the second and tenth reduced scan graticule lines within 0.08 division.

l. ADJUST — Reduced Scan Horiz Gain adjustment R2220 (see Figure 8-43) for eight divisions between the second and tenth traces.

m. Press and release the REDUCED SCAN button.

n. Move the signal standardizer calibration fixture to the B HORIZ compartment.

o. Set the HORIZONTAL MODE switch to B.

p. Set the signal standardizer calibration fixture Test switch to Vert or Horiz Com Mode and the B INTENSITY control for a usable display.

✓Performance Requirement check; see introductory information.]

http://manoman.sqhill.com

q. CHECK — Horizontal centering of the trace is within 0.5 division of the center graticule line.

r. ADJUST — If necessary, compromise the setting of R8 for optimum centering for both horizontal compartments. If readjustment is necessary, recheck parts a through q.

s. Set the signal standardizer calibration fixture Test switch to Vert or Horiz Gain.

✓t. CHECK — Second and tenth vertical traces align within 0.08 division of the error noted in part g. Also check that the other vertical traces align with their respective graticule lines within 0.05 division. (Specified at the center graticule line.)

u. ADJUST — If necessary, compromise the setting of R22 for optimum gain for both horizontal compartments. If readjustment is necessary, recheck parts a through t.

v. Remove the signal standardizer from the B HORIZ compartment.

E2. Adjust High-Frequency Timing (C14, C18, C24, R86)

a. Install an amplifier unit in the LEFT VERT compartment.

b. Set the VERTICAL MODE switch to LEFT.

c. Move the time-base unit to the B HORIZ compartment.

d. Set the time-base unit triggering for auto mode with ac coupling from the internal source at a sweep rate of 1 millisecond/division.

e. Connect 1-millisecond markers from the time-mark generator to the amplifier unit input and adjust the amplifier unit deflection factor for about two divisions of display.

f. Set the time-base unit triggering controls for a stable display.

g. Position the first marker to the extreme left line on the graticule.

✓Performance Requirement check; see introductory information.

h. Set the time-base unit sweep-calibration adjustment for one marker at each major graticule division between the second and tenth graticule lines (center eight divisions).

i. CHECK — Refer to the time-base unit instruction manual for performance check or calibration procedures for checking high-frequency timing and linearity. Use the procedures and limits given for the three fastest sweep rates that do not exceed 0.5 nanosecond/division. If the given limits are met, omit the remainder of this step.

j. Set the time-base unit for a 10 nanoseconds/division sweep rate with X1 sweep magnification.

k. Apply 10 nanosecond time markers and set the amplifier unit vertical deflection for about two divisions of display.

l. ADJUST — 10 nanosecond adjustments C14 and C18 (see Figure 8-42) for one time marker for each division over the center eight graticule full-scan divisions.

m. Set the time-base unit sweep rate to 20 nanoseconds/division with X10 sweep magnification (2 nanoseconds/division).

n. Press the REDUCED SCAN button.

o. Apply 2-nanosecond time markers and set the amplifier unit vertical deflection for about two divisions of display.

p. ADJUST — 2 ns Lin adjustment R86 (see Figure 8-42) for optimum linearity over the center 10 divisions of the REDUCED SCAN graticule area.

q. Set the time-base unit sweep rate to 10 nanoseconds/division and magnification to X10.

r. Press and release the REDUCED SCAN button.

s. ADJUST — 1 ns adjustment C24 (see Figure 8-42) for one time marker every two divisions on the full-scan graticule area.

t. INTERACTION — Repeat part i.

http://manoman.sqhill.com

✓E3. Check/Adjust X-Y Compensation (C832)

a. Install amplifier units in the LEFT VERT and A HORIZ compartments.

b. Set the HORIZONTAL MODE switch to A.

c. Set both amplifier units for a deflection factor of 50 millivolts/division with dc input coupling.

d. Connect the low-frequency sine-wave generator to the input of either amplifier with the 42-inch 50-ohm BNC cable, and a T connector (BNC). Connect the output of the T connector to the input of the other amplifier with the 18-inch 50-ohm cable.

e. Set the low-frequency sine-wave generator output for eight divisions of vertical and horizontal deflection at a frequency of 35 kilohertz.

✓f. CHECK — Crt lissajous display for a separation of 0.28 division or less (indicates 2° or less phase shift; see Figure 6-1).

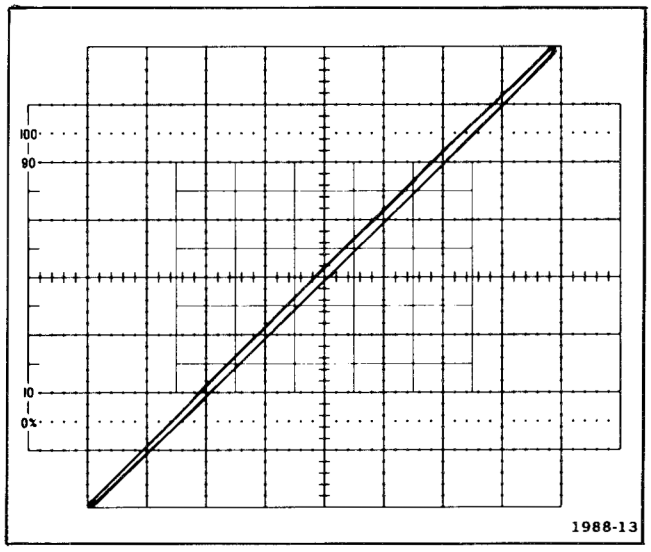

Fig. 6-1. Typical display when checking X-Y compensation.

g. Remove the amplifier unit from the A HORIZ compartment and install it in the B HORIZ compartment (leave signals connected).

h. Set the HORIZONTAL MODE switch to B.

i. Repeat parts e and f.

NOTE

If the instrument under test does not contain Option 02, omit the remainder of this step.

j. Press and release the POWER button.

k. Remove the plug-in from the B HORIZ compartment.

l. Remove the metal shield at the rear of the B HORIZ compartment.

m. Install the amplifier unit in the B HORIZ compartment.

n. Press the POWER button.

o. Set the low-frequency sine-wave generator for eight divisions of vertical and horizontal deflection at one megahertz.

✓p. CHECK — Crt lissajous display for a separation of 0.28 division or less (indicates 2 degrees or less phase shift).

q. ADJUST — X-Y Comp adjustment C832 (see Figure 8-44) for minimum separation of the display. It may be necessary to remove the left side cover of the plug-in unit installed in the B HORIZ compartment to provide access to C832.

r. Press and release the POWER button.

s. Disconnect all cables and remove plug-in units.

t. Replace the metal shield at the rear of the B HORIZ compartment.

✓E4. Check Horizontal Bandwidth

a. Install a time-base unit in the RIGHT VERT compartment and an amplifier unit in the B HORIZ compartment.

✓Performance Requirement check; see introductory information.

http://manoman.sqhill.com

✓k. CHECK — For one trace per reduced-scan graticule division within 0.05 division.

l. ADJUST — Reduced Scan Vert Gain adjustment R2175 (see Fig. 8-47) for one division between each of the center seven displayed traces within 0.05 division.

m. Press and release the REDUCED SCAN button.

✓F3. Check Vertical Low-Frequency Linearity

a. Set the signal standardizer calibration fixture Test switch to Vert or Horiz + Step Resp with the Rep Rate switch set to 1 kHz.

b. Set the signal standardizer calibration fixture Amplitude and Position controls so the display is exactly two divisions in amplitude in the center of the graticule area.

✓c. CHECK — Position the two-division display vertically and check for not more than 0.1 division of compression or expansion anywhere within the graticule area.

d. INTERACTION — If the specification of part c is not met, perform steps F1, F2, F4, and F5.

F4. Adjust Vertical Thermal Compensation (C200, R130, R131, R132, R237, R238, R335)

a. Move the signal standardizer calibration fixture to the RIGHT VERT compartment.

b. Set the A TRIGGER SOURCE switch to RIGHT VERT.

c. Set the signal standardizer calibration fixture Rep Rate switch to 100 kHz.

d. Set the time-base unit for a sweep rate of 1 microsecond/division with internal triggering in the auto, dc mode.

e. Set the signal standardizer calibration fixture Position and Amplitude controls for an eight-division display centered on the crt.

f. Set the VERTICAL MODE switch to CHOP.

g. Set the READOUT INTENSITY control for a visible readout display.

h. CHECK — Readout display for less than 0.05 division of jitter and less than 0.05 division of deviation in the center displayed trace using the time-base sweep rates and signal standardizer repetition rates given in Table 6-3.

i. ADJUST — Thermal Compensation adjustments (see Figure 8-45) as given in Table 6-3 for minimum readout display jitter and minimum deviation of the displayed center trace.

j. INTERACTION — The adjustments listed in Table 6-3 may interact with steps F2, F3, F5, and F6; repeat as necessary.

Table 6-3
THERMAL COMPENSATION ADJUSTMENTS

Adjustment	Signal Standardizer Calibration Fixture Rep Rate	Sweep Rate
C200, R130	1 Mhz	1 μs
R238	100 kHz	10 μs
R335	10 kHz	0.1 ms
R237	1 kHz	1 ms
R132	100 Hz	10 ms
R131	10 Hz	50 ms

✓Performance Requirement check; see introductory information.]

http://manoman.sqhill.com

F5. Adjust Vertical Channel Switch Compensation (C538, C638, R512, R515, R520, R525, R530, R612, R615, R620, R625, R630)

a. Set the VERTICAL MODE switch to RIGHT.

b. Set the A TRIGGER SOURCE switch to VERT MODE.

c. Set the time-base for a sweep rate of 2 microseconds/division.

d. Set the signal standardizer calibration fixture Amplitude control for a six-division display.

e. Set the time-base Triggering and Position controls for a stable display.

f. CHECK — Displayed pulse for optimum flat top, within 0.06 division, with the signal standardizer calibration fixture Rep Rate and time-base sweep rates given in Table 6-4.

g. ADJUST — Compensation adjustments (see Figure 8-46) as given in Table 6-4 for optimum flat top on the displayed waveform.

h. Move the signal standardizer calibration fixture to the LEFT VERT compartment.

i. Set the VERTICAL MODE switch to LEFT VERT.

j. Set the signal standardizer calibration fixture Rep Rate to 100 kHz and the time-base unit sweep rate to 2 microseconds/division. Set the Amplitude and Position controls for a six-division display, centered on the graticule area.

k. CHECK — Displayed pulse for optimum flat top, within 0.06 division, with the signal standardizer calibration fixture Rep Rate and the time-base unit sweep rates given in Table 6-5.

l. ADJUST — Compensation adjustment (see Figure 8-46) as given in Table 6-5 for optimum flat top on the displayed waveform.

F6. Adjust Vertical High-Frequency Compensation (C215, C401, L100, R83, R215, R404, R405)

a. Set the signal standardizer calibration fixture Rep Rate switch to 1 MHz.

b. Set the time-base unit for a sweep rate of 2 nanoseconds/division triggered on the positive slope.

c. Set the signal standardizer calibration fixture Amplitude and Position controls for a six-division display centered on the crt. Set the time-base unit Position control to align the 50% point of the step with the second vertical graticule line.

d. CHECK — Transient response for optimum square corner and flat top on the displayed pulse within the following limits: Aberrations in the first 5 nanoseconds after the 50% point of the step should not exceed 0.3 division peak-

Table 6-4
RIGHT CHANNEL-SWITCH COMPENSATION
SIGNAL REP RATE VS: SWEEP RATE)

Adjustment	Signal Standardizer Calibration Fixture Rep Rate	Sweep Rate
C538, R530	100 kHz	2.0 μs
R525	10 kHz	20.0 μs
R520	1 kHz	0.2 ms
R515	100 Hz	2.0 ms
R512	10 Hz	20.0 ms

http://manoman.sqhill.com

to-peak. Aberrations from 5 to 10 nanoseconds after the 50% point of the step should not exceed 0.18 division peak-to-peak. Aberrations after 10 nanoseconds of the 50% point should not exceed 0.06 division peak-to-peak except to allow 0.12 division of aberrations for delay-line termination at about 130 nanoseconds from the step (change time/division setting as necessary to view 130 nanoseconds from step). Rise time of the pulse should be 600 picoseconds between the 10% and 90% points.

e. ADJUST — High-frequency compensation adjustments (see Figure 8-45) as given in Table 6-6.

f. INTERACTION — Adjustments in this step interact with steps F2, F3, and F4; repeat as necessary.

g. Move the signal standardizer calibration fixture to the RIGHT VERT compartment.

h. Set the VERTICAL MODE switch to RIGHT.

i. CHECK — Displayed pulse for optimum square corner and flat top with aberations within the limits given in part d.

j. INTERACTION — If necessary, compromise the high-frequency compensation adjustments given in Table 6-6 for best overall vertical frequency response.

F7. Check Vertical Amplifier 500 MHz Gain

a. Connect the high-frequency sine-wave generator to the Aux-In CW In Input connector of the signal standardizer calibration fixture.

b. Set the signal standardizer calibration fixture Amplitude control fully clockwise and the Test switch to the Vert or Horiz Freq Resp.

Table 6-5
LEFT CHANNEL-SWITCH COMPENSATION
(SIGNAL REP RATE VS: SWEEP RATE)

Adjustment	Signal Standardizer Calibration Fixture Rep Rate	Sweep Rate
C638, R630	100 kHz	2.0 μs
R625	10 kHz	20.0 μs
R620	1 kHz	0.2 ms
R615	100 Hz	2.0 ms
R612	10 Hz	20.0 ms

Table 6-6
HIGH-FREQUENCY COMPENSATION ADJUSTMENTS

Adjustment	Pulse Time Segment (From 50% point of step)	Adjust For (See Part d for detailed adjustment limits)
C401, R404, R405	First 5 nanoseconds	Optimum rise time and flat top with abberations not to exceed 0.3 divisions peak-to-peak.
R83 (crt termination on 7934 chassis)	First 7 nanoseconds (time-base unit sweep at 10 nanoseconds/dovosopm)	Minimum slope. R83 interacts with Vert Gain adjustment R211.
C215, R215	Front corner	Best front corner and minimum abberations. Adjust rise time for 600 picoseconds or less.
L100	From 2 to 5 nanoseconds	Best flat top.

http://manoman.sqhill.com

c. Set the time-base unit for a sweep rate of 0.1 millisecond/division with a free-running sweep.

d. Set the high-frequency sine-wave generator for a 10-division display at the reference frequency (between 6 and 50 megahertz) centered on the graticule. (To obtain a 10-division display, first obtain an eight-division display, then vertically position the display one division down and increase the output amplitude of the sine-wave generator so that the top of the display reaches the top of the graticule.)

e. Set the signal standardizer calibration fixture Amplitude control for a six-division display, centered on the graticule. (The CW Leveled indicator should be on.)

f. Without changing the output amplitude, increase the generator frequency until the displayed amplitude is reduced to 4.6 divisions. If the CW Leveled indicator extinguishes, increase the amplitude of the sine-wave generator signal until the light just turns on.

NOTE

The signal standardizer calibration fixture CW Leveled light must be on and the sine-wave generator must be properly connected for a valid check. Refer to the signal standardizer calibration fixture and high-frequency sine-wave generator manuals.

g. CHECK — Sine-wave generator frequency is 500 MHz or higher (verifies 500 megahertz gain).

h. Move the signal standardizer calibration fixture to the LEFT VERT compartment (leave signal connected).

i. Set the VERTICAL MODE switch to LEFT.

j. CHECK — Repeat parts e through g for the LEFT VERT compartment.

k. INTERACTION — If the specifications of parts g or j are not met, repeat steps F1, F2, F3, F4, F5, and F6.

✓F8. Check Vertical Channel Isolation

a. Install the amplifier unit in the LEFT VERT compartment.

b. Set the time-base for a sweep rate of 1 millisecond/division.

c. Connect the output of the high-frequency sine-wave generator to the amplifier unit input.

d. Set the output of the high-frequency sine-wave generator and the amplifier deflection factor for eight-divisions of deflection at 500 MHz.

e. Set the VERTICAL MODE switch to RIGHT.

✓f. CHECK — Crt display amplitude for 0.2 division or less of the 500 MHz signal (verifies isolation of at least 30:1 at 500 MHz).

g. Move the amplifier unit to the RIGHT VERT compartment without changing any settings.

h. Set the VERTICAL MODE switch to LEFT.

✓i. CHECK — Crt display amplitude for 0.2 division or less of the 500 MHz signal (verifies isolation of at least 30:1 at 500 MHz). Disconnect the high-frequency sine-wave generator.

j. Set the VERTICAL MODE switch to RIGHT.

k. Connect the medium-frequency sine-wave generator to the amplifier unit input.

l. Set the medium-frequency sine-wave generator for eight divisions of deflection at 150 megahertz.

m. Set the VERTICAL MODE switch to LEFT.

✓n. CHECK — Crt display amplitude for 0.08 division or less of 150 megahertz signal (verifies isolation of at least 100:1 from dc to 150 megahertz).

o. Move the amplifier to the LEFT VERT compartment without changing any settings.

p. Set the VERTICAL MODE switch to RIGHT.

✓Performance Requirement check; see introductory information.

http://manoman.sqhill.com

✓q. CHECK — Crt display amplitude for 0.08 division or less of 150 megahertz signal (verifies isolation of at least 100:1 from dc to 150 megahertz).

✓F9. Check Vertical Display Modes

a. Install an amplifier unit or the signal standardizer calibration fixture in the RIGHT VERT compartment.

b. Position the trace to the upper half of the graticule area with the right vertical unit Position control.

c. Set the VERTICAL MODE switch to LEFT and position the trace to the lower half of the graticule area with the left vertical unit Position control.

✓d. CHECK — For two traces in the ALT and CHOP positions of the VERTICAL MODE switch.

e. Set the VERTICAL MODE switch to ADD.

✓f. CHECK — For a single trace that can be positioned vertically with either vertical unit Position control.

✓F10. Check Vertical Trace Separation (B) Operation

a. Install a time base unit in the B HORIZ compartment.

b. Set both time-base units for a free-running sweep at 1 millisecond/division.

c. Set the VERTICAL MODE switch to ADD and the HORIZONTAL MODE switch to CHOP.

✓d. CHECK — Rotate the VERT TRACE SEPARATION (B) control throughout its range and check that the trace produced by the B time-base unit can be positioned above and below the trace produced by the A time-base unit by at least 4 divisions. Repeat with the HORIZONTAL MODE switch set to ALT.

✓Performance Requirement check; see introductory information.

http://manoman.sqhill.com

G. READOUT SYSTEM

Equipment Required (see Table 6-1, Test Equipment)

1. Dual-Trace Amplifier Unit [8]
2. Time-Base Unit [9]
3. Test Oscilloscope [11]
4. 10X Passive Probe (two required) [12]
5. Slotted Screwdriver [18]
6. Low-Capacitance Screwdriver [19]

Control Settings

Set the 7934 controls as follows:

A INTENSITY	Midrange
FOCUS	No change
B INTENSITY	Midrange
READOUT	OFF (in detent)
GRAT ILLUM	Midrange
REDUCED SCAN	Button out
STORE OFF	Button in
POWER	Button out
VERTICAL MODE	RIGHT
A TRIGGER SOURCE	VERT MODE
HORIZONTAL MODE	A
VERT TRACE SEPARATION (B)	Midrange
B TRIGGER SOURCE	VERT MODE
Horizontal Selector (rear of A HORIZ compartment)	Norm

See Readout Adjustments pullout in the Diagrams section for location of adjustments and test points.

G1. Adjust Readout Vertical Separation, Centering, and Character Height (R13, R737, R3510, R3560)

a. Move plug P3484 to pins 2 and 3 (see Fig. 8-47)

b. Remove all plug-in units.

c. Press the POWER button.

d. Set the READOUT Intensity control for visible characters (all zeros).

NOTE

The following tolerances are provided as guides to correct instrument operation and are not instrument specifications.

e. CHECK — Crt display for two rows of zeros, 40 zeros to a row with no character overlap. The two rows of zeros should be located vertically in the middle of the top and bottom divisions of the graticule.

NOTE

The MVA Center (Main Vertical Amplifier) Adjustment R736 must be correct before making the next adjustment. Refer to Step F1, Vertical System procedure.

f. ADJUST — Vert Separation adjustment R3560 (see Figure 8-48) and Vert Readout Center adjustment R737 (see Figure 8-49) to position the two rows of readout characters to the middle of the top and bottom divisions of the graticule. Set Vert Size adjustment R3510 (see Figure 8-48) as desired.

g. CHECK — Display for two rows of zeros, 40 zeros to each row with no character overlap. Total length of each row of characters is between 9.5 and 10 divisions.

h. ADJUST — Horiz Readout Center adjustment R13 (see Figure 8-50) to horizontally center the zeros display.

i. Press and release the POWER button.

j. Replace P3484 on pins 1 and 2.

G2. Adjust Character Clock (C3455)

a. Connect channel 1 of the test oscilloscope to pin 12 of U3502 (see Figure 8-48 with a 10X probe.

b. Connect channel 2 of the test oscilloscope to pin 13 of U3502 with a 10X probe.

c. Press the POWER button.

d. Set the test oscilloscope time-base sweep rate for 5 microseconds/division, negative triggering with the amplifier unit trigger source set to CH1.

e. ADJUST — C3455 (see Figure 8-48) for 18 positive pulses displayed on channel 2 of the test oscilloscope. Figure 6-2 shows a typical waveform.

http://manoman.sqhill.com

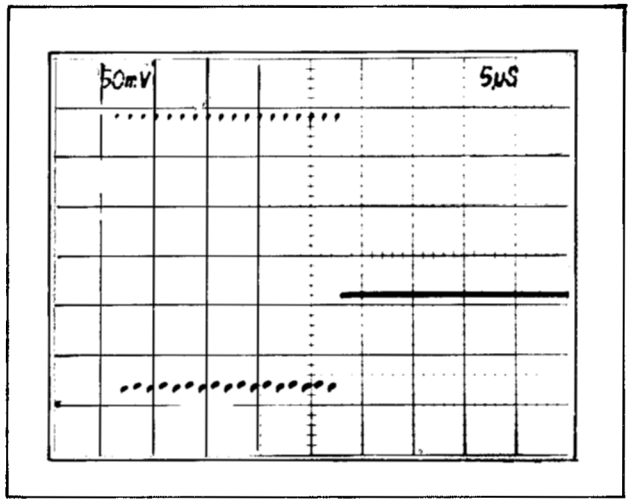

Figure 6-2. Typical display when adjusting character clock.

G3. Adjust Column and Row Match (R3483, R3543)

a. Install the dual-trace amplifier in the RIGHT VERT compartment.

b. Install the time-base unit in the A HORIZ compartment.

c. Press and hold one of the 7934 amplifier unit trace-identify buttons.

d. CHECK — The readout display for correct indication of "IDENTIFY". If the readout display is incorrect, adjustment is required.

e. ADJUST — Column Match adjustment R3543 and Row Match adjustment R3483 (see Figure 8-48) for correct readout of "IDENTIFY". Set these adjustments to the center of the range which provides correct readout indication. Release the amplifier trace-identify button.

G4. Check Readout Modes

a. Set the time-base unit for a free-running sweep.

b. CHECK — Set the time-base unit on several sweep rates throughout the time/division switch range. Check that the readout characters are presented on a free-run basis and are displayed independent of the sweep rate.

c. Set the READOUT Intensity control to PULSED and adjust the PRESET adjustment for a visible display.

d. Set the time-base unit for a free-running sweep at a rate of 0.5 second/division.

e. CHECK — Readout characters are blanked out while the sweep is running, and are displayed immediately after the end of the sweep; each character encoded by the plug-in units is displayed only once for each sweep.

http://manoman.sqhill.com

H. STORAGE SYSTEM

Equipment Required (see Table 6-1, Test Equipment)

1. Precision DC Voltmeter [1]
2. Low-Frequency Sine-Wave Generator [4]
3. Medium-Frequency Sine-Wave Generator [5]
4. High-Frequency Sine-Wave Generator [6]
5. Amplifier Unit [7]
6. Time-Base Unit [9]
7. Test Oscilloscope [11]
8. 10X Passive Probe [12]
9. Cable (42-inch, two required) [16]
10. Slotted Screwdriver [18]

Control Settings

Preset the 7934 controls as follows:

A INTENSITY	Counterclockwise
FOCUS	No change
B INTENSITY	Midrange
READOUT	OFF (in detent)
GRAT ILLUM	Midrange
REDUCED SCAN	Button out
STORE OFF	Button in
SAVE	Button out
SAVE INTENSITY	Fully clockwise
STORAGE LEVEL	Fully clockwise
MULTI TRACE DELAY	OFF (in detent)
PERSISTENCE	MAX (clockwise)
AUTO ERASE	OFF (in detent)
POWER	Button in
VERTICAL MODE	LEFT
A TRIGGER SOURCE	VERT MODE
HORIZONTAL MODE	B
VERT TRACE SEPARATION (B)	Midrange
B TRIGGER SOURCE	VERT MODE
Horizontal Selector (rear of A HORIZ compartment)	Norm

See Storage Adjustments pullout in the Diagrams section for location of adjustment and test point locations.

NOTE

Focus and astigmatism adjustment affect stored writing speed. If the stored writing speed specifications in the following procedure cannot be met, refer to Step B, Z-Axis and Display procedure. Also, optimum stored writing speed can only be obtained when actual operating voltages and waveforms are within the limits specified in the voltage and waveform conditions (see the Storage Display schematic in the Diagrams section of this manual).

✓**Performance Requirement check; see introductory information.**

✓H1. Check/Adjust Bistable Operation (R2745)

a. Install an amplifier unit in the LEFT VERT compartment and a time-base unit in the B HORIZ compartment.

b. Set the amplifier unit for deflection factor of 0.5 volt/division.

c. Set the time-base unit for auto mode triggering with ac coupling from the internal source and a 0.5 millisecond/division sweep rate.

d. Connect the low-frequency sine-wave generator to the amplifier unit and set for a 6.4-division, 1.5-kilohertz display.

e. Set the time-base unit for single-sweep operation.

f. Set the B INTENSITY control fully clockwise.

g. Press the BISTABLE button.

✓h. CHECK — Press the ERASE button and check that the waveform will store anywhere within the center 6 x 8 divisions of the graticule area without trace fade out or background fade up, within one minute. This checks the bistable writing speed at 0.03 division/microsecond. If the conditions given in this check are met, proceed to part p of this step.

i. Connect the precision dc voltmeter to Front Mesh test point TP2839 (see Figure 8-51).

j. Press the ERASE button and note the meter reading after the erase cycle.

k. Press the ERASE button and adjust the Bistable (BS) Op Level adjustment R2745 (see Figure 8-51) for a lower meter reading (after the erase cycle) until the stored waveform starts to fade out within about 15 seconds. Note the meter reading (this is the lower writing threshold). (If fade out does not occur within 15 seconds, set to the lowest attainable voltage.)

l. Press the ERASE button and adjust BS Op Level adjustment R2745 for a higher meter reading (after the erase

http://manoman.sqhill.com

cycle), until the nonstored background begins to fade up (display loses contrast) within 15 seconds. Note the meter reading (this is the upper writing limit). (If background fade up does not occur within 15 seconds, set to the highest obtainable voltage on the meter.)

m. ADJUST — BS Op Level adjustment R2745 for a meter reading midway between the upper writing limit and lower writing threshold (optimum bistable operation will normally occur at midrange, however some instruments may require a slightly higher or lower setting to achieve optimum view time; adjust R2745 as necessary).

n. Disconnect the voltmeter.

o. INTERACTION — Recheck parts c through h of this step.

p. Set the B INTENSITY control to midrange.

q. Set the time-base unit for auto mode triggering.

r. Press the REDUCED SCAN and STORE OFF buttons.

s. Set the time-base unit sweep magnifier to X10 and triggering level control for a stable display.

t. Set the low-frequency sine-wave generator output for a 6.4-division, 10-kilohertz display on the reduced scan graticule area.

u. Press the BISTABLE button.

v. Set the time-base unit for single-sweep operation.

w. Set the B INTENSITY control fully clockwise.

✓x. CHECK — Press the ERASE button and check that the signal will store anywhere within the reduced scan graticule area without trace fade out or background fade up within one minute. (This checks the reduced scan bistable writing speed at 0.2 division/microsecond.) If the conditions in this part cannot be met, return to part i of this step.

✓Performance Requirement check; see introductory information.

✓H2. Check Save Mode and Save Intensity Control

a. Press the ERASE button.

b. Press the SAVE button.

✓c. CHECK — Display will not erase when the ERASE button is pressed.

✓d. CHECK — Screen goes dark as the SAVE INTENSITY control is turned counterclockwise.

e. Press and release the SAVE button.

f. Disconnect all cables.

g. Press and release the REDUCED SCAN button.

✓H3. Check/Adjust Fast Bistable Operation (R2845, R2855)

a. Press the STORE OFF button.

b. Set the B INTENSITY control to midrange.

c. Set the time-base unit for auto mode triggering with ac coupling from the internal source at a sweep rate of 0.2 microsecond/division with X1 sweep magnification.

d. Connect the medium-frequency sine-wave generator to the amplifier unit.

e. Set the generator and amplifier controls for a 6.4-division, 2.5-megahertz display.

f. Set the time-base unit for single-sweep operation.

g. Set the B INTENSITY control fully clockwise.

h. Press the FAST BISTABLE button.

i. Turn the STORAGE LEVEL control to the 3 o'clock position.

http://manoman.sqhill.com

✓j. CHECK — Press the ERASE button and check that the sine wave will store anywhere within the center 6 x 8 divisions of the graticule area with little or no background spattering (indicated by mottling and uneven texture of the crt background lighting); use the STORAGE LEVEL control as necessary. (This checks the fast bistable writing speed at 50 divisions/microsecond.) If the conditions given in this check are met, proceed to part r of this step.

k. ADJUST — Repetitively press the ERASE button and set the Bistable (BS) Tsfr Level adjustment R2845 (see Figure 8-51) to the point where the lighted crt background begins to spatter.

l. Set the time-base unit triggering source switch to external.

m. Connect the precision dc voltmeter to the Fast Mesh test point TP2876 (see Figure 8-51).

n. Set the time-base unit triggering source switch to external.

✓o. CHECK — Press the ERASE button and wait one full minute. Then, set the triggering source switch to internal. If the stored waveform and crt background spatter are nearly the same as obtained in part k, proceed to part s of this step.

p. ADJUST — If the display observed in part o indicated additional spatter, press the ERASE button and set the Bistable (BS) Fast Prep adjustment R2855 (see Figure 8-51) for a more-positive meter reading (about 0.5 volt). If the display observed in part o indicated less spatter or portions of the waveform dropped out, set R2855 for a less-positive meter reading (about 0.5 volt).

q. Disconnect the precision dc voltmeter.

r. Set the time-base unit triggering source switch to internal and repeat parts j through o of this step.

s. ADJUST — Repetitively press the ERASE button and set the BS Tsfr Level adjustment R2845 (see Figure 8-51) to the point where spatter is just eliminated, and return to part a of this step.

t. Press the STORE OFF button.

u. Set the B INTENSITY control to midrange.

v. Set the time-base unit for auto mode triggering and 0.2 microsecond/division sweep rate with X10 sweep magnification.

w. Press the REDUCED SCAN button.

x. Set the medium-frequency sine-wave generator for a 6.4-division, 39-megahertz display on the reduced scan graticule area.

y. Set the time-base unit for single-sweep operation.

z. Set the B INTENSITY control fully clockwise.

aa. Press the FAST BISTABLE button.

✓ab. CHECK — Press the ERASE button and check that the sine wave will store anywhere within the reduced scan graticule area (this checks the reduced scan fast bistable writing speed at 780 divisions/microsecond); use the STORAGE LEVEL control as necessary. If the conditions given in this part cannot be met, return to part j of this step.

ac. Press and release the REDUCED SCAN button.

✓H4. Check Fast Variable Persistence Full Scan Writing Speed

a. Press the STORE OFF button.

b. Set the B INTENSITY control to midrange.

c. Set the time-base unit for auto mode triggering and sweep rate for 0.5 microsecond/division with X10 sweep magnification.

d. Connect the medium-frequency sine-wave generator to the amplifier unit and set for a 6.4-division, 15-megahertz display.

e. Set the time-base unit trigger level control for a stable display.

✓Performance Requirement check; see introductory information.

http://manoman.sqhill.com

f. Set the time-base unit for single-sweep operation.

g. Set the B INTENSITY control fully clockwise.

h. Set the STORAGE LEVEL control to the 3 o'clock position and the PERSISTENCE control fully clockwise.

i. Press the FAST VAR PERSIST button.

✓j. CHECK — Press the ERASE button and check that the sine wave will store, and can be viewed for at least 30 seconds, over the center 6 x 8 divisions of the Full Scan graticule area (this checks the Fast Variable Persistence writing speed at 300 divisions/microsecond; use the STORAGE LEVEL control as necessary). If the conditions given in this check are met, proceed to step H8.

H5. Adjust Variable Persistence Op Level and Prep Level (R2725, R2735)

a. Press the VAR PERSIST button.

b. Set B INTENSITY control fully counterclockwise and the STORAGE LEVEL control fully clockwise.

c. Set the time-base unit for auto mode triggering.

d. Connect a 10X probe from the test oscilloscope to the Front Mesh test point TP2839 (see Figure 8-51).

e. Set the test oscilloscope sweep rate for 1 millisecond/division and the vertical deflection factor for 0.5 volt/division (5 volts/division at probe tip) with dc input coupling.

f. Preset the Variable Persistence (VP) OP Level adjustment R2725 (see Figure 8-51) for the lowest possible voltage level on the Front Mesh test point TP2839 (approximately 0 volts). Disregard the 10-kilohertz signal.

g. Set the AUTO ERASE control fully clockwise. Preset the Variable Persistence (VP) Prep adjustment R2735 (see Figure 8-51) during the erase cycle, for the lowest possible voltage level on the Front Mesh test point TP2839 (approximately 0 volts). Disregard the pulse at the beginning of the erase cycle.

h. ADJUST — Set the AUTO ERASE control fully counterclockwise (in detent). Press the ERASE button and observe the crt screen. If the crt screen is dark or shaded areas are noticeable, set the VP OP Level adjustment R2725 for a more positive voltage level (in 3-volt steps) at the Front Mesh test point TP2839; press the ERASE push button and observe the crt screen. Repeat until a voltage level is reached where further increases in voltage at TP2839 cause no noticeable change in crt screen luminance (target saturated). If saturation cannot be achieved, set the Front Mesh test point TP2839 to the highest attainable voltage.

i. Set the STORAGE LEVEL control to the 3 o'clock position.

j. Repetitively press the ERASE button and preset VP Prep adjustment R2735 (see Figure 8-51) to the point where the crt screen is just completely dark after an erase cycle.

k. Press the FAST VAR button.

l. Move the jumper on P2531 to test connection P2849 (see Figure 8-51). Press the ERASE button and note that the crt screen is dark. (If the crt screen is not dark, preset the Variable Persistence (VP) Fast Prep adjustment R2850 to midrange.)

m. ADJUST — VP Prep Adjustment R2735 (see Figure 8-51) to the point where approximately 60% of the crt screen has a light-green background immediately after an erase cycle (should be viewed in dim ambient lighting).

H6. Adjust Fast Variable Persistence Front Mesh Stability (R2705)

a. Connect a 10X probe from the test oscilloscope to the Front Mesh test point TP2839 (see Figure 8-51).

b. Set the test oscilloscope sweep rate to 2 microseconds/division and the vertical deflection factor to 1 volt/division (10 volts/division at probe tip).

c. Press the ERASE button and observe the crt background luminance.

d. Set the time-base unit triggering for single-sweep operation and the source switch to external.

✓Performance Requirement check; see introductory information.]

http://manoman.sqhill.com

e. CHECK — Press the ERASE button and note the amplitude of the 2-microsecond-wide pump pulse on the Front Mesh test point TP2839 (as viewed on test oscilloscope); wait one minute and set the time-base unit triggering source switch to internal. The background luminance should remain the same as observed in part c. If the conditions of this check are met, proceed to step H7.

f. ADJUST — If the background is brighter after a one minute waiting period, increase the pump pulse amplitude a small amount with the Variable Persistence (VP) Fast Stability adjustment R2705 (see Figure 8-51); if the background is darker after the one minute waiting period, decrease the pump pulse amplitude a small amount with R2705. Repeat parts c through e to recheck.

g. Disconnect the 10X probe.

H7. Adjust Fast Variable Persistence Mesh Stability and Transfer Level (R2846, R2850)

a. Set the time-base unit triggering for auto mode with ac coupling from the internal source.

b. Move the test jumper on P2849 to P2848 (see Figure 8-51).

c. ADJUST — Repetitively press the ERASE button and adjust the Variable Persistence (VP) Tsfr Level adjustment R2846 (see Figure 8-51) until approximately 35% of the crt screen is illuminated after an erase cycle.

d. Turn the B INTENSITY control fully clockwise; press the ERASE button and notice the display.

e. Set the time-base unit for single-sweep operation and triggering source switch to external.

f. Press the ERASE button and wait one minute; then, set the triggering source switch to internal and notice the display.

g. Compare the crt display observed in part f with the display observed in part d; if there was little or no noticeable change in the crt display (background and trace), proceed to part k of this step.

h. Connect the precision dc voltmeter to the Fast Mesh test point TP2876 (see Figure 8-51).

i. Set the time-base unit triggering to external. Press the ERASE button and note the voltage level on the Fast Mesh test point TP2876.

j. ADJUST — If the crt display in part f faded up from that in part d, adjust Variable Persistence (VP) Fast Prep adjustment R2850 (see Figure 8-51) to lower the Fast Mesh test point TP2876 voltage by approximately 0.5 volt. If the crt display observed in part f faded down from the crt display observed in part d, adjust VP Fast Prep adjustment R2850 to increase the voltage on the Fast Mesh test point TP2876 by approximately 0.5 volt.

k. Disconnect the dc voltmeter.

l. Set the time-base unit triggering source switch to internal.

m. Turn the B INTENSITY control fully counterclockwise.

n. Repeat parts c through j of this step.

o. Move the jumper on P2848 to P2531 (see Figure 8-50).

p. INTERACTION — Recheck step H4.

✓H8. Check Fast Variable Persistence Reduced Scan Writing Speed

a. Press the STORE OFF button.

b. Connect the high-frequency sine-wave generator to the amplifier unit.

c. Set the B INTENSITY control to midrange.

d. Press the REDUCED SCAN button.

e. Set the time-base unit triggering for auto mode.

✓Performance Requirement check; see introductory information.]

http://manoman.sqhill.com

f. Set the time-base unit sweep rate to 20 nanoseconds/division with X10 sweep magnification (2 nanoseconds/division).

g. Set the generator and amplifier controls for a 6.4-division, 440-megahertz display on the reduced scan graticule area.

h. Set the time-base unit triggering level control for a stable display.

i. Set the time-base unit for single-sweep operation.

j. Set the B INTENSITY control fully clockwise.

k. Press the FAST VAR PERSIST button.

✓l. CHECK — Press the ERASE button; check that the waveform will store and can be viewed for at least 30 seconds anywhere within the reduced scan graticule area. (Use the STORAGE LEVEL control if necessary.) This checks variable persistence fast writing speed at 8,800 divisions/microsecond. If the conditions given in this check are not met return to step H5.

m. Disconnect all cables.

✓H9. Check Variable Persistence Operation

a. set the B INTENSITY control to midrange.

b. Press the STORE OFF button.

c. Set the time-base unit for auto triggering at a sweep rate of 10 microseconds/division with X1 sweep magnification.

d. Press and release the REDUCED SCAN button.

e. Connect the low-frequency sine-wave generator to the amplifier unit and set the generator for a 6.4-division, 100-kilohertz display.

f. Set the time-base unit for single-sweep operation.

g. Set the B INTENSITY control fully clockwise.

h. Press the VAR PERSIST button.

i. Set the PERSISTENCE control fully clockwise.

✓j. CHECK — Press the ERASE button and check that the waveform will store and can be viewed for at least 30 seconds in the center 6 x 8 divisions of the full scan graticule area; use the STORAGE LEVEL control if necessary. This checks the variable persistence writing speed at 2 divisions/microsecond. If the conditions given in this check are not met, return to step H5.

k. Set the B INTENSITY control to midrange.

l. Press the STORE OFF button.

m. Set time-base unit triggering for auto mode and sweep rate for 10 microseconds/division with X10 sweep magnification.

n. Press the REDUCED SCAN button.

o. Set the low-frequency signal generator for a 6.4-division, 600-kilohertz display on the reduced scan graticule area.

p. Set the time-base unit triggering level control for a stable display.

q. Set the time-base unit for single-sweep operation.

r. Set the B INTENSITY control fully clockwise.

s. Press the VAR PERSIST button.

✓t. CHECK — Press the ERASE button and check that the waveform will store and can be viewed for 30 seconds anywhere in the reduced scan graticule area. Use the STORAGE LEVEL control as necessary. This checks the reduced scan variable persistence writing speed at 12 divisions/microsecond. If the conditions in this step cannot be met return to step H5.

✓Performance Requirement check; see introductory information.]

http://manoman.sqhill.com

u. CHECK — Turn the PERSISTENCE control fully counterclockwise. Press the ERASE button and check that the background has a uniform light green glow and that the stored waveform fades out in approximately two seconds. Slowly turn the PERSISTENCE control clockwise and check that the background darkens. Leave the PERSISTENCE control fully clockwise.

v. Press and release the REDUCED SCAN button.

w. Disconnect all cables.

✓H10. Check Auto Erase

a. Place jumper P2531 in the Periodic Erase position as shown in Figure 8-50.

b. Turn the AUTO ERASE control fully clockwise (minimum view time).

c. Set the time-base unit triggering for auto mode and sweep rate for 0.2 second/division with X1 sweep magnification. Position the starting point of the trace to the first graticule line.

d. Set the B INTENSITY and STORAGE LEVEL controls for a usable display.

e. CHECK — Erase period is less than one second by observing the trace length to be less than five divisions.

f. Set the time-base unit sweep rate to 2 seconds/division.

g. Turn the AUTO ERASE control fully counterclockwise (but not in detent).

h. CHECK — Erase period is 10 seconds or greater as shown by a trace length of at least five divisions.

i. Place jumper P2531 in the Erase After Sweep position as shown in Figure 8-50. Set the time-base unit sweep rate to single sweep.

j. Turn the AUTO ERASE control fully clockwise.

✓k. CHECK — Erasure occurs only after the completion of a sweep.

l. Set the AUTO ERASE control to the OFF detent position.

✓m. CHECK — Crt screen no longer erases automatically.

n. Set the B INTENSITY control to midrange.

H11. Check Readout Storage Functions and Multi Trace Delay

a. Set the time-base unit for auto triggering and a 1 millisecond/division sweep rate.

b. Press the FAST VAR PERSIST button.

c. Set the MULTI TRACE DELAY control fully clockwise and check that the crt screen flashes approximately once every second.

d. Set the MULTI TRACE DELAY control fully counterclockwise (but not in the detent position) and check that the crt screen flashes at an interval of approximately four or more seconds.

e. Set the READOUT Intensity control fully clockwise (not in PULSED detent).

f. Press the FAST BISTABLE button.

g. Press the ERASE button and note that readout is not displayed.

h. Set the READOUT Intensity control to PULSED position and the MULTI TRACE DELAY control fully counterclockwise to the detent position.

i. CHECK — Readout display is visible (adjust PRESET adjustment if necessary for visible display).

j. Set the READOUT control fully counterclockwise to the OFF detent position and press the ERASE button.

✓Performance Requirement check; see introductory information.]

http://manoman.sqhill.com

k. CHECK — Readout is not displayed.

l. Turn the READOUT Intensity control fully clockwise (not in PULSED detent) and notice that readout is displayed.

m. Turn the READOUT intensity control fully counter-clockwise and press the FAST VAR PERSIST button.

n. CHECK — Press the ERASE button and turn the READOUT Intensity control fully clockwise (not in PULSED detent). Notice that no readout is displayed.

o. Set the READOUT Intensity control to OFF.

p. Press the BISTABLE push button and set the B INTENSITY control for a visible trace.

q. CHECK — Press the ERASE button and notice that the displayed trace is blanked during the ERASE cycle.

r. Press the STORE OFF button.

s. Press and release the POWER button.

This completes the Checks and Adjustments procedure. Disconnect all test equipment and replace the side panels.

http://manoman.sqhill.com

REPLACEABLE ELECTRICAL PARTS

PARTS ORDERING INFORMATION

Replacement parts are available from or through your local Tektronix, Inc. Field Office or representative.

Changes to Tektronix instruments are sometimes made to accommodate improved components as they become available, and to give you the benefit of the latest circuit improvements developed in our engineering department. It is therefore important, when ordering parts, to include the following information in your order: Part number, instrument type or number, serial number, and modification number if applicable.

If a part you have ordered has been replaced with a new or improved part, your local Tektronix, Inc. Field Office or representative will contact you concerning any change in part number.

Change information, if any, is located at the rear of this manual.

LIST OF ASSEMBLIES

A list of assemblies can be found at the beginning of the Electrical Parts List. The assemblies are listed in numerical order. When the complete component number of a part is known, this list will identify the assembly in which the part is located.

CROSS INDEX-MFR. CODE NUMBER TO MANUFACTURER

The Mfr. Code Number to Manufacturer index for the Electrical Parts List is located immediately after this page. The Cross Index provides codes, names and addresses of manufacturers of components listed in the Electrical Parts List.

ABBREVIATIONS

Abbreviations conform to American National Standard Y1.1.

COMPONENT NUMBER (column one of the Electrical Parts List)

A numbering method has been used to identify assemblies, subassemblies and parts. Examples of this numbering method and typical expansions are illustrated by the following:

Example a.

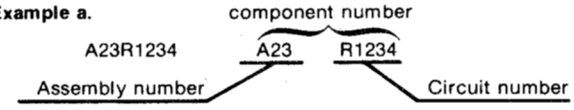

Read: Resistor 1234 of Assembly 23

Example b.

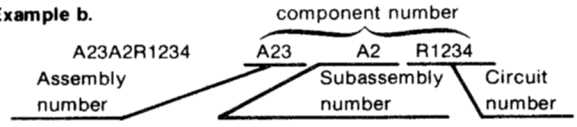

Read: Resistor 1234 of Subassembly 2 of Assembly 23

Only the circuit number will appear on the diagrams and circuit board illustrations. Each diagram and circuit board illustration is clearly marked with the assembly number. Assembly numbers are also marked on the mechanical exploded views located in the Mechanical Parts List. The component number is obtained by adding the assembly number prefix to the circuit number.

The Electrical Parts List is divided and arranged by assemblies in numerical sequence (e.g., assembly A1 with its subassemblies and parts, precedes assembly A2 with its subassemblies and parts).

Chassis-mounted parts have no assembly number prefix and are located at the end of the Electrical Parts List.

TEKTRONIX PART NO. (column two of the Electrical Parts List)

Indicates part number to be used when ordering replacement part from Tektronix.

SERIAL/MODEL NO. (columns three and four of the Electrical Parts List)

Column three (3) indicates the serial number at which the part was first used. Column four (4) indicates the serial number at which the part was removed. No serial number entered indicates part is good for all serial numbers.

NAME & DESCRIPTION (column five of the Electrical Parts List)

In the Parts List, an Item Name is separated from the description by a colon (:). Because of space limitations, an Item Name may sometimes appear as incomplete. For further Item Name identification, the U.S. Federal Cataloging Handbook H6-1 can be utilized where possible.

MFR. CODE (column six of the Electrical Parts List)

Indicates the code number of the actual manufacturer of the part. (Code to name and address cross reference can be found immediately after this page.)

MFR. PART NUMBER (column seven of the Electrical Parts List)

Indicates actual manufacturers part number.

http://manoman.sqhill.com

CROSS INDEX - MFR. CODE NUMBER TO MANUFACTURER

Mfr. Code	Manufacturer	Address	City, State, Zip Code
00213	NYTRONICS COMPONENTS GROUP INC SUBSIDIARY OF NYTRONICS INC	ORANGE ST	DARLINGTON SC 29532
00853	SANGAMO WESTON INC SANGAMO CAPACITOR DIV	SANGAMO RD P O BOX 128	PICKENS SC 29671
01121	ALLEN-BRADLEY CO	1201 SOUTH 2ND ST	MILWAUKEE WI 53204
01295	TEXAS INSTRUMENTS INC SEMICONDUCTOR GROUP	13500 N CENTRAL EXPRESSWAY P O BOX 225012 M/S 49	DALLAS TX 75265
02111	SPECTROL ELECTRONICS CORP SUB OF CARRIER CORP	17070 E GALE AVE P O BOX 1220	CITY OF INDUSTRY CA 91749
02114	AMPEREX ELECTRONIC CORP FERROXCUBE DIV	5083 KINGS HWY	SAUGERTIES NY 12477
02735	RCA CORP SOLID STATE DIVISION	ROUTE 202	SOMERVILLE NJ 08876
02777	HOPKINS ENGINEERING CO	12900 FOOTHILL BLVD	SAN FERNANDO CA 91342
03508	GENERAL ELECTRIC CO SEMI-CONDUCTOR PRODUCTS DEPT	W GENESEE ST	AUBURN NY 13021
04099	CAPCO INC	FORESIGHT INDUSTRIAL PARK P O BOX 2164	GRAND JUNCTION CO 81501
04222	AVX CERAMICS DIV OF AVX CORP	19TH AVE SOUTH P O BOX 867	MYRTLE BEACH SC 29577
04713	MOTOROLA INC SEMICONDUCTOR GROUP	5005 E MCDOWELL RD	PHOENIX AZ 85008
05397	UNION CARBIDE CORP MATERIALS SYSTEMS DIV	11901 MADISON AVE	CLEVELAND OH 44101
05828	GENERAL INSTRUMENT CORP GOVERNMENT SYSTEMS DIV	600 W JOHN ST	HICKSVILLE NY 11802
07263	FAIRCHILD CAMERA AND INSTRUMENT CORP SEMICONDUCTOR DIV	464 ELLIS ST	MOUNTAIN VIEW CA 94042
07716	TRW INC TRW ELECTRONICS COMPONENTS TRW IRC FIXED RESISTORS/BURLINGTON	2850 MT PLEASANT AVE	BURLINGTON IA 52601
11236	CTS OF BERNE INC	406 PARR ROAD	BERNE IN 46711
12697	CLAROSTAT MFG CO INC	LOWER WASHINGTON ST	DOVER NH 03820
12954	MICROSEMI CORP	8700 E THOMAS RD P O BOX 1390	SCOTTSDALE AZ 85252
12969	UNITRODE CORP	580 PLEASANT ST	WATERTOWN MA 02172
14193	CAL-R INC	1601 OLYMPIC BLVD	SANTA MONICA CA 90404
14433	ITT SEMICONDUCTORS DIV		WEST PALM BEACH FL
14552	MICRO/SEMICONDUCTOR CORP	2830 S FAIRVIEW ST	SANTA ANA CA 92704
14731	HARRIS CORP WEB PRESS DIV	P O BOX 515	WESTERLY RI 02891
14752	ELECTRO CUBE INC	1710 S DEL MAR AVE	SAN GABRIEL CA 91776
18324	SIGNETICS CORP	811 E ARQUES	SUNNYVALE CA 94086
19396	ILLINOIS TOOL WORKS INC PAKTRON DIVISION	900 FOLLIN LANE S E	VIENNA VA 22180
19701	MEPCO/ELECTRA INC A NORTH AMERICAN PHILIPS CO	P O BOX 760	MINERAL WELLS TX 76067
20932	KYOCERA INC	11620 SORRENTO VALLEY RD	SAN DIEGO CA 92121
21847	TRW MICROWAVE INC SUB OF TRW INC	825 STEWART DR	SUNNYVALE CA 94086
22526	DU PONT E I DE NEMOURS AND CO INC DU PONT CONNECTOR SYSTEMS	30 HUNTER LANE	CAMP HILL PA 17011
24546	CORNING GLASS WORKS	550 HIGH ST	BRADFORD PA 16701
25088	SIEMENS CORP	186 WOOD AVE S	ISELIN NJ 08830
25403	AMPEREX ELECTRONIC CORP SEMICONDUCTOR AND MICROCIRCUITS DIV	PROVIDENCE PIKE	SLATERSVILLE RI 02876
27014	NATIONAL SEMICONDUCTOR CORP	2900 SEMICONDUCTOR DR	SANTA CLARA CA 95051
31918	ITT SCHADOW INC	8081 WALLACE RD	EDEN PRAIRIE MN 55343
32159	WEST-CAP ARIZONA	2201 E ELVIRA ROAD	TUCSON AZ 85706
32997	BOURNS INC TRIMPOT DIV	1200 COLUMBIA AVE	RIVERSIDE CA 92507
44655	OHMITE MFG CO	3601 W HOWARD ST	SKOKIE IL 60076
50434	HEWLETT-PACKARD CO OPTOELECTRONICS DIV	640 PAGE MILL RD	PALO ALTO CA 94304
50558	ELECTRONIC CONCEPTS INC	526 INDUSTRIAL WAY WEST	EATONTOWN NJ 07724
51406	MURATA ERIE NORTH AMERICA INC GEORGIA OPERATIONS	1148 FRANKLIN RD SE	MARIETTA GA 30067
51642	CENTRE ENGINEERING INC	2820 E COLLEGE AVE	STATE COLLEGE PA 16801

http://manoman.sqhill.com

CROSS INDEX - MFR. CODE NUMBER TO MANUFACTURER

Mfr. Code	Manufacturer	Address	City, State, Zip Code
51984	NEC AMERICA INC	2741 PROSPERITY AVE	FAIRFAX VA 22031
52763	STETTNER ELECTRONICS INC	6135 AIRWAYS BLVD PO BOX 21947	CHATTANOOGA TN 37421
52769	SPRAGUE-GOODMAN ELECTRONICS INC	134 FULTON AVE	GARDEN CITY PARK NY 11040
54473	MATSUSHITA ELECTRIC CORP OF AMERICA	ONE PANASONIC WAY	SECAUCUS NJ 07094
54583	TDK ELECTRONICS CORP	755 EASTGATE BLVD	GARDEN CITY NY 11530
55112	WESTLAKE CAPACITORS INC	5334 STERLING CENTER DRIVE	WESTLAKE VILLAGE CA 91361
55680	NICHICON /AMERICA/ CORP	927 E STATE PKY	SCHAUMBURG IL 60195
56289	SPRAGUE ELECTRIC CO	87 MARSHALL ST	NORTH ADAMS MA 01247
57668	ROHM CORP	16931 MILLIKEN AVE	IRVINE CA 92713
58361	GENERAL INSTRUMENT CORP OPTOELECTRONICS DIV	3400 HILLVIEW AVE	PALO ALTO CA 94304
58854	GTE PRODUCTS CORP LIGHTING PRODUCTS GROUP	60 BOSTON ST	SALEM MA 01970
59660	TUSONIX INC	2155 N FORBES BLVD	TUCSON, ARIZONA 85705
59821	CENTRALAB INC SUB NORTH AMERICAN PHILIPS CORP	7158 MERCHANT AVE	EL PASO TX 79915
60211	VOLTAGE MULTIPLIERS INC	8711 WEST ROOSEVELT	VISALIA CA 93291
60705	CERA-MITE CORPORATION	1327 6TH AVE	GRAFTON WI 53024
71400	MCGRAW-EDISON CO BUSSMANN MFG DIV	502 EARTH CITY PLAZA P O BOX 14460	ST LOUIS MO 63178
71590	GLOBE-UNION INC CENTRALAB ELECTRONICS DIV	HWY 20 W P O BOX 858	FORT DODGE IA 50501
71707	COTO CORP	65 PAVILION AVE	PROVIDENCE RI 02905
73138	BECKMAN INSTRUMENTS INC HELIPOT DIV	2500 HARBOR BLVD	FULLERTON CA 92634
74970	JOHNSON E F CO	299 10TH AVE S W	WASECA MN 56093
75042	TRW INC TRW ELECTRONIC COMPONENTS IRC FIXED RESISTORS PHILADELPHIA DIV	401 N BROAD ST	PHILADELPHIA PA 19108
76493	BELL INDUSTRIES INC MILLER J W DIV	19070 REYES AVE P O BOX 5825	COMPTON CA 90224
77342	AMF INC POTTER AND BRUMFIELD DIV	200 RICHLAND CREEK DR	PRINCETON IN 47670
79727	C-W INDUSTRIES	550 DAVISVILLE RD P O BOX 96	WARMINSTER PA 18974
80009	TEKTRONIX INC	4900 S W GRIFFITH DR P O BOX 500	BEAVERTON OR 97077
80031	MEPCO/ELECTRA INC	22 COLUMBIA RD	MORRISTOWN NJ 07960
82389	SWITCHCRAFT INC SUB OF RAYTHEON CO	5555 N ELSTRON AVE	CHICAGO IL 60630
83003	VARO INC	2203 WALNUT ST P O BOX 401426	GARLAND TX 75040
91637	DALE ELECTRONICS INC	P O BOX 609	COLUMBUS NE 68601
92966	GTE PRODUCTS CORP LIGHTING PRODUCTS GROUP HILLSBORO MINIATURE LAMP PLANT	WEST MAIN ST	HILLSBORO NH 03244
TK0191	SONY TEKTRONIX	P. O. BOX 14, HANEDA AIRPORT	TOKYO, JAPAN
TK0213	TOPTRON CORP	TOKYO	JAPAN
TK0271	COMPONENT CONCEPTS INC	3229 PINE ST	EVERETT WA 98201
TK1450	TOKYO COSMOS ELECTRIC CO LTD	2-268 SOBUDAI ZAWA	KANAGAWA 228 JAPAN
TK1727	PHILIPS NEDERLAND BV AFD ELONCO	POSTBUS 90050	5600 PB EINDHOVEN THE NETHERLANDS

http://manoman.sqhill.com

Component No.	Tektronix Part No.	Serial/Assembly No. Effective	Dscont	Name & Description	Mfr. Code	Mfr. Part No.
A1	670-0702-06			CIRCUIT BD ASSY:GRATICULE LAMPS	80009	670-0702-06
A2	670-9179-00			CIRCUIT BD ASSY:CALIBRATOR AND MODE SWITCH	80009	670-9179-00
A3	672-0189-00			CIRCUIT BD ASSY:MAIN INTFC	80009	672-0189-00
A3A1	670-8051-00			CIRCUIT BD ASSY:FRONT PANEL DISPLAY	80009	670-8051-00
A3A2	670-8051-00			CIRCUIT BD ASSY:FRONT PANEL DISPLAY	80009	670-8051-00
A3A3	----- -----			CIRCUIT BD ASSY:MAIN INTERFACE (NOT AVAILABLE,ORDER A3)		
A6	670-9178-00			CIRCUIT BD ASSY:LOGIC	80009	670-9178-00
A7	670-9177-00			CIRCUIT BD ASSY:TRIGGER SELECT	80009	670-9177-00
A8	670-4769-20			CIRCUIT BD ASSY:VERTICAL CHANNEL SWITCH	80009	670-4769-20
A9	670-3959-01			CIRCUIT BD ASSY:X-Y COMP (OPTION 02 ONLY)	80009	670-3959-01
A10	670-3960-00			CIRCUIT BD ASSY:HORIZONTAL INTERCONNECT	80009	670-3960-00
A11	670-3958-01			CIRCUIT BD ASSY:HORIZONTAL INTERFACE	80009	670-3958-01
A12	614-0699-00			SIGNAL OUT ASSY:	80009	614-0699-00
A12A1	----- -----			CIRCUIT BD ASSY:SIGNALS OUT (NOT AVAILABLE,ORDER A12)		
A13	670-8622-03			CIRCUIT BD ASSY:READOUT	80009	670-8622-03
A14	620-0283-02			POWER SUPPLY:	80009	620-0283-02
A14A1	670-5959-04			CIRCUIT BD ASSY:CONTROLLED RECTIFIER	80009	670-5959-04
A14A2	670-5960-04			CIRCUIT BD ASSY:LV REGULATOR	80009	670-5960-04
A14A3	670-6259-02			CIRCUIT BD ASSY:INVERTER	80009	670-6259-02
A17	670-9175-00			CIRCUIT BD ASSY:INTENSITY CONTROL	80009	670-9175-00
A18	119-0757-00			DELAY LINE,ELEC:65NS,100 OHMS	80009	119-0757-00
A19	672-1176-00			CIRCUIT BD ASSY:VERT AMPL W/FLEX CONN	80009	672-1176-00
A19A1	----- -----			CIRCUIT BD ASSY:VERT AMP (NOT AVAILABLE,ORDER A19)		
A19A2	670-8046-00			CIRCUIT BD ASSY:FLEX CON (NO ELECTRICAL PARTS)	80009	670-8046-00
A20	670-9172-00			CIRCUIT BD ASSY:HORIZ AMP	80009	670-9172-00
A21	670-3970-00			CIRCUIT BD ASSY:Z AXIS	80009	670-3970-00
A22	670-9180-00			CIRCUIT BD ASSY:HIGH VOLTAGE	80009	670-9180-00
A23	670-9499-00			CIRCUIT BD ASSY:FOCUS	80009	670-9499-00
A24	670-9496-00			CIRCUIT BD ASSY:STORAGE MODE SWITCH	80009	670-9496-00
A25	670-9383-00			CIRCUIT BD ASSY:STORAGE	80009	670-9383-00
A26	670-9176-00			CIRCUIT BD ASSY:STORAGE CONTROL	80009	670-9176-00
A27	670-4778-01			CIRCUIT BD ASSY:TRIGGER LIGHT	80009	670-4778-01
A28	670-4778-01			CIRCUIT BD ASSY:TRIGGER LIGHT	80009	670-4778-01

http://manoman.sqhill.com

Component No.	Tektronix Part No.	Serial/Assembly No. Effective	Dscont	Name & Description	Mfr. Code	Mfr. Part No.
A1	670-0702-06			CIRCUIT BD ASSY:GRATICULE LAMPS	80009	670-0702-06
A1DS304	150-0097-00			LAMP,INCAND:6.3V,0.2A,#7381	92966	7381
A1DS305	150-0097-00			LAMP,INCAND:6.3V,0.2A,#7381	92966	7381
A1DS306	150-0097-00			LAMP,INCAND:6.3V,0.2A,#7381	92966	7381

http://manoman.sqhill.com

Component No.	Tektronix Part No.	Serial/Assembly No. Effective	Dscont	Name & Description	Mfr. Code	Mfr. Part No.
A2	670-9179-00			CIRCUIT BD ASSY:CALIBRATOR AND MODE SWITCH	80009	670-9179-00
A2C332	281-0788-00			CAP,FXD,CER DI:470PF,10%,100V	04222	MA101C471KAA
A2C336	281-0788-00			CAP,FXD,CER DI:470PF,10%,100V	04222	MA101C471KAA
A2C356	281-0775-00			CAP,FXD,CER DI:0.1UF,20%,50V	04222	MA205E104MAA
A2C357	281-0775-00			CAP,FXD,CER DI:0.1UF,20%,50V	04222	MA205E104MAA
A2C359	281-0775-00			CAP,FXD,CER DI:0.1UF,20%,50V	04222	MA205E104MAA
A2C376	285-1130-00			CAP,FXD,PLASTIC:0.22UF,1%,100V	50558	MH120224F
A2C384	281-0798-00			CAP,FXD,CER DI:51PF,1%,100V	04222	MA101A510GAA
A2C386	281-0798-00			CAP,FXD,CER DI:51PF,1%,100V	04222	MA101A510GAA
A2CR303	152-0141-02			SEMICOND DVC,DI:SW,SI,30V,150MA,30V,DO-35	03508	DA2527 (1N4152)
A2CR307	152-0141-02			SEMICOND DVC,DI:SW,SI,30V,150MA,30V,DO-35	03508	DA2527 (1N4152)
A2CR319	152-0141-02			SEMICOND DVC,DI:SW,SI,30V,150MA,30V,DO-35	03508	DA2527 (1N4152)
A2CR321	152-0141-02			SEMICOND DVC,DI:SW,SI,30V,150MA,30V,DO-35	03508	DA2527 (1N4152)
A2CR322	152-0141-02			SEMICOND DVC,DI:SW,SI,30V,150MA,30V,DO-35	03508	DA2527 (1N4152)
A2CR323	152-0141-02			SEMICOND DVC,DI:SW,SI,30V,150MA,30V,DO-35	03508	DA2527 (1N4152)
A2CR325	152-0141-02			SEMICOND DVC,DI:SW,SI,30V,150MA,30V,DO-35	03508	DA2527 (1N4152)
A2CR326	152-0141-02			SEMICOND DVC,DI:SW,SI,30V,150MA,30V,DO-35	03508	DA2527 (1N4152)
A2CR327	152-0141-02			SEMICOND DVC,DI:SW,SI,30V,150MA,30V,DO-35	03508	DA2527 (1N4152)
A2CR328	152-0141-02			SEMICOND DVC,DI:SW,SI,30V,150MA,30V,DO-35	03508	DA2527 (1N4152)
A2CR329	152-0141-02			SEMICOND DVC,DI:SW,SI,30V,150MA,30V,DO-35	03508	DA2527 (1N4152)
A2CR330	152-0141-02			SEMICOND DVC,DI:SW,SI,30V,150MA,30V,DO-35	03508	DA2527 (1N4152)
A2CR341	152-0141-02			SEMICOND DVC,DI:SW,SI,30V,150MA,30V,DO-35	03508	DA2527 (1N4152)
A2CR342	152-0141-02			SEMICOND DVC,DI:SW,SI,30V,150MA,30V,DO-35	03508	DA2527 (1N4152)
A2CR349	152-0141-02			SEMICOND DVC,DI:SW,SI,30V,150MA,30V,DO-35	03508	DA2527 (1N4152)
A2CR354	152-0141-02			SEMICOND DVC,DI:SW,SI,30V,150MA,30V,DO-35	03508	DA2527 (1N4152)
A2CR386	152-0141-02			SEMICOND DVC,DI:SW,SI,30V,150MA,30V,DO-35	03508	DA2527 (1N4152)
A2Q304	151-0341-00			TRANSISTOR:NPN,SI,TO-106	04713	SPS6919
A2Q308	151-0341-00			TRANSISTOR:NPN,SI,TO-106	04713	SPS6919
A2Q321	151-0223-00			TRANSISTOR:NPN,SI,TO-92	04713	SPS8026
A2Q325	151-0223-00			TRANSISTOR:NPN,SI,TO-92	04713	SPS8026
A2Q328	151-0223-00			TRANSISTOR:NPN,SI,TO-92	04713	SPS8026
A2Q332	151-0223-00			TRANSISTOR:NPN,SI,TO-92	04713	SPS8026
A2Q336	151-0223-00			TRANSISTOR:NPN,SI,TO-92	04713	SPS8026
A2Q346	151-0223-00			TRANSISTOR:NPN,SI,TO-92	04713	SPS8026
A2Q349	151-0223-00			TRANSISTOR:NPN,SI,TO-92	04713	SPS8026
A2Q354	151-0223-00			TRANSISTOR:NPN,SI,TO-92	04713	SPS8026
A2Q356	151-0223-00			TRANSISTOR:NPN,SI,TO-92	04713	SPS8026
A2Q376	151-0192-00			TRANSISTOR:SELECTED	04713	SPS8801
A2Q382	151-0192-00			TRANSISTOR:SELECTED	04713	SPS8801
A2Q384	151-0342-00			TRANSISTOR:PNP,SI,TO-92	07263	S035928
A2R303	315-0104-00			RES,FXD,FILM:100K OHM,5%,0.25W	57668	NTR25J-E100K
A2R304	315-0912-00			RES,FXD,FILM:9.1K OHM,5%,0.25W	57668	NTR25J-E09K1
A2R307	315-0104-00			RES,FXD,FILM:100K OHM,5%,0.25W	57668	NTR25J-E100K
A2R308	315-0912-00			RES,FXD,FILM:9.1K OHM,5%,0.25W	57668	NTR25J-E09K1
A2R319	315-0392-00			RES,FXD,FILM:3.9K OHM,5%,0.25W	57668	NTR25J-E03K9
A2R320	315-0122-00			RES,FXD,FILM:1.2K OHM,5%,0.25W	57668	NTR25J-E01K2
A2R321	315-0222-00			RES,FXD,FILM:2.2K OHM,5%,0.25W	57668	NTR25J-E02K2
A2R322	315-0302-00			RES,FXD,FILM:3K OHM,5%,0.25W	57668	NTR25J-E03K0
A2R323	315-0912-00			RES,FXD,FILM:9.1K OHM,5%,0.25W	57668	NTR25J-E09K1
A2R324	315-0302-00			RES,FXD,FILM:3K OHM,5%,0.25W	57668	NTR25J-E03K0
A2R325	315-0222-00			RES,FXD,FILM:2.2K OHM,5%,0.25W	57668	NTR25J-E02K2
A2R326	315-0103-00			RES,FXD,FILM:10K OHM,5%,0.25W	19701	5043CX10K00J
A2R327	315-0471-00			RES,FXD,FILM:470 OHM,5%,0.25W	57668	NTR25J-E470E
A2R328	315-0512-00			RES,FXD,FILM:5.1K OHM,5%,0.25W	57668	NTR25J-E05K1
A2R329	315-0912-00			RES,FXD,FILM:9.1K OHM,5%,0.25W	57668	NTR25J-E09K1
A2R331	315-0123-00			RES,FXD,FILM:12K OHM,5%,0.25W	57668	NTR25J-E12K0
A2R332	315-0103-00			RES,FXD,FILM:10K OHM,5%,0.25W	19701	5043CX10K00J
A2R334	315-0103-00			RES,FXD,FILM:10K OHM,5%,0.25W	19701	5043CX10K00J
A2R335	315-0123-00			RES,FXD,FILM:12K OHM,5%,0.25W	57668	NTR25J-E12K0

http://manoman.sqhill.com

Component No.	Tektronix Part No.	Serial/Assembly No. Effective	Dscont	Name & Description	Mfr. Code	Mfr. Part No.
A2R336	315-0103-00			RES,FXD,FILM:10K OHM,5%,0.25W	19701	5043CX10K00J
A2R342	315-0912-00			RES,FXD,FILM:9.1K OHM,5%,0.25W	57668	NTR25J-E09K1
A2R343	307-0109-00			RES,FXD,CMPSN:8.2 OHM,5%,0.25W	80009	307-0109-00
A2R344	307-0109-00			RES,FXD,CMPSN:8.2 OHM,5%,0.25W	80009	307-0109-00
A2R345	311-1373-00			RES,VAR,NONWW:PNL,5K OHM,1W	32997	81C1D-E20-BA0344
A2R346	315-0202-00			RES,FXD,FILM:2K OHM,5%,0.25W	57668	NTR25J-E 2K
A2R347	315-0162-00			RES,FXD,FILM:1.6K OHM,5%,0.25W	19701	5043CX1K600J
A2R348	307-0109-00			RES,FXD,CMPSN:8.2 OHM,5%,0.25W	80009	307-0109-00
A2R349	315-0202-00			RES,FXD,FILM:2K OHM,5%,0.25W	57668	NTR25J-E 2K
A2R351	307-0109-00			RES,FXD,CMPSN:8.2 OHM,5%,0.25W	80009	307-0109-00
A2R352	307-0109-00			RES,FXD,CMPSN:8.2 OHM,5%,0.25W	80009	307-0109-00
A2R354	315-0202-00			RES,FXD,FILM:2K OHM,5%,0.25W	57668	NTR25J-E 2K
A2R355	315-0162-00			RES,FXD,FILM:1.6K OHM,5%,0.25W	19701	5043CX1K600J
A2R356	315-0100-00			RES,FXD,FILM:10 OHM,5%,0.25W	19701	5043CX10RR00J
A2R357	315-0202-00			RES,FXD,FILM:2K OHM,5%,0.25W	57668	NTR25J-E 2K
A2R358	307-0109-00			RES,FXD,CMPSN:8.2 OHM,5%,0.25W	80009	307-0109-00
A2R360	315-0102-00			RES,FXD,FILM:1K OHM,5%,0.25W	57668	NTR25JE01K0
A2R361	315-0102-00			RES,FXD,FILM:1K OHM,5%,0.25W	57668	NTR25JE01K0
A2R362	315-0102-00			RES,FXD,FILM:1K OHM,5%,0.25W	57668	NTR25JE01K0
A2R364	315-0102-00			RES,FXD,FILM:1K OHM,5%,0.25W	57668	NTR25JE01K0
A2R365	315-0512-00			RES,FXD,FILM:5.1K OHM,5%,0.25W	57668	NTR25J-E05K1
A2R366	315-0512-00			RES,FXD,FILM:5.1K OHM,5%,0.25W	57668	NTR25J-E05K1
A2R368	315-0102-00			RES,FXD,FILM:1K OHM,5%,0.25W	57668	NTR25JE01K0
A2R369	315-0102-00			RES,FXD,FILM:1K OHM,5%,0.25W	57668	NTR25JE01K0
A2R370	315-0102-00			RES,FXD,FILM:1K OHM,5%,0.25W	57668	NTR25JE01K0
A2R371	315-0102-00			RES,FXD,FILM:1K OHM,5%,0.25W	57668	NTR25JE01K0
A2R372	315-0823-00			RES,FXD,FILM:82K OHM,5%,0.25W	57668	NTR25J-E82K
A2R373	321-0258-00			RES,FXD,FILM:4.75K OHM,1%,0.125W,TC=T0	19701	5033ED4K750F
A2R374	321-0822-06			RES,FXD,FILM:1.76K OHM,0.25%,0.125W,TC=T9	19701	5033RE1K760C
A2R375	311-2229-00			RES,VAR,NONWW:TRMR,250 OHM,20%,0.5W LINEAR	TK1450	GF06UT 250
A2R376	321-0321-07			RES,FXD,FILM:21.5K OHM,0.1%,0.125W,TC=T9	19701	5033RE21K50B
A2R380	315-0362-00			RES,FXD,FILM:3.6K OHM,5%,0.25W	19701	5043CX3K600J
A2R381	321-0321-07			RES,FXD,FILM:21.5K OHM,0.1%,0.125W,TC=T9	19701	5033RE21K50B
A2R382	315-0123-00			RES,FXD,FILM:12K OHM,5%,0.25W	57668	NTR25J-E12K0
A2R383	323-0289-00			RES,FXD,FILM:10.0K OHM,1%,0.5W,TC=T0	75042	CECT0-1002F
A2R384	323-0289-00			RES,FXD,FILM:10.0K OHM,1%,0.5W,TC=T0	75042	CECT0-1002F
A2R385	311-2231-00			RES,VAR,NONWW:TRMR,1K OHM,20%,0.5W	TK1450	GF06UT 1K
A2R386	315-0512-00			RES,FXD,FILM:5.1K OHM,5%,0.25W	57668	NTR25J-E05K1
A2R387	321-0164-00			RES,FXD,FILM:499 OHM,1%,0.125W,TC=T0	19701	5033ED499R0F
A2R388	321-1611-07			RES,FXD,FILM:550 OHM,0.1%,0.125W,TC=T9	19701	5033RE550R0B
A2R389	321-1008-04			RES,FXD,FILM:12.0 OHM,0.1%,0.125W,TC=T2	57668	CRB14 BYE 12 OHM
A2R392	321-1612-07			RES,FXD,FILM:4.455K OHM,0.1%,0.125W,TC=T9	19701	5033RE4K455B
A2R393	321-1611-07			RES,FXD,FILM:550 OHM,0.1%,0.125W,TC=T9	19701	5033RE550R0B
A2R394	321-1612-07			RES,FXD,FILM:4.455K OHM,0.1%,0.125W,TC=T9	19701	5033RE4K455B
A2R395	321-1611-07			RES,FXD,FILM:550 OHM,0.1%,0.125W,TC=T9	19701	5033RE550R0B
A2R396	321-1612-07			RES,FXD,FILM:4.455K OHM,0.1%,0.125W,TC=T9	19701	5033RE4K455B
A2R397	321-0813-07			RES,FXD,FILM:495 OHM,0.1%,0.125W,TC=T9	19701	5033RE4950B
A2S342	263-0021-00			SWITCH PB ASSY:4 LATCH,7.5MM,6 CONT,3 FR	80009	263-0021-00
A2S344	263-0022-00			SWITCH PB ASSY:5 LATCH,7.5MM,5 CONT,4 FR	80009	263-0022-00
A2S352	263-0013-10			SWITCH PB ASSY:3 LATCH,10 MM,M/3 CONTACTS	80009	263-0013-10
A2S354	263-0013-10			SWITCH PB ASSY:3 LATCH,10 MM,M/3 CONTACTS	80009	263-0013-10
A2S395	263-0013-08			SWITCH PB ASSY:3 LATCH,10MM,5 CONTACT	80009	263-0013-08
A2U322	156-0382-02			MICROCKT,DGTL:QUAD 2 INP NAND GATE BURN	18324	N74LS00NB
A2U326	156-0382-02			MICROCKT,DGTL:QUAD 2 INP NAND GATE BURN	18324	N74LS00NB
A2U330	156-0388-03			MICROCKT,DGTL:DUAL D FLIP-FLOP,SCRN	01295	SN74LS74ANP3
A2U332	156-0382-02			MICROCKT,DGTL:QUAD 2 INP NAND GATE BURN	18324	N74LS00NB
A2U334	156-0383-02			MICROCKT,DGTL:QUAD 2-INP NOR GATE,SCRN,	18324	N74LS02NB
A2U338	156-0382-02			MICROCKT,DGTL:QUAD 2 INP NAND GATE BURN	18324	N74LS00NB
A2U340	156-0386-02			MICROCKT,DGTL:TRIPLE 3-INP NAND GATE,SCRN	07263	74LS10PCQR

http://manoman.sqhill.com

Component No.	Tektronix Part No.	Serial/Assembly No. Effective	Dscont	Name & Description	Mfr. Code	Mfr. Part No.
A2U344	156-0382-02			MICROCKT,DGTL:QUAD 2 INP NAND GATE BURN	18324	N74LS00NB
A2U346	156-0382-02			MICROCKT,DGTL:QUAD 2 INP NAND GATE BURN	18324	N74LS00NB
A2U350	156-0386-02			MICROCKT,DGTL:TRIPLE 3-INP NAND GATE,SCRN	07263	74LS10PCQR

http://manoman.sqhill.com

Component No.	Tektronix Part No.	Serial/Assembly No. Effective	Dscont	Name & Description	Mfr. Code	Mfr. Part No.
A3	672-0189-00			CIRCUIT BD ASSY:MAIN INTFC	80009	672-0189-00

http://manoman.sqhill.com

Component No.	Tektronix Part No.	Serial/Assembly No. Effective	Dscont	Name & Description	Mfr. Code	Mfr. Part No.
A3A1	670-8051-00			CIRCUIT BD ASSY:FRONT PANEL DISPLAY	80009	670-8051-00

http://manoman.sqhill.com

Component No.	Tektronix Part No.	Serial/Assembly No. Effective	Dscont	Name & Description	Mfr. Code	Mfr. Part No.
A3A2	670-8051-00			CIRCUIT BD ASSY:FRONT PANEL DISPLAY	80009	670-8051-00

http://manoman.sqhill.com

Component No.	Tektronix Part No.	Serial/Assembly No. Effective	Dscont	Name & Description	Mfr. Code	Mfr. Part No.
A3A3	----- -----			CIRCUIT BD ASSY:MAIN INTERFACE (NOT AVAILABLE,ORDER A3)		
A3A3C29	281-0775-00			CAP,FXD,CER DI:0.1UF,20%,50V	04222	MA205E104MAA
A3A3C117	281-0775-00			CAP,FXD,CER DI:0.1UF,20%,50V	04222	MA205E104MAA
A3A3C135	281-0773-00			CAP,FXD,CER DI:0.01UF,10%,100V	04222	MA201C103KAA
A3A3C142	281-0775-00			CAP,FXD,CER DI:0.1UF,20%,50V	04222	MA205E104MAA
A3A3C145	290-0747-00			CAP,FXD,ELCTLT:100UF,+50-10%,25V	54473	ECE-B25V100L
A3A3C146	290-0769-00			CAP,FXD,ELCTLT:10UF,+50-10%,100VDC	54473	ECEB2AV100S
A3A3C147	290-0769-00			CAP,FXD,ELCTLT:10UF,+50-10%,100VDC	54473	ECEB2AV100S
A3A3C148	290-0747-00			CAP,FXD,ELCTLT:100UF,+50-10%,25V	54473	ECE-B25V100L
A3A3C149	290-0747-00			CAP,FXD,ELCTLT:100UF,+50-10%,25V	54473	ECE-B25V100L
A3A3C172	281-0774-00			CAP,FXD,CER DI:0.022MFD,20%,100V	04222	MA201E223MAA
A3A3C173	281-0774-00			CAP,FXD,CER DI:0.022MFD,20%,100V	04222	MA201E223MAA
A3A3C178	281-0775-00			CAP,FXD,CER DI:0.1UF,20%,50V	04222	MA205E104MAA
A3A3C920	283-0167-00			CAP,FXD,CER DI:0.1UF,10%,100V	04222	3430-100C-104K
A3A3CR18	152-0141-02			SEMICOND DVC,DI:SM,SI,30V,150MA,30V,DO-35	03508	DA2527 (1N4152)
A3A3CR21	152-0141-02			SEMICOND DVC,DI:SM,SI,30V,150MA,30V,DO-35	03508	DA2527 (1N4152)
A3A3CR22	152-0141-02			SEMICOND DVC,DI:SM,SI,30V,150MA,30V,DO-35	03508	DA2527 (1N4152)
A3A3CR23	152-0141-02			SEMICOND DVC,DI:SM,SI,30V,150MA,30V,DO-35	03508	DA2527 (1N4152)
A3A3CR24	152-0141-02			SEMICOND DVC,DI:SM,SI,30V,150MA,30V,DO-35	03508	DA2527 (1N4152)
A3A3CR25	152-0141-02			SEMICOND DVC,DI:SM,SI,30V,150MA,30V,DO-35	03508	DA2527 (1N4152)
A3A3CR26	152-0141-02			SEMICOND DVC,DI:SM,SI,30V,150MA,30V,DO-35	03508	DA2527 (1N4152)
A3A3CR27	152-0141-02			SEMICOND DVC,DI:SM,SI,30V,150MA,30V,DO-35	03508	DA2527 (1N4152)
A3A3CR28	152-0141-02			SEMICOND DVC,DI:SM,SI,30V,150MA,30V,DO-35	03508	DA2527 (1N4152)
A3A3CR31	152-0141-02			SEMICOND DVC,DI:SM,SI,30V,150MA,30V,DO-35	03508	DA2527 (1N4152)
A3A3CR32	152-0141-02			SEMICOND DVC,DI:SM,SI,30V,150MA,30V,DO-35	03508	DA2527 (1N4152)
A3A3CR33	152-0141-02			SEMICOND DVC,DI:SM,SI,30V,150MA,30V,DO-35	03508	DA2527 (1N4152)
A3A3CR34	152-0141-02			SEMICOND DVC,DI:SM,SI,30V,150MA,30V,DO-35	03508	DA2527 (1N4152)
A3A3CR35	152-0141-02			SEMICOND DVC,DI:SM,SI,30V,150MA,30V,DO-35	03508	DA2527 (1N4152)
A3A3CR36	152-0141-02			SEMICOND DVC,DI:SM,SI,30V,150MA,30V,DO-35	03508	DA2527 (1N4152)
A3A3CR37	152-0141-02			SEMICOND DVC,DI:SM,SI,30V,150MA,30V,DO-35	03508	DA2527 (1N4152)
A3A3CR38	152-0141-02			SEMICOND DVC,DI:SM,SI,30V,150MA,30V,DO-35	03508	DA2527 (1N4152)
A3A3CR41	152-0141-02			SEMICOND DVC,DI:SM,SI,30V,150MA,30V,DO-35	03508	DA2527 (1N4152)
A3A3CR42	152-0141-02			SEMICOND DVC,DI:SM,SI,30V,150MA,30V,DO-35	03508	DA2527 (1N4152)
A3A3CR43	152-0141-02			SEMICOND DVC,DI:SM,SI,30V,150MA,30V,DO-35	03508	DA2527 (1N4152)
A3A3CR44	152-0141-02			SEMICOND DVC,DI:SM,SI,30V,150MA,30V,DO-35	03508	DA2527 (1N4152)
A3A3CR45	152-0141-02			SEMICOND DVC,DI:SM,SI,30V,150MA,30V,DO-35	03508	DA2527 (1N4152)
A3A3CR46	152-0141-02			SEMICOND DVC,DI:SM,SI,30V,150MA,30V,DO-35	03508	DA2527 (1N4152)
A3A3CR47	152-0141-02			SEMICOND DVC,DI:SM,SI,30V,150MA,30V,DO-35	03508	DA2527 (1N4152)
A3A3CR48	152-0141-02			SEMICOND DVC,DI:SM,SI,30V,150MA,30V,DO-35	03508	DA2527 (1N4152)
A3A3CR51	152-0141-02			SEMICOND DVC,DI:SM,SI,30V,150MA,30V,DO-35	03508	DA2527 (1N4152)
A3A3CR52	152-0141-02			SEMICOND DVC,DI:SM,SI,30V,150MA,30V,DO-35	03508	DA2527 (1N4152)
A3A3CR53	152-0141-02			SEMICOND DVC,DI:SM,SI,30V,150MA,30V,DO-35	03508	DA2527 (1N4152)
A3A3CR54	152-0141-02			SEMICOND DVC,DI:SM,SI,30V,150MA,30V,DO-35	03508	DA2527 (1N4152)
A3A3CR55	152-0141-02			SEMICOND DVC,DI:SM,SI,30V,150MA,30V,DO-35	03508	DA2527 (1N4152)
A3A3CR56	152-0141-02			SEMICOND DVC,DI:SM,SI,30V,150MA,30V,DO-35	03508	DA2527 (1N4152)
A3A3CR57	152-0141-02			SEMICOND DVC,DI:SM,SI,30V,150MA,30V,DO-35	03508	DA2527 (1N4152)
A3A3CR58	152-0141-02			SEMICOND DVC,DI:SM,SI,30V,150MA,30V,DO-35	03508	DA2527 (1N4152)
A3A3CR114	152-0141-02			SEMICOND DVC,DI:SM,SI,30V,150MA,30V,DO-35	03508	DA2527 (1N4152)
A3A3CR124	152-0141-02			SEMICOND DVC,DI:SM,SI,30V,150MA,30V,DO-35	03508	DA2527 (1N4152)
A3A3CR128	152-0141-02			SEMICOND DVC,DI:SM,SI,30V,150MA,30V,DO-35	03508	DA2527 (1N4152)
A3A3CR136	152-0141-02			SEMICOND DVC,DI:SM,SI,30V,150MA,30V,DO-35	03508	DA2527 (1N4152)
A3A3CR138	152-0141-02			SEMICOND DVC,DI:SM,SI,30V,150MA,30V,DO-35	03508	DA2527 (1N4152)
A3A3CR142	152-0141-02			SEMICOND DVC,DI:SM,SI,30V,150MA,30V,DO-35	03508	DA2527 (1N4152)
A3A3CR152	152-0141-02			SEMICOND DVC,DI:SM,SI,30V,150MA,30V,DO-35	03508	DA2527 (1N4152)
A3A3CR156	152-0141-02			SEMICOND DVC,DI:SM,SI,30V,150MA,30V,DO-35	03508	DA2527 (1N4152)
A3A3CR162	152-0141-02			SEMICOND DVC,DI:SM,SI,30V,150MA,30V,DO-35	03508	DA2527 (1N4152)
A3A3CR164	152-0141-02			SEMICOND DVC,DI:SM,SI,30V,150MA,30V,DO-35	03508	DA2527 (1N4152)
A3A3CR172	152-0141-02			SEMICOND DVC,DI:SM,SI,30V,150MA,30V,DO-35	03508	DA2527 (1N4152)

http://manoman.sqhill.com

Component No.	Tektronix Part No.	Serial/Assembly No. Effective	Dscont	Name & Description	Mfr. Code	Mfr. Part No.
A3A3CR180	152-0141-02			SEMICOND DVC,DI:SW,SI,30V,150MA,30V,DO-35	03508	DA2527 (1N4152)
A3A3CR181	152-0141-02			SEMICOND DVC,DI:SW,SI,30V,150MA,30V,DO-35	03508	DA2527 (1N4152)
A3A3CR184	152-0141-02			SEMICOND DVC,DI:SW,SI,30V,150MA,30V,DO-35	03508	DA2527 (1N4152)
A3A3CR212	152-0141-02			SEMICOND DVC,DI:SW,SI,30V,150MA,30V,DO-35	03508	DA2527 (1N4152)
A3A3CR213	152-0141-02			SEMICOND DVC,DI:SW,SI,30V,150MA,30V,DO-35	03508	DA2527 (1N4152)
A3A3CR214	152-0141-02			SEMICOND DVC,DI:SW,SI,30V,150MA,30V,DO-35	03508	DA2527 (1N4152)
A3A3CR215	152-0141-02			SEMICOND DVC,DI:SW,SI,30V,150MA,30V,DO-35	03508	DA2527 (1N4152)
A3A3CR216	152-0141-02			SEMICOND DVC,DI:SW,SI,30V,150MA,30V,DO-35	03508	DA2527 (1N4152)
A3A3CR217	152-0141-02			SEMICOND DVC,DI:SW,SI,30V,150MA,30V,DO-35	03508	DA2527 (1N4152)
A3A3CR218	152-0141-02			SEMICOND DVC,DI:SW,SI,30V,150MA,30V,DO-35	03508	DA2527 (1N4152)
A3A3CR219	152-0141-02			SEMICOND DVC,DI:SW,SI,30V,150MA,30V,DO-35	03508	DA2527 (1N4152)
A3A3Q60	151-0190-00			TRANSISTOR:NPN,SI,TO-92	80009	151-0190-00
A3A3Q182	151-0341-01			TRANSISTOR:PNP,SI,TO-92	57668	4ABXC22BCP0341
A3A3R18	315-0202-00			RES,FXD,FILM:2K OHM,5%,0.25W	57668	NTR25J-E 2K
A3A3R22	307-0106-00			RES,FXD,CMPSN:4.7 OHM,5%,0.25W	01121	CB 47G5
A3A3R24	307-0106-00			RES,FXD,CMPSN:4.7 OHM,5%,0.25W	01121	CB 47G5
A3A3R26	307-0106-00			RES,FXD,CMPSN:4.7 OHM,5%,0.25W	01121	CB 47G5
A3A3R28	307-0106-00			RES,FXD,CMPSN:4.7 OHM,5%,0.25W	01121	CB 47G5
A3A3R29	315-0471-00			RES,FXD,FILM:470 OHM,5%,0.25W	57668	NTR25J-E470E
A3A3R32	307-0106-00			RES,FXD,CMPSN:4.7 OHM,5%,0.25W	01121	CB 47G5
A3A3R34	307-0106-00			RES,FXD,CMPSN:4.7 OHM,5%,0.25W	01121	CB 47G5
A3A3R36	307-0106-00			RES,FXD,CMPSN:4.7 OHM,5%,0.25W	01121	CB 47G5
A3A3R38	307-0106-00			RES,FXD,CMPSN:4.7 OHM,5%,0.25W	01121	CB 47G5
A3A3R42	307-0106-00			RES,FXD,CMPSN:4.7 OHM,5%,0.25W	01121	CB 47G5
A3A3R44	307-0106-00			RES,FXD,CMPSN:4.7 OHM,5%,0.25W	01121	CB 47G5
A3A3R46	307-0106-00			RES,FXD,CMPSN:4.7 OHM,5%,0.25W	01121	CB 47G5
A3A3R48	307-0106-00			RES,FXD,CMPSN:4.7 OHM,5%,0.25W	01121	CB 47G5
A3A3R52	307-0106-00			RES,FXD,CMPSN:4.7 OHM,5%,0.25W	01121	CB 47G5
A3A3R54	307-0106-00			RES,FXD,CMPSN:4.7 OHM,5%,0.25W	01121	CB 47G5
A3A3R56	307-0106-00			RES,FXD,CMPSN:4.7 OHM,5%,0.25W	01121	CB 47G5
A3A3R58	307-0106-00			RES,FXD,CMPSN:4.7 OHM,5%,0.25W	01121	CB 47G5
A3A3R60	315-0102-00			RES,FXD,FILM:1K OHM,5%,0.25W	57668	NTR25JE01K0
A3A3R61	315-0202-00			RES,FXD,FILM:2K OHM,5%,0.25W	57668	NTR25J-E 2K
A3A3R67	321-0260-00			RES,FXD,FILM:4.99K OHM,1%,0.125W,TC=T0	19701	5033ED4K990F
A3A3R68	321-0260-00			RES,FXD,FILM:4.99K OHM,1%,0.125W,TC=T0	19701	5033ED4K990F
A3A3R87	321-0260-00			RES,FXD,FILM:4.99K OHM,1%,0.125W,TC=T0	19701	5033ED4K990F
A3A3R88	321-0260-00			RES,FXD,FILM:4.99K OHM,1%,0.125W,TC=T0	19701	5033ED4K990F
A3A3R102	315-0510-00			RES,FXD,FILM:51 OHM,5%,0.25W	19701	5043CX51R00J
A3A3R112	315-0510-00			RES,FXD,FILM:51 OHM,5%,0.25W	19701	5043CX51R00J
A3A3R117	315-0101-00			RES,FXD,FILM:100 OHM,5%,0.25W	57668	NTR25J-E 100E
A3A3R121	315-0510-00			RES,FXD,FILM:51 OHM,5%,0.25W	19701	5043CX51R00J
A3A3R122	315-0510-00			RES,FXD,FILM:51 OHM,5%,0.25W	19701	5043CX51R00J
A3A3R123	315-0510-00			RES,FXD,FILM:51 OHM,5%,0.25W	19701	5043CX51R00J
A3A3R126	315-0122-00			RES,FXD,FILM:1.2K OHM,5%,0.25W	57668	NTR25J-E01K2
A3A3R127	315-0122-00			RES,FXD,FILM:1.2K OHM,5%,0.25W	57668	NTR25J-E01K2
A3A3R128	321-0239-00			RES,FXD,FILM:3.01K OHM,1%,0.125W,TC=T0	19701	5043ED3K010F
A3A3R131	315-0510-00			RES,FXD,FILM:51 OHM,5%,0.25W	19701	5043CX51R00J
A3A3R132	315-0510-00			RES,FXD,FILM:51 OHM,5%,0.25W	19701	5043CX51R00J
A3A3R133	315-0510-00			RES,FXD,FILM:51 OHM,5%,0.25W	19701	5043CX51R00J
A3A3R135	315-0105-00			RES,FXD,FILM:1M OHM,5%,0.25W	19701	5043CX1M000J
A3A3R136	315-0152-00			RES,FXD,FILM:1.5K OHM,5%,0.25W	57668	NTR25J-E01K5
A3A3R138	315-0243-00			RES,FXD,FILM:24K OHM,5%,0.25W	57668	NTR25J-E24K0
A3A3R142	315-0104-00			RES,FXD,FILM:100K OHM,5%,0.25W	57668	NTR25J-E100K
A3A3R144	315-0152-00			RES,FXD,FILM:1.5K OHM,5%,0.25W	57668	NTR25J-E01K5
A3A3R152	315-0102-00			RES,FXD,FILM:1K OHM,5%,0.25W	57668	NTR25JE01K0
A3A3R153	315-0102-00			RES,FXD,FILM:1K OHM,5%,0.25W	57668	NTR25JE01K0
A3A3R156	315-0102-00			RES,FXD,FILM:1K OHM,5%,0.25W	57668	NTR25JE01K0
A3A3R157	315-0102-00			RES,FXD,FILM:1K OHM,5%,0.25W	57668	NTR25JE01K0
A3A3R162	315-0182-00			RES,FXD,FILM:1.8K OHM,5%,0.25W	57668	NTR25J-E1K8

http://manoman.sqhill.com

Component No.	Tektronix Part No.	Serial/Assembly No. Effective	Dscont	Name & Description	Mfr. Code	Mfr. Part No.
A3A3R164	315-0182-00			RES,FXD,FILM:1.8K OHM,5%,0.25W	57668	NTR25J-E1K8
A3A3R172	315-0472-00			RES,FXD,FILM:4.7K OHM,5%,0.25W	57668	NTR25J-E04K7
A3A3R173	315-0122-00			RES,FXD,FILM:1.2K OHM,5%,0.25W	57668	NTR25J-E01K2
A3A3R174	315-0122-00			RES,FXD,FILM:1.2K OHM,5%,0.25W	57668	NTR25J-E01K2
A3A3R178	315-0101-00			RES,FXD,FILM:100 OHM,5%,0.25W	57668	NTR25J-E 100E
A3A3R180	315-0272-00			RES,FXD,FILM:2.7K OHM,5%,0.25W	57668	NTR25J-E02K7
A3A3R181	315-0272-00			RES,FXD,FILM:2.7K OHM,5%,0.25W	57668	NTR25J-E02K7
A3A3R182	315-0122-00			RES,FXD,FILM:1.2K OHM,5%,0.25W	57668	NTR25J-E01K2
A3A3R183	315-0153-00			RES,FXD,FILM:15K OHM,5%,0.25W	19701	5043CX15K00J
A3A3R184	301-0102-00			RES,FXD,FILM:1K OHM,5%,0.50W	19701	5053CX1K000J
A3A3R186	315-0472-00			RES,FXD,FILM:4.7K OHM,5%,0.25W	57668	NTR25J-E04K7
A3A3R187	315-0391-00			RES,FXD,FILM:390 OHM,5%,0.25W	57668	NTR25J-E390E
A3A3R192	321-0231-00			RES,FXD,FILM:2.49K OHM,1%,0.125W,TC=T0	19701	5033ED2K49F
A3A3R193	321-0231-00			RES,FXD,FILM:2.49K OHM,1%,0.125W,TC=T0	19701	5033ED2K49F
A3A3R194	315-0132-00			RES,FXD,FILM:1.3K OHM,5%,0.25W	57668	NTR25J-E01K3
A3A3R195	315-0132-00			RES,FXD,FILM:1.3K OHM,5%,0.25W	57668	NTR25J-E01K3
A3A3R196	315-0132-00			RES,FXD,FILM:1.3K OHM,5%,0.25W	57668	NTR25J-E01K3
A3A3R201	315-0102-00			RES,FXD,FILM:1K OHM,5%,0.25W	57668	NTR25JE01K0
A3A3R202	315-0102-00			RES,FXD,FILM:1K OHM,5%,0.25W	57668	NTR25JE01K0
A3A3R203	315-0102-00			RES,FXD,FILM:1K OHM,5%,0.25W	57668	NTR25JE01K0
A3A3R204	315-0102-00			RES,FXD,FILM:1K OHM,5%,0.25W	57668	NTR25JE01K0
A3A3R212	315-0751-00			RES,FXD,FILM:750 OHM,5%,0.25W	57668	NTR25J-E750E
A3A3R213	315-0751-00			RES,FXD,FILM:750 OHM,5%,0.25W	57668	NTR25J-E750E
A3A3R214	315-0751-00			RES,FXD,FILM:750 OHM,5%,0.25W	57668	NTR25J-E750E
A3A3R215	315-0751-00			RES,FXD,FILM:750 OHM,5%,0.25W	57668	NTR25J-E750E
A3A3R216	315-0751-00			RES,FXD,FILM:750 OHM,5%,0.25W	57668	NTR25J-E750E
A3A3R217	315-0751-00			RES,FXD,FILM:750 OHM,5%,0.25W	57668	NTR25J-E750E
A3A3R218	315-0751-00			RES,FXD,FILM:750 OHM,5%,0.25W	57668	NTR25J-E750E
A3A3R219	315-0751-00			RES,FXD,FILM:750 OHM,5%,0.25W	57668	NTR25J-E750E
A3A3R227	315-0511-00			RES,FXD,FILM:510 OHM,5%,0.25W	19701	5043CX510R0J
A3A3R228	315-0511-00			RES,FXD,FILM:510 OHM,5%,0.25W	19701	5043CX510R0J
A3A3R229	315-0511-00			RES,FXD,FILM:510 OHM,5%,0.25W	19701	5043CX510R0J
A3A3R241	321-0344-00			RES,FXD,FILM:37.4K OHM,1%,0.125W,TC=T0	19701	5033ED 37K40F
A3A3R242	321-0356-00			RES,FXD,FILM:49.9K OHM,1%,0.125W,TC=T0	19701	5033ED49K90F
A3A3R243	321-0306-00			RES,FXD,FILM:15.0K OHM,1%,0.125W,TC=T0	19701	5033ED15J00F
A3A3R244	321-0373-00			RES,FXD,FILM:75.0K OHM,1%,0.125W,TC=T0	19701	5033ED75K00F
A3A3R245	321-0311-00			RES,FXD,FILM:16.9K OHM,1%,0.125W,TC=T0	07716	CEAC16901F
A3A3R246	321-0356-00			RES,FXD,FILM:49.9K OHM,1%,0.125W,TC=T0	19701	5033ED49K90F
A3A3R247	321-0321-00			RES,FXD,FILM:21.5K OHM,1%,0.125W,TC=T0	07716	CEAD21501F
A3A3R248	321-0335-00			RES,FXD,FILM:30.1K OHM,1%,0.125W,TC=T0	57668	RB14FXE30K1
A3A3R264	315-0752-00			RES,FXD,FILM:7.5K OHM,5%,0.25W	57668	NTR25J-E07K5
A3A3U92	156-0043-03			MICROCKT,DGTL:QUAD 2-INP NOR GATE,SCRN	18324	N7402(NB OR FB)
A3A3U3232	155-0015-01			MICROCKT,DGTL:ANALOG DATA SWITCH	80009	155-0015-01
A3A3U3262	155-0015-01			MICROCKT,DGTL:ANALOG DATA SWITCH	80009	155-0015-01

http://manoman.sqhill.com

Component No.	Tektronix Part No.	Serial/Assembly No. Effective	Dscont	Name & Description	Mfr. Code	Mfr. Part No.
A6	670-9178-00			CIRCUIT BD ASSY:LOGIC	80009	670-9178-00
A6C4301	290-0778-00			CAP,FXD,ELCTLT:1UF,+50 -10%,50V,NPLZD	54473	ECE-A50N1
A6C4302	290-0973-00			CAP,FXD,ELCTLT:100UF,20%,25VDC	55680	ULB1E101MEA
A6C4303	290-0778-00			CAP,FXD,ELCTLT:1UF,+50 -10%,50V,NPLZD	54473	ECE-A50N1
A6C4304	290-0778-00			CAP,FXD,ELCTLT:1UF,+50 -10%,50V,NPLZD	54473	ECE-A50N1
A6C4305	283-0177-00			CAP,FXD,CER DI:1UF,+80-20%,25V	04222	SR302E105ZAATR
A6C4314	281-0809-00			CAP,FXD,CER DI:200 PF,5%,100V	04222	MA101A201JAA
A6C4315	281-0936-00			CAP,FXD,CER DI:39PF,5%,100V	04222	MA101A390JAA
A6C4316	283-0005-02			CAP,FXD,CER DI:0.01UF,+80%-20%,250V	54583	FK26Z5U2D103Z-T
A6C4336	281-0936-00			CAP,FXD,CER DI:39PF,5%,100V	04222	MA101A390JAA
A6C4343	281-0819-00			CAP,FXD,CER DI:33 PF,5%,50V	04222	GC105A330J
A6C4345	281-0819-00			CAP,FXD,CER DI:33 PF,5%,50V	04222	GC105A330J
A6C4346	281-0788-00			CAP,FXD,CER DI:470PF,10%,100V	04222	MA101C471KAA
A6C4347	283-0638-00			CAP,FXD,MICA DI:130PF,1%,100V	00853	D155F131F0
A6C4348	281-0788-00			CAP,FXD,CER DI:470PF,10%,100V	04222	MA101C471KAA
A6C4420	281-0936-00			CAP,FXD,CER DI:39PF,5%,100V	04222	MA101A390JAA
A6C4423	281-0936-00			CAP,FXD,CER DI:39PF,5%,100V	04222	MA101A390JAA
A6C4441	281-0936-00			CAP,FXD,CER DI:39PF,5%,100V	04222	MA101A390JAA
A6C4449	283-0005-02			CAP,FXD,CER DI:0.01UF,+80%-20%,250V	54583	FK26Z5U2D103Z-T
A6C4461	283-0604-00			CAP,FXD,MICA DI:304PF,2%,500V	00853	D155F304G0
A6C4467	283-0604-00			CAP,FXD,MICA DI:304PF,2%,500V	00853	D155F304G0
A6C4471	283-0177-00			CAP,FXD,CER DI:1UF,+80-20%,25V	04222	SR302E105ZAATR
A6C4482	281-0812-00			CAP,FXD,CER DI:1000PF,10%,100V	04222	MA101C102KAA
A6C4483	281-0812-00			CAP,FXD,CER DI:1000PF,10%,100V	04222	MA101C102KAA
A6C4492	283-0177-00			CAP,FXD,CER DI:1UF,+80-20%,25V	04222	SR302E105ZAATR
A6C4494	281-0814-00			CAP,FXD,CER DI:100 PF,10%,100V	04222	MA101A101KAA
A6C4497	281-0812-00			CAP,FXD,CER DI:1000PF,10%,100V	04222	MA101C102KAA
A6CR4322	152-0141-02			SEMICOND DVC,DI:SW,SI,30V,150MA,30V,DO-35	03508	DA2527 (1N4152)
A6CR4323	152-0141-02			SEMICOND DVC,DI:SW,SI,30V,150MA,30V,DO-35	03508	DA2527 (1N4152)
A6CR4354	152-0141-02			SEMICOND DVC,DI:SW,SI,30V,150MA,30V,DO-35	03508	DA2527 (1N4152)
A6CR4355	152-0141-02			SEMICOND DVC,DI:SW,SI,30V,150MA,30V,DO-35	03508	DA2527 (1N4152)
A6CR4356	152-0141-02			SEMICOND DVC,DI:SW,SI,30V,150MA,30V,DO-35	03508	DA2527 (1N4152)
A6CR4357	152-0141-02			SEMICOND DVC,DI:SW,SI,30V,150MA,30V,DO-35	03508	DA2527 (1N4152)
A6CR4368	152-0141-02			SEMICOND DVC,DI:SW,SI,30V,150MA,30V,DO-35	03508	DA2527 (1N4152)
A6CR4369	152-0141-02			SEMICOND DVC,DI:SW,SI,30V,150MA,30V,DO-35	03508	DA2527 (1N4152)
A6CR4420	152-0141-02			SEMICOND DVC,DI:SW,SI,30V,150MA,30V,DO-35	03508	DA2527 (1N4152)
A6CR4423	152-0141-02			SEMICOND DVC,DI:SW,SI,30V,150MA,30V,DO-35	03508	DA2527 (1N4152)
A6CR4433	152-0141-02			SEMICOND DVC,DI:SW,SI,30V,150MA,30V,DO-35	03508	DA2527 (1N4152)
A6CR4434	152-0141-02			SEMICOND DVC,DI:SW,SI,30V,150MA,30V,DO-35	03508	DA2527 (1N4152)
A6CR4448	152-0141-02			SEMICOND DVC,DI:SW,SI,30V,150MA,30V,DO-35	03508	DA2527 (1N4152)
A6CR4449	152-0141-02			SEMICOND DVC,DI:SW,SI,30V,150MA,30V,DO-35	03508	DA2527 (1N4152)
A6CR4461	152-0141-02			SEMICOND DVC,DI:SW,SI,30V,150MA,30V,DO-35	03508	DA2527 (1N4152)
A6CR4467	152-0141-02			SEMICOND DVC,DI:SW,SI,30V,150MA,30V,DO-35	03508	DA2527 (1N4152)
A6CR4472	152-0141-02			SEMICOND DVC,DI:SW,SI,30V,150MA,30V,DO-35	03508	DA2527 (1N4152)
A6CR4473	152-0333-00			SEMICOND DVC,DI:SW,SI,55V,200MA,DO-35	07263	FDH-6012
A6CR4474	152-0333-00			SEMICOND DVC,DI:SW,SI,55V,200MA,DO-35	07263	FDH-6012
A6CR4483	152-0141-02			SEMICOND DVC,DI:SW,SI,30V,150MA,30V,DO-35	03508	DA2527 (1N4152)
A6CR4484	152-0141-02			SEMICOND DVC,DI:SW,SI,30V,150MA,30V,DO-35	03508	DA2527 (1N4152)
A6CR4486	152-0141-02			SEMICOND DVC,DI:SW,SI,30V,150MA,30V,DO-35	03508	DA2527 (1N4152)
A6CR4487	152-0153-00			SEMICOND DVC,DI:SW,SI,10V,50MA,.DO-7	07263	FD7003
A6CR4488	152-0153-00			SEMICOND DVC,DI:SW,SI,10V,50MA,.DO-7	07263	FD7003
A6L4301	108-1246-00			COIL,RF:FXD,3.9UH,10%	54583	SPT 0406-3R9K-6
A6L4302	108-1246-00			COIL,RF:FXD,3.9UH,10%	54583	SPT 0406-3R9K-6
A6L4303	108-1246-00			COIL,RF:FXD,3.9UH,10%	54583	SPT 0406-3R9K-6
A6L4304	108-1246-00			COIL,RF:FXD,3.9UH,10%	54583	SPT 0406-3R9K-6
A6L4317	108-1246-00			COIL,RF:FXD,3.9UH,10%	54583	SPT 0406-3R9K-6
A6L4342	108-1246-00			COIL,RF:FXD,3.9UH,10%	54583	SPT 0406-3R9K-6
A6L4344	108-1246-00			COIL,RF:FXD,3.9UH,10%	54583	SPT 0406-3R9K-6
A6LR4338	108-0543-00			COIL,RF:FIXED,1.1UH	80009	108-0543-00

http://manoman.sqhill.com

Component No.	Tektronix Part No.	Serial/Assembly No. Effective	Dscont	Name & Description	Mfr. Code	Mfr. Part No.
A6LR4359	108-0543-00			COIL,RF:FIXED,1.1UH	80009	108-0543-00
A6LR4368	108-0543-00			COIL,RF:FIXED,1.1UH	80009	108-0543-00
A6LR4412	108-0543-00			COIL,RF:FIXED,1.1UH	80009	108-0543-00
A6Q4336	151-0198-00			TRANSISTOR:SELECTED	04713	SPS8802-1
A6Q4364	151-0198-00			TRANSISTOR:SELECTED	04713	SPS8802-1
A6Q4374	151-0188-00			TRANSISTOR:PNP,SI,TO-92	80009	151-0188-00
A6Q4382	151-0192-00			TRANSISTOR:SELECTED	04713	SPS8801
A6Q4392	151-0192-00			TRANSISTOR:SELECTED	04713	SPS8801
A6Q4424	151-0198-00			TRANSISTOR:SELECTED	04713	SPS8802-1
A6Q4432	151-0223-00			TRANSISTOR:NPN,SI,TO-92	04713	SPS8026
A6Q4438	151-0192-00			TRANSISTOR:SELECTED	04713	SPS8801
A6Q4442	151-0192-00			TRANSISTOR:SELECTED	04713	SPS8801
A6Q4448	151-0216-00			TRANSISTOR:PNP,SI,TO-92	04713	SPS8803
A6Q4456	151-1022-00			TRANSISTOR:FET,N-CHAN,SI,TO-18	80009	151-1022-00
A6Q4462	151-0190-00			TRANSISTOR:NPN,SI,TO-92	80009	151-0190-00
A6Q4468	151-0190-00			TRANSISTOR:NPN,SI,TO-92	80009	151-0190-00
A6Q4474	151-0192-00			TRANSISTOR:SELECTED	04713	SPS8801
A6Q4488	151-0188-00			TRANSISTOR:PNP,SI,TO-92	80009	151-0188-00
A6R4303	315-0100-00			RES,FXD,FILM:10 OHM,5%,0.25W	19701	5043CX10RR00J
A6R4304	315-0223-00			RES,FXD,FILM:22K OHM,5%,0.25W	19701	5043CX22K00J92U
A6R4305	321-0193-00			RES,FXD,FILM:1K OHM,1%,0.125W,TC=T0	19701	5033ED1K00F
A6R4306	315-0223-00			RES,FXD,FILM:22K OHM,5%,0.25W	19701	5043CX22K00J92U
A6R4307	321-0193-00			RES,FXD,FILM:1K OHM,1%,0.125W,TC=T0	19701	5033ED1K00F
A6R4312	321-0147-00			RES,FXD,FILM:332 OHM,1%,0.125W,TC=T0	07716	CEAD332R0F
A6R4313	321-0239-00			RES,FXD,FILM:3.01K OHM,1%,0.125W,TC=T0	19701	5043ED3K010F
A6R4314	315-0912-00			RES,FXD,FILM:9.1K OHM,5%,0.25W	57668	NTR25J-E09K1
A6R4315	315-0512-00			RES,FXD,FILM:5.1K OHM,5%,0.25W	57668	NTR25J-E05K1
A6R4316	315-0101-00			RES,FXD,FILM:100 OHM,5%,0.25W	57668	NTR25J-E 100E
A6R4318	315-0101-00			RES,FXD,FILM:100 OHM,5%,0.25W	57668	NTR25J-E 100E
A6R4319	315-0512-00			RES,FXD,FILM:5.1K OHM,5%,0.25W	57668	NTR25J-E05K1
A6R4320	321-0304-00			RES,FXD,FILM:14.3K OHM,1%,0.125W,TC=T0	19701	5033ED14K30F
A6R4321	315-0332-00			RES,FXD,FILM:3.3K OHM,5%,0.25W	57668	NTR25J-E03K3
A6R4322	315-0202-00			RES,FXD,FILM:2K OHM,5%,0.25W	57668	NTR25J-E 2K
A6R4333	315-0682-00			RES,FXD,FILM:6.8K OHM,5%,0.25W	57668	NTR25J-E06K8
A6R4334	315-0303-00			RES,FXD,FILM:30K OHM,5%,0.25W	19701	5043CX30K00J
A6R4335	315-0512-00			RES,FXD,FILM:5.1K OHM,5%,0.25W	57668	NTR25J-E05K1
A6R4336	315-0752-00			RES,FXD,FILM:7.5K OHM,5%,0.25W	57668	NTR25J-E07K5
A6R4342	315-0271-00			RES,FXD,FILM:270 OHM,5%,0.25W	57668	NTR25J-E270E
A6R4343	315-0332-00			RES,FXD,FILM:3.3K OHM,5%,0.25W	57668	NTR25J-E03K3
A6R4344	315-0271-00			RES,FXD,FILM:270 OHM,5%,0.25W	57668	NTR25J-E270E
A6R4345	315-0332-00			RES,FXD,FILM:3.3K OHM,5%,0.25W	57668	NTR25J-E03K3
A6R4355	315-0332-00			RES,FXD,FILM:3.3K OHM,5%,0.25W	57668	NTR25J-E03K3
A6R4358	315-0101-00			RES,FXD,FILM:100 OHM,5%,0.25W	57668	NTR25J-E 100E
A6R4363	315-0102-00			RES,FXD,FILM:1K OHM,5%,0.25W	57668	NTR25JE01K0
A6R4366	315-0332-00			RES,FXD,FILM:3.3K OHM,5%,0.25W	57668	NTR25J-E03K3
A6R4367	315-0101-00			RES,FXD,FILM:100 OHM,5%,0.25W	57668	NTR25J-E 100E
A6R4369	315-0202-00			RES,FXD,FILM:2K OHM,5%,0.25W	57668	NTR25J-E 2K
A6R4374	315-0103-00			RES,FXD,FILM:10K OHM,5%,0.25W	19701	5043CX10K00J
A6R4380	315-0302-00			RES,FXD,FILM:3K OHM,5%,0.25W	57668	NTR25J-E03K0
A6R4381	315-0303-00			RES,FXD,FILM:30K OHM,5%,0.25W	19701	5043CX30K00J
A6R4382	315-0122-00			RES,FXD,FILM:1.2K OHM,5%,0.25W	57668	NTR25J-E01K2
A6R4390	315-0301-00			RES,FXD,FILM:300 OHM,5%,0.25W	57668	NTR25J-E300E
A6R4391	315-0102-00			RES,FXD,FILM:1K OHM,5%,0.25W	57668	NTR25JE01K0
A6R4392	315-0202-00			RES,FXD,FILM:2K OHM,5%,0.25W	57668	NTR25J-E 2K
A6R4394	315-0100-00			RES,FXD,FILM:10 OHM,5%,0.25W	19701	5043CX10RR00J
A6R4413	315-0332-00			RES,FXD,FILM:3.3K OHM,5%,0.25W	57668	NTR25J-E03K3
A6R4420	315-0153-00			RES,FXD,FILM:15K OHM,5%,0.25W	19701	5043CX15K00J
A6R4423	315-0201-00			RES,FXD,FILM:200 OHM,5%,0.25W	57668	NTR25J-E200E
A6R4424	315-0512-00			RES,FXD,FILM:5.1K OHM,5%,0.25W	57668	NTR25J-E05K1

http://manoman.sqhill.com

Component No.	Tektronix Part No.	Serial/Assembly No. Effective	Dscont	Name & Description	Mfr. Code	Mfr. Part No.
A6R4425	315-0391-00			RES,FXD,FILM:390 OHM,5%,0.25W	57668	NTR25J-E390E
A6R4426	315-0102-00			RES,FXD,FILM:1K OHM,5%,0.25W	57668	NTR25JE01K0
A6R4427	315-0102-00			RES,FXD,FILM:1K OHM,5%,0.25W	57668	NTR25JE01K0
A6R4428	315-0152-00			RES,FXD,FILM:1.5K OHM,5%,0.25W	57668	NTR25J-E01K5
A6R4431	315-0152-00			RES,FXD,FILM:1.5K OHM,5%,0.25W	57668	NTR25J-E01K5
A6R4432	315-0222-00			RES,FXD,FILM:2.2K OHM,5%,0.25W	57668	NTR25J-E02K2
A6R4437	315-0103-00			RES,FXD,FILM:10K OHM,5%,0.25W	19701	5043CX10K00J
A6R4438	315-0821-00			RES,FXD,FILM:820 OHM,5%,0.25W	19701	5043CX820R0J
A6R4441	315-0822-00			RES,FXD,FILM:8.2K OHM,5%,0.25W	19701	5043CX8K200J
A6R4442	315-0132-00			RES,FXD,FILM:1.3K OHM,5%,0.25W	57668	NTR25J-E01K3
A6R4448	315-0271-00			RES,FXD,FILM:270 OHM,5%,0.25W	57668	NTR25J-E270E
A6R4449	315-0302-00			RES,FXD,FILM:3K OHM,5%,0.25W	57668	NTR25J-E03K0
A6R4456	321-0237-00			RES,FXD,FILM:2.87K OHM,1%,0.125W,TC=T0	07716	CEAD 28700F
A6R4457	315-0332-00			RES,FXD,FILM:3.3K OHM,5%,0.25W	57668	NTR25J-E03K3
A6R4461	321-0288-00			RES,FXD,FILM:9.76K OHM,1%,0.125W,TC=T0	19701	5033ED9K760F
A6R4462	321-0246-00			RES,FXD,FILM:3.57K OHM,1%,0.125W,TC=T0	19701	5043ED3K570F
A6R4467	321-0288-00			RES,FXD,FILM:9.76K OHM,1%,0.125W,TC=T0	19701	5033ED9K760F
A6R4468	321-0246-00			RES,FXD,FILM:3.57K OHM,1%,0.125W,TC=T0	19701	5043ED3K570F
A6R4471	321-0245-00			RES,FXD,FILM:3.48K OHM,1%,0.125W,TC=T0	19701	5033ED3K48F
A6R4472	315-0151-00			RES,FXD,FILM:150 OHM,5%,0.25W	57668	NTR25J-E150E
A6R4473	301-0471-00			RES,FXD,FILM:470 OHM,5%,0.5W	19701	5053CX 470R0J
A6R4474	322-0210-00			RES,FXD,FILM:1.50K OHM,1%,0.25W,TC=T0	75042	CEBT0-1501F
A6R4475	315-0361-00			RES,FXD,FILM:360 OHM,5%,0.25W	19701	5043CX360R0J
A6R4476	315-0221-00			RES,FXD,FILM:220 OHM,5%,0.25W	57668	NTR25J-E220E
A6R4477	315-0302-00			RES,FXD,FILM:3K OHM,5%,0.25W	57668	NTR25J-E03K0
A6R4478	315-0182-00			RES,FXD,FILM:1.8K OHM,5%,0.25W	57668	NTR25J-E1K8
A6R4479	321-0289-00			RES,FXD,FILM:10.0K OHM,1%,0.125W,TC=T0	19701	5033ED10K0F
A6R4480	311-2269-00			RES,VAR,NONWW:TRMR,20K OHM,20%,0.5W	TK1450	GF06VT 20 K OHM
A6R4481	321-0240-00			RES,FXD,FILM:3.09K OHM,1%,0.125W,TC=T0	07716	CEAD30900F
A6R4482	315-0100-00			RES,FXD,FILM:10 OHM,5%,0.25W	19701	5043CX10RR00J
A6R4483	315-0103-00			RES,FXD,FILM:10K OHM,5%,0.25W	19701	5043CX10K00J
A6R4484	315-0683-00			RES,FXD,FILM:68K OHM,5%,0.25W	57668	NTR25J-E68K0
A6R4485	321-0237-00			RES,FXD,FILM:2.87K OHM,1%,0.125W,TC=T0	07716	CEAD 28700F
A6R4486	315-0242-00			RES,FXD,FILM:2.4K OHM,5%,0.25W	57668	NTR25J-E02K4
A6R4487	315-0103-00			RES,FXD,FILM:10K OHM,5%,0.25W	19701	5043CX10K00J
A6R4488	315-0751-00			RES,FXD,FILM:750 OHM,5%,0.25W	57668	NTR25J-E750E
A6R4489	321-0312-00			RES,FXD,FILM:17.4K OHM,1%,0.125W,TC=T0	19701	5033ED17K40F
A6R4490	315-0101-00			RES,FXD,FILM:100 OHM,5%,0.25W	57668	NTR25J-E 100E
A6R4491	315-0201-00			RES,FXD,FILM:200 OHM,5%,0.25W	57668	NTR25J-E200E
A6R4492	315-0152-00			RES,FXD,FILM:1.5K OHM,5%,0.25W	57668	NTR25J-E01K5
A6R4493	321-0215-00			RES,FXD,FILM:1.69K OHM,1%,0.125W,TC=T0	07716	CEAD16900F
A6R4494	315-0622-00			RES,FXD,FILM:6.2K OHM,5%,0.25W	19701	5043CX6K200J
A6R4495	315-0622-00			RES,FXD,FILM:6.2K OHM,5%,0.25W	19701	5043CX6K200J
A6R4496	321-0242-00			RES,FXD,FILM:3.24K OHM,1%,0.125W,TC=T0	19701	5043ED3K240F
A6R4497	315-0272-00			RES,FXD,FILM:2.7K OHM,5%,0.25W	57668	NTR25J-E02K7
A6R4498	321-0243-00			RES,FXD,FILM:3.32K OHM,1%,0.125W,TC=T0	19701	5033ED3K32F
A6U4320	155-0011-00			MICROCKT,DGTL:CLOCK & CHOP BLANKING	80009	155-0011-00
A6U4340	155-0010-00			MICROCKT,DGTL:CHOP COUNTER	80009	155-0010-00
A6U4358	155-0013-00			MICROCKT,DGTL:DC BINARY	80009	155-0013-00
A6U4368	155-0013-00			MICROCKT,DGTL:DC BINARY	80009	155-0013-00
A6U4412	155-0013-00			MICROCKT,DGTL:DC BINARY	80009	155-0013-00
A6U4428	155-0009-00			MICROCKT,DGTL:HORIZ LOCKOUT LGC	80009	155-0009-00
A6U4494	155-0012-00			MICROCKT,DGTL:Z-AXIS AMPLIFIER	80009	155-0012-00
A6VR4334	152-0166-00			SEMICOND DVC,DI:ZEN,SI,6.2V,5%,0.4W,DO-7	04713	SZ11738RL

http://manoman.sqhill.com

Component No.	Tektronix Part No.	Serial/Assembly No. Effective	Dscont	Name & Description	Mfr. Code	Mfr. Part No.
A7	670-9177-00			CIRCUIT BD ASSY:TRIGGER SELECT	80009	670-9177-00
A7C1	283-0114-00			CAP,FXD,CER DI:1500PF,5%,200V	59660	805-534-Y5D0152J
A7C2	283-0114-00			CAP,FXD,CER DI:1500PF,5%,200V	59660	805-534-Y5D0152J
A7C3	281-0808-00			CAP,FXD,CER DI:7 PF,20%,100V	04222	MA101A7R04AA
A7C4	283-0159-00			CAP,FXD,CER DI:18PF,5%,50V	04222	SR155A180JAA
A7C5	283-0114-00			CAP,FXD,CER DI:1500PF,5%,200V	59660	805-534-Y5D0152J
A7C6	283-0114-00			CAP,FXD,CER DI:1500PF,5%,200V	59660	805-534-Y5D0152J
A7C7	281-0808-00			CAP,FXD,CER DI:7 PF,20%,100V	04222	MA101A7R04AA
A7C8	281-0773-00			CAP,FXD,CER DI:0.01UF,10%,100V	04222	MA201C103KAA
A7C9	283-0175-00			CAP,FXD,CER DI:10PF,5%,200V	05397	C312C100D2G5CA 8
A7CR1	152-0141-02			SEMICOND DVC,DI:SW,SI,30V,150MA,30V,DO-35	03508	DA2527 (1N4152)
A7CR2	152-0141-02			SEMICOND DVC,DI:SW,SI,30V,150MA,30V,DO-35	03508	DA2527 (1N4152)
A7L1	108-0328-00			COIL,RF:FIXED,0.3UH	80009	108-0328-00
A7L2	108-0328-00			COIL,RF:FIXED,0.3UH	80009	108-0328-00
A7L9	108-0328-00			COIL,RF:FIXED,0.3UH	80009	108-0328-00
A7L10	108-0328-00			COIL,RF:FIXED,0.3UH	80009	108-0328-00
A7Q1	151-0302-00			TRANSISTOR:NPN,SI,TO-18	04713	ST899
A7Q2	151-0302-00			TRANSISTOR:NPN,SI,TO-18	04713	ST899
A7Q3	151-0369-00			TRANSISTOR:PNP,SI,X-55	04713	SPS8273
A7Q4	151-0369-00			TRANSISTOR:PNP,SI,X-55	04713	SPS8273
A7Q5	151-0294-00			TRANSISTOR:PNP,SI,U-43	04713	SMT1014
A7Q6	151-0294-00			TRANSISTOR:PNP,SI,U-43	04713	SMT1014
A7Q7	151-0294-00			TRANSISTOR:PNP,SI,U-43	04713	SMT1014
A7Q8	151-0294-00			TRANSISTOR:PNP,SI,U-43	04713	SMT1014
A7R1	321-0164-00			RES,FXD,FILM:499 OHM,1%,0.125W,TC=T0	19701	5033ED499R0F
A7R2	321-0164-00			RES,FXD,FILM:499 OHM,1%,0.125W,TC=T0	19701	5033ED499R0F
A7R3	321-0164-00			RES,FXD,FILM:499 OHM,1%,0.125W,TC=T0	19701	5033ED499R0F
A7R4	321-0164-00			RES,FXD,FILM:499 OHM,1%,0.125W,TC=T0	19701	5033ED499R0F
A7R5	325-0053-00			RES,FXD,FILM:50 OHM,1%,0.05W,TC=T0	91637	CMF50-F50R00F
A7R6	325-0053-00			RES,FXD,FILM:50 OHM,1%,0.05W,TC=T0	91637	CMF50-F50R00F
A7R7	325-0053-00			RES,FXD,FILM:50 OHM,1%,0.05W,TC=T0	91637	CMF50-F50R00F
A7R8	325-0053-00			RES,FXD,FILM:50 OHM,1%,0.05W,TC=T0	91637	CMF50-F50R00F
A7R9	325-0053-00			RES,FXD,FILM:50 OHM,1%,0.05W,TC=T0	91637	CMF50-F50R00F
A7R10	325-0053-00			RES,FXD,FILM:50 OHM,1%,0.05W,TC=T0	91637	CMF50-F50R00F
A7R11	321-0202-00			RES,FXD,FILM:1.24K OHM,1%,0.125W,TC=T0	24546	NA55D1241F
A7R12	321-0170-00			RES,FXD,FILM:576 OHM,1%,0.125W,TC=T0	07716	CEAD576R0F
A7R13	322-0111-00			RES,FXD,FILM:140 OHM,1%,0.25W,TC=T0	91637	MFF1421G140R0F
A7R14	321-0202-00			RES,FXD,FILM:1.24K OHM,1%,0.125W,TC=T0	24546	NA55D1241F
A7R15	301-0271-00			RES,FXD,FILM:270 OHM,5%,0.5W	19701	5053CX270R0J
A7R16	301-0271-00			RES,FXD,FILM:270 OHM,5%,0.5W	19701	5053CX270R0J
A7R17	315-0102-00			RES,FXD,FILM:1K OHM,5%,0.25W	57668	NTR25JE01K0
A7R18	321-0202-00			RES,FXD,FILM:1.24K OHM,1%,0.125W,TC=T0	24546	NA55D1241F
A7R19	321-0170-00			RES,FXD,FILM:576 OHM,1%,0.125W,TC=T0	07716	CEAD576R0F
A7R20	321-0202-00			RES,FXD,FILM:1.24K OHM,1%,0.125W,TC=T0	24546	NA55D1241F
A7R21	322-0111-00			RES,FXD,FILM:140 OHM,1%,0.25W,TC=T0	91637	MFF1421G140R0F
A7R22	315-0103-00			RES,FXD,FILM:10K OHM,5%,0.25W	19701	5043CX10K00J
A7R23	321-0289-00			RES,FXD,FILM:10.0K OHM,1%,0.125W,TC=T0	19701	5033ED10K0F
A7R24	321-0260-00			RES,FXD,FILM:4.99K OHM,1%,0.125W,TC=T0	19701	5033ED4K990F
A7R25	315-0103-00			RES,FXD,FILM:10K OHM,5%,0.25W	19701	5043CX10K00J
A7R26	321-0051-00			RES,FXD,FILM:33.2 OHM,1%,0.125W,TC=T0	91637	CMF55116G33R20F
A7R27	321-0181-00			RES,FXD,FILM:750 OHM,1%,0.125W,TC=T0	07716	CEAD750R0F
A7R28	311-2275-00			RES,VAR,NONWW:TRMR,200 OHM,20%,0.5W	TK1450	GF06VT 200 OHM
A7R29	321-0181-00			RES,FXD,FILM:750 OHM,1%,0.125W,TC=T0	07716	CEAD750R0F
A7R30	321-0051-00			RES,FXD,FILM:33.2 OHM,1%,0.125W,TC=T0	91637	CMF55116G33R20F
A7R31	315-0302-00			RES,FXD,FILM:3K OHM,5%,0.25W	57668	NTR25J-E03K0
A7R32	315-0511-00			RES,FXD,FILM:510 OHM,5%,0.25W	19701	5043CX510R0J
A7R33	321-0219-00			RES,FXD,FILM:1.87K OHM,1%,0.125W,TC=T0	07716	CEAD18700F
A7R34	321-0221-00			RES,FXD,FILM:1.96K OHM,1%,0.125W,TC=T0	19701	5043ED1K960F
A7R35	315-0151-00			RES,FXD,FILM:150 OHM,5%,0.25W	57668	NTR25J-E150E

http://manoman.sqhill.com

Component No.	Tektronix Part No.	Serial/Assembly No. Effective	Dscont	Name & Description	Mfr. Code	Mfr. Part No.
A7R36	315-0100-00			RES,FXD,FILM:10 OHM,5%,0.25W	19701	5043CX10RR00J
A7R37	315-0100-00			RES,FXD,FILM:10 OHM,5%,0.25W	19701	5043CX10RR00J
A7R38	321-0026-00			RES,FXD,FILM:18.2 OHM,1%,0.125W,TC=T0	57668	RB14FXE 18E2
A7R39	321-0026-00			RES,FXD,FILM:18.2 OHM,1%,0.125W,TC=T0	57668	RB14FXE 18E2
A7R40	315-0510-00			RES,FXD,FILM:51 OHM,5%,0.25W	19701	5043CX51R00J
A7R41	311-2257-00			RES,VAR,NONWW:TRMR,500 OHM,20%,0.5W	TK1450	GF06VT 500 OHM
A7R42	315-0510-00			RES,FXD,FILM:51 OHM,5%,0.25W	19701	5043CX51R00J
A7R43	323-0165-00			RES,FXD,FILM:511 OHM,1%,0.5W,TC=T0	24546	NA65D5110F
A7R44	311-2275-00			RES,VAR,NONWW:TRMR,200 OHM,20%,0.5W	TK1450	GF06VT 200 OHM
A7R45	323-0165-00			RES,FXD,FILM:511 OHM,1%,0.5W,TC=T0	24546	NA65D5110F
A7R46	315-0151-00			RES,FXD,FILM:150 OHM,5%,0.25W	57668	NTR25J-E150E
A7R47	315-0151-00			RES,FXD,FILM:150 OHM,5%,0.25W	57668	NTR25J-E150E
A7R48	321-0075-00			RES,FXD,FILM:59.0 OHM,1%,0.125W,TC=T0	91637	CMF55116G59R00F
A7R49	323-0193-00			RES,FXD,FILM:1K OHM,1%,0.5W,TC=T0	75042	CECT0-1001F
A7R50	321-0075-00			RES,FXD,FILM:59.0 OHM,1%,0.125W,TC=T0	91637	CMF55116G59R00F
A7R51	323-0193-00			RES,FXD,FILM:1K OHM,1%,0.5W,TC=T0	75042	CECT0-1001F
A7R52	321-0164-00			RES,FXD,FILM:499 OHM,1%,0.125W,TC=T0	19701	5033ED499R0F
A7R53	321-0164-00			RES,FXD,FILM:499 OHM,1%,0.125W,TC=T0	19701	5033ED499R0F
A7R54	315-0103-00			RES,FXD,FILM:10K OHM,5%,0.25W	19701	5043CX10K00J
A7R55	321-0164-00			RES,FXD,FILM:499 OHM,1%,0.125W,TC=T0	19701	5033ED499R0F
A7R56	321-0164-00			RES,FXD,FILM:499 OHM,1%,0.125W,TC=T0	19701	5033ED499R0F
A7R57	325-0053-00			RES,FXD,FILM:50 OHM,1%,0.05W,TC=T0	91637	CMF50-F50R00F
A7R58	325-0053-00			RES,FXD,FILM:50 OHM,1%,0.05W,TC=T0	91637	CMF50-F50R00F
A7R59	325-0053-00			RES,FXD,FILM:50 OHM,1%,0.05W,TC=T0	91637	CMF50-F50R00F
A7R60	325-0053-00			RES,FXD,FILM:50 OHM,1%,0.05W,TC=T0	91637	CMF50-F50R00F
A7R61	325-0053-00			RES,FXD,FILM:50 OHM,1%,0.05W,TC=T0	91637	CMF50-F50R00F
A7R62	325-0053-00			RES,FXD,FILM:50 OHM,1%,0.05W,TC=T0	91637	CMF50-F50R00F
A7R63	321-0143-00			RES,FXD,FILM:301 OHM,1%,0.125W,TC=T0	07716	CEAD301R0F
A7R64	321-0126-00			RES,FXD,FILM:200 OHM,1%,0.125W,TC=T0	19701	5033ED200R0F
A7R65	321-0143-00			RES,FXD,FILM:301 OHM,1%,0.125W,TC=T0	07716	CEAD301R0F
A7R66	321-0126-00			RES,FXD,FILM:200 OHM,1%,0.125W,TC=T0	19701	5033ED200R0F
A7R67	322-0111-00			RES,FXD,FILM:140 OHM,1%,0.25W,TC=T0	91637	MFF1421G140R0F
A7R68	321-0202-00			RES,FXD,FILM:1.24K OHM,1%,0.125W,TC=T0	24546	NA55D1241F
A7R69	321-0170-00			RES,FXD,FILM:576 OHM,1%,0.125W,TC=T0	07716	CEAD576R0F
A7R70	321-0202-00			RES,FXD,FILM:1.24K OHM,1%,0.125W,TC=T0	24546	NA55D1241F
A7R71	321-0202-00			RES,FXD,FILM:1.24K OHM,1%,0.125W,TC=T0	24546	NA55D1241F
A7R72	322-0111-00			RES,FXD,FILM:140 OHM,1%,0.25W,TC=T0	91637	MFF1421G140R0F
A7R73	321-0170-00			RES,FXD,FILM:576 OHM,1%,0.125W,TC=T0	07716	CEAD576R0F
A7R74	321-0202-00			RES,FXD,FILM:1.24K OHM,1%,0.125W,TC=T0	24546	NA55D1241F
A7R75	301-0271-00			RES,FXD,FILM:270 OHM,5%,0.5W	19701	5053CX270R0J
A7R76	301-0271-00			RES,FXD,FILM:270 OHM,5%,0.5W	19701	5053CX270R0J
A7R77	315-0102-00			RES,FXD,FILM:1K OHM,5%,0.25W	57668	NTR25JE01K0
A7R78	315-0103-00			RES,FXD,FILM:10K OHM,5%,0.25W	19701	5043CX10K00J
A7R79	315-0103-00			RES,FXD,FILM:10K OHM,5%,0.25W	19701	5043CX10K00J
A7R80	321-0289-00			RES,FXD,FILM:10.0K OHM,1%,0.125W,TC=T0	19701	5033ED10K0F
A7R81	321-0260-00			RES,FXD,FILM:4.99K OHM,1%,0.125W,TC=T0	19701	5033ED4K990F
A7R82	321-0043-00			RES,FXD,FILM:27.4 OHM,1%,0.125W,TC=T0	91637	CMF55116G27R40F
A7R83	321-0043-00			RES,FXD,FILM:27.4 OHM,1%,0.125W,TC=T0	91637	CMF55116G27R40F
A7R84	315-0430-00			RES,FXD,FILM:43 OHM,5%,0.25W	19701	5043CX43R00J
A7R85	315-0510-00			RES,FXD,FILM:51 OHM,5%,0.25W	19701	5043CX51R00J
A7R86	311-2257-00			RES,VAR,NONWW:TRMR,500 OHM,20%,0.5W	TK1450	GF06VT 500 OHM
A7R87	315-0510-00			RES,FXD,FILM:51 OHM,5%,0.25W	19701	5043CX51R00J
A7R88	315-0151-00			RES,FXD,FILM:150 OHM,5%,0.25W	57668	NTR25J-E150E
A7R89	315-0151-00			RES,FXD,FILM:150 OHM,5%,0.25W	57668	NTR25J-E150E
A7R90	323-0165-00			RES,FXD,FILM:511 OHM,1%,0.5W,TC=T0	24546	NA65D5110F
A7R91	311-2275-00			RES,VAR,NONWW:TRMR,200 OHM,20%,0.5W	TK1450	GF06VT 200 OHM
A7R92	323-0165-00			RES,FXD,FILM:511 OHM,1%,0.5W,TC=T0	24546	NA65D5110F
A7R93	321-0075-00			RES,FXD,FILM:59.0 OHM,1%,0.125W,TC=T0	91637	CMF55116G59R00F
A7R94	323-0193-00			RES,FXD,FILM:1K OHM,1%,0.5W,TC=T0	75042	CECT0-1001F

http://manoman.sqhill.com

Component No.	Tektronix Part No.	Serial/Assembly No. Effective	Dscont	Name & Description	Mfr. Code	Mfr. Part No.
A7R95	321-0075-00			RES,FXD,FILM:59.0 OHM,1%,0.125W,TC=T0	91637	CMF55116G59R00F
A7R96	323-0193-00			RES,FXD,FILM:1K OHM,1%,0.5W,TC=T0	75042	CECT0-1001F
A7R97	315-0510-00			RES,FXD,FILM:51 OHM,5%,0.25W	19701	5043CX51R00J
A7R98	315-0510-00			RES,FXD,FILM:51 OHM,5%,0.25W	19701	5043CX51R00J
A7R99	315-0220-00			RES,FXD,FILM:22 OHM,5%,0.25W	19701	5043CX22R00J
A7R100	315-0103-00			RES,FXD,FILM:10K OHM,5%,0.25W	19701	5043CX10K00J
A7U1	156-0730-02			MICROCKT,DGTL:QUAD 2-INP NOR BFR,SCRN	01295	SN74LS33NP3
A7U2	156-0158-00			MICROCKT,LINEAR:DUAL OPNL AMPL	04713	MC1458P1/MC1458U
A7U4	155-0173-05			MICROCKT,DGTL:CHANNEL SWITCH	80009	155-0173-05
A7U5	155-0173-05			MICROCKT,DGTL:CHANNEL SWITCH	80009	155-0173-05

http://manoman.sqhill.com

Component No.	Tektronix Part No.	Serial/Assembly No. Effective	Dscont	Name & Description	Mfr. Code	Mfr. Part No.
A8	670-4769-20			CIRCUIT BD ASSY:VERTICAL CHANNEL SWITCH	80009	670-4769-20
A8C505	281-0811-00			CAP,FXD,CER DI:10PF,10%,100V	04222	MA101A100KAA
A8C508	281-0775-00			CAP,FXD,CER DI:0.1UF,20%,50V	04222	MA205E104MAA
A8C512	285-0650-00			CAP,FXD,PLASTIC:0.027UF,5%,100V	56289	192P27352M447
A8C515	285-0643-00			CAP,FXD,PLASTIC:0.0047UF,5%,100V	56289	192P47252R468
A8C520	283-0666-00			CAP,FXD,MICA DI:890PF,2%,100V	00853	D151F891G0
A8C525	283-0649-00			CAP,FXD,MICA DI:105PF,1%,300V	00853	D155F1050F0
A8C531	285-0598-00			CAP,FXD,PLASTIC:0.01UF,5%,100V	19396	DU490B103J
A8C538	281-0204-00			CAP,VAR,PLASTIC:2-22PF,100V	80031	2807C00222WJ02
A8C539	281-0775-00			CAP,FXD,CER DI:0.1UF,20%,50V	04222	MA205E104MAA
A8C582	290-0745-00			CAP,FXD,ELCTLT:22UF,+50-10%,25V	54473	ECE-A25V22L
A8C583	290-0745-00			CAP,FXD,ELCTLT:22UF,+50-10%,25V	54473	ECE-A25V22L
A8C584	290-0745-00			CAP,FXD,ELCTLT:22UF,+50-10%,25V	54473	ECE-A25V22L
A8C605	281-0811-00			CAP,FXD,CER DI:10PF,10%,100V	04222	MA101A100KAA
A8C608	281-0775-00			CAP,FXD,CER DI:0.1UF,20%,50V	04222	MA205E104MAA
A8C612	285-0650-00			CAP,FXD,PLASTIC:0.027UF,5%,100V	56289	192P27352M447
A8C615	285-0643-00			CAP,FXD,PLASTIC:0.0047UF,5%,100V	56289	192P47252R468
A8C620	283-0666-00			CAP,FXD,MICA DI:890PF,2%,100V	00853	D151F891G0
A8C625	283-0649-00			CAP,FXD,MICA DI:105PF,1%,300V	00853	D155F1050F0
A8C631	285-0598-00			CAP,FXD,PLASTIC:0.01UF,5%,100V	19396	DU490B103J
A8C638	281-0204-00			CAP,VAR,PLASTIC:2-22PF,100V	80031	2807C00222WJ02
A8C639	281-0775-00			CAP,FXD,CER DI:0.1UF,20%,50V	04222	MA205E104MAA
A8C675	281-0775-00			CAP,FXD,CER DI:0.1UF,20%,50V	04222	MA205E104MAA
A8C681	281-0788-00			CAP,FXD,CER DI:470PF,10%,100V	04222	MA101C471KAA
A8C695	290-0746-00			CAP,FXD,ELCTLT:47UF,+50-10%,16V	54473	ECE-A6V47L
A8CR552	152-0141-02			SEMICOND DVC,DI:SW,SI,30V,150MA,30V,DO-35	03508	DA2527 (1N4152)
A8CR651	152-0141-02			SEMICOND DVC,DI:SW,SI,30V,150MA,30V,DO-35	03508	DA2527 (1N4152)
A8CR654	152-0141-02			SEMICOND DVC,DI:SW,SI,30V,150MA,30V,DO-35	03508	DA2527 (1N4152)
A8J680	131-0608-00			TERMINAL,PIN:0.365 L X 0.025 BRZ GLD PL (QUANTITY OF 7)	22526	48283-036
A8L582	108-0538-00			COIL,RF:FIXED,2.7UH	76493	JWM#B7059
A8L583	108-0538-00			COIL,RF:FIXED,2.7UH	76493	JWM#B7059
A8L584	108-0538-00			COIL,RF:FIXED,2.7UH	76493	JWM#B7059
A8Q542	151-0302-00			TRANSISTOR:NPN,SI,TO-18	04713	ST899
A8Q548	151-0302-00			TRANSISTOR:NPN,SI,TO-18	04713	ST899
A8Q556	151-0302-00			TRANSISTOR:NPN,SI,TO-18	04713	ST899
A8Q558	151-0302-00			TRANSISTOR:NPN,SI,TO-18	04713	ST899
A8Q642	151-0302-00			TRANSISTOR:NPN,SI,TO-18	04713	ST899
A8Q648	151-0302-00			TRANSISTOR:NPN,SI,TO-18	04713	ST899
A8Q652	151-0301-00			TRANSISTOR:PNP,SI,TO-18	04713	ST898
A8Q656	151-0302-00			TRANSISTOR:NPN,SI,TO-18	04713	ST899
A8Q658	151-0302-00			TRANSISTOR:NPN,SI,TO-18	04713	ST899
A8Q672	151-0301-00			TRANSISTOR:PNP,SI,TO-18	04713	ST898
A8Q676	151-0134-00			TRANSISTOR:PNP,SI,TO-39	04713	SM3195
A8Q682	151-0301-00			TRANSISTOR:PNP,SI,TO-18	04713	ST898
A8R501	321-0289-00			RES,FXD,FILM:10.0K OHM,1%,0.125W,TC=T0	19701	5033ED10K0F
A8R502	321-0289-00			RES,FXD,FILM:10.0K OHM,1%,0.125W,TC=T0	19701	5033ED10K0F
A8R504	321-0335-00			RES,FXD,FILM:30.1K OHM,1%,0.125W,TC=T0	57668	RB14FXE30K1
A8R505	321-0335-00			RES,FXD,FILM:30.1K OHM,1%,0.125W,TC=T0	57668	RB14FXE30K1
A8R511	321-0414-00			RES,FXD,FILM:200K OHM,1%,0.125W,TC=T0	07716	CEAD20002F
A8R512	311-1214-00			RES,VAR,NONWW:TRMR,200K OHM,0.5W	32997	3386F-T04-204
A8R513	321-0318-00			RES,FXD,FILM:20.0K OHM,1%,0.125W,TC=T0	19701	5033ED20K00F
A8R514	321-0385-00			RES,FXD,FILM:100K OHM,1%,0.125W,TC=T0	19701	5033ED100K0F
A8R515	311-1235-00			RES,VAR,NONWW:100K OHM,0.5W	32997	3386F-T04-104
A8R516	321-0309-00			RES,FXD,FILM:16.2K OHM,1%,0.125W,TC=T0	19701	5033ED16K20F
A8R519	321-0385-00			RES,FXD,FILM:100K OHM,1%,0.125W,TC=T0	19701	5033ED100K0F
A8R520	311-1232-00			RES,VAR,NONWW:TRMR,50K OHM,0.5W	32997	3386F-T04-503
A8R521	321-0281-00			RES,FXD,FILM:8.25K OHM,1%,0.125W,TC=T0	19701	5043ED8K250F
A8R524	321-0357-00			RES,FXD,FILM:51.1K OHM,1%,0.125W,TC=T0	07716	CEAD51101F

http://manoman.sqhill.com

Component No.	Tektronix Part No.	Serial/Assembly No. Effective	Dscont	Name & Description	Mfr. Code	Mfr. Part No.
A8R525	311-1230-00			RES,VAR,NONWW:TRMR,20K OHM,0.5W	32997	3386F-T04-203
A8R526	321-0314-00			RES,FXD,FILM:18.2K OHM,1%,0.125W,TC=T0	19701	5043ED18K20F
A8R529	321-0326-00			RES,FXD,FILM:24.3K OHM,1%,0.125W,TC=T0	19701	5043ED24K30F
A8R530	311-1230-00			RES,VAR,NONWW:TRMR,20K OHM,0.5W	32997	3386F-T04-203
A8R531	321-0450-00			RES,FXD,FILM:475K OHM,1%,0.125W,TC=T0	19701	5043ED475K0F
A8R532	321-0450-00			RES,FXD,FILM:475K OHM,1%,0.125W,TC=T0	19701	5043ED475K0F
A8R535	311-1235-00			RES,VAR,NONWW:100K OHM,0.5W	32997	3386F-T04-104
A8R536	315-0104-00			RES,FXD,FILM:100K OHM,5%,0.25W	57668	NTR25J-E100K
A8R537	315-0244-00			RES,FXD,FILM:240K OHM,5%,0.25W	19701	5043CX240K0J
A8R538	321-0326-00			RES,FXD,FILM:24.3K OHM,1%,0.125W,TC=T0	19701	5043ED24K30F
A8R542	323-0168-00			RES,FXD,FILM:549 OHM,1%,0.5W,TC=T0	19701	5053RD549R0F
A8R543	321-0065-00			RES,FXD,FILM:46.4 OHM,1%,0.125W,TC=T0	57668	RB14FXE 46E4
A8R547	321-0084-00			RES,FXD,FILM:73.2 OHM,1%,0.125W,TC=T0	91637	CMF55116G73R20F
A8R548	323-0168-00			RES,FXD,FILM:549 OHM,1%,0.5W,TC=T0	19701	5053RD549R0F
A8R549	321-0010-00			RES,FXD,FILM:12.4 OHM,1%,0.125W,TC=T0	57668	RB14FXE 12E4
A8R550	323-0136-00			RES,FXD,FILM:255 OHM,1%,0.5W,TC=T0	24546	NA65D2550F
A8R552	315-0512-00			RES,FXD,FILM:5.1K OHM,5%,0.25W	57668	NTR25J-E05K1
A8R555	315-0102-00			RES,FXD,FILM:1K OHM,5%,0.25W	57668	NTR25JE01K0
A8R556	321-0126-00			RES,FXD,FILM:200 OHM,1%,0.125W,TC=T0	19701	5033ED200R0F
A8R557	321-0237-00			RES,FXD,FILM:2.87K OHM,1%,0.125W,TC=T0	07716	CEAD 28700F
A8R558	321-0126-00			RES,FXD,FILM:200 OHM,1%,0.125W,TC=T0	19701	5033ED200R0F
A8R559	317-0103-00			RES,FXD,CMPSN:10K OHM,5%,0125W	01121	BB1035
A8R601	321-0289-00			RES,FXD,FILM:10.0K OHM,1%,0.125W,TC=T0	19701	5033ED10K0F
A8R602	321-0289-00			RES,FXD,FILM:10.0K OHM,1%,0.125W,TC=T0	19701	5033ED10K0F
A8R604	321-0335-00			RES,FXD,FILM:30.1K OHM,1%,0.125W,TC=T0	57668	RB14FXE30K1
A8R605	321-0335-00			RES,FXD,FILM:30.1K OHM,1%,0.125W,TC=T0	57668	RB14FXE30K1
A8R611	321-0414-00			RES,FXD,FILM:200K OHM,1%,0.125W,TC=T0	07716	CEAD20002F
A8R612	311-1214-00			RES,VAR,NONWW:TRMR,200K OHM,0.5W	32997	3386F-T04-204
A8R613	321-0318-00			RES,FXD,FILM:20.0K OHM,1%,0.125W,TC=T0	19701	5033ED20K00F
A8R614	321-0385-00			RES,FXD,FILM:100K OHM,1%,0.125W,TC=T0	19701	5033ED100K0F
A8R615	311-1235-00			RES,VAR,NONWW:100K OHM,0.5W	32997	3386F-T04-104
A8R616	321-0309-00			RES,FXD,FILM:16.2K OHM,1%,0.125W,TC=T0	19701	5033ED16K20F
A8R619	321-0385-00			RES,FXD,FILM:100K OHM,1%,0.125W,TC=T0	19701	5033ED100K0F
A8R620	311-1232-00			RES,VAR,NONWW:TRMR,50K OHM,0.5W	32997	3386F-T04-503
A8R621	321-0281-00			RES,FXD,FILM:8.25K OHM,1%,0.125W,TC=T0	19701	5043ED8K250F
A8R624	321-0357-00			RES,FXD,FILM:51.1K OHM,1%,0.125W,TC=T0	07716	CEAD51101F
A8R625	311-1230-00			RES,VAR,NONWW:TRMR,20K OHM,0.5W	32997	3386F-T04-203
A8R626	321-0314-00			RES,FXD,FILM:18.2K OHM,1%,0.125W,TC=T0	19701	5043ED18K20F
A8R629	321-0326-00			RES,FXD,FILM:24.3K OHM,1%,0.125W,TC=T0	19701	5043ED24K30F
A8R630	311-1230-00			RES,VAR,NONWW:TRMR,20K OHM,0.5W	32997	3386F-T04-203
A8R631	321-0450-00			RES,FXD,FILM:475K OHM,1%,0.125W,TC=T0	19701	5043ED475K0F
A8R632	321-0450-00			RES,FXD,FILM:475K OHM,1%,0.125W,TC=T0	19701	5043ED475K0F
A8R638	321-0326-00			RES,FXD,FILM:24.3K OHM,1%,0.125W,TC=T0	19701	5043ED24K30F
A8R642	323-0168-00			RES,FXD,FILM:549 OHM,1%,0.5W,TC=T0	19701	5053RD549R0F
A8R643	321-0065-00			RES,FXD,FILM:46.4 OHM,1%,0.125W,TC=T0	57668	RB14FXE 46E4
A8R646	321-0080-00			RES,FXD,FILM:66.5 OHM,1%,0.125W,TC=T0	91637	CMF55116G66R50F
A8R647	321-0084-00			RES,FXD,FILM:73.2 OHM,1%,0.125W,TC=T0	91637	CMF55116G73R20F
A8R648	323-0168-00			RES,FXD,FILM:549 OHM,1%,0.5W,TC=T0	19701	5053RD549R0F
A8R649	321-0010-00			RES,FXD,FILM:12.4 OHM,1%,0.125W,TC=T0	57668	RB14FXE 12E4
A8R650	323-0136-00			RES,FXD,FILM:255 OHM,1%,0.5W,TC=T0	24546	NA65D2550F
A8R651	315-0471-00			RES,FXD,FILM:470 OHM,5%,0.25W	57668	NTR25J-E470E
A8R652	315-0153-00			RES,FXD,FILM:15K OHM,5%,0.25W	19701	5043CX15K00J
A8R653	315-0472-00			RES,FXD,FILM:4.7K OHM,5%,0.25W	57668	NTR25J-E04K7
A8R654	315-0512-00			RES,FXD,FILM:5.1K OHM,5%,0.25W	57668	NTR25J-E05K1
A8R655	315-0102-00			RES,FXD,FILM:1K OHM,5%,0.25W	57668	NTR25JE01K0
A8R656	321-0126-00			RES,FXD,FILM:200 OHM,1%,0.125W,TC=T0	19701	5033ED200R0F
A8R657	321-0237-00			RES,FXD,FILM:2.87K OHM,1%,0.125W,TC=T0	07716	CEAD 28700F
A8R658	321-0126-00			RES,FXD,FILM:200 OHM,1%,0.125W,TC=T0	19701	5033ED200R0F
A8R659	317-0103-00			RES,FXD,CMPSN:10K OHM,5%,0125W	01121	BB1035

http://manoman.sqhill.com

Component No.	Tektronix Part No.	Serial/Assembly No. Effective	Dscont	Name & Description	Mfr. Code	Mfr. Part No.
A8R671	321-0246-00			RES,FXD,FILM:3.57K OHM,1%,0.125W,TC=T0	19701	5043ED3K570F
A8R672	321-0309-00			RES,FXD,FILM:16.2K OHM,1%,0.125W,TC=T0	19701	5033ED16K20F
A8R675	315-0272-00			RES,FXD,FILM:2.7K OHM,5%,0.25W	57668	NTR25J-E02K7
A8R680	321-0277-03			RES,FXD,FILM:7.50K OHM,0.25%,0.125W,T=T2	01121	ORDER BY DESCR
A8R681	321-0277-03			RES,FXD,FILM:7.50K OHM,0.25%,0.125W,T=T2	01121	ORDER BY DESCR
A8R682	315-0471-00			RES,FXD,FILM:470 OHM,5%,0.25W	57668	NTR25J-E470E
A8R683	315-0102-00			RES,FXD,FILM:1K OHM,5%,0.25W	57668	NTR25JE01K0
A8R684	307-0053-00			RES,FXD,CMPSN:3.3 OHM,5%,0.5W	01121	EB33G5
A8R690	321-0279-00			RES,FXD,FILM:7.87K OHM,1%,0.125W,TC=T0	07716	CEAD78700F
A8R691	321-0322-00			RES,FXD,FILM:22.1K OHM,0.1%,0.125W,TC=T0	19701	5033ED22K10F
A8R694	315-0562-00			RES,FXD,FILM:5.6K OHM,5%,0.25W	57668	NTR25J-E05K6
A8TP500	214-0579-00			TERM,TEST POINT:BRS CD PL	80009	214-0579-00
A8TP508	214-0579-00			TERM,TEST POINT:BRS CD PL	80009	214-0579-00
A8TP538	214-0579-00			TERM,TEST POINT:BRS CD PL	80009	214-0579-00
A8TP552	214-0579-00			TERM,TEST POINT:BRS CD PL	80009	214-0579-00
A8TP555	214-0579-00			TERM,TEST POINT:BRS CD PL	80009	214-0579-00
A8TP582	214-0579-00			TERM,TEST POINT:BRS CD PL	80009	214-0579-00
A8TP583	214-0579-00			TERM,TEST POINT:BRS CD PL	80009	214-0579-00
A8TP584	214-0579-00			TERM,TEST POINT:BRS CD PL	80009	214-0579-00
A8TP600	214-0579-00			TERM,TEST POINT:BRS CD PL	80009	214-0579-00
A8TP608	214-0579-00			TERM,TEST POINT:BRS CD PL	80009	214-0579-00
A8TP648	214-0579-00			TERM,TEST POINT:BRS CD PL	80009	214-0579-00
A8TP657	214-0579-00			TERM,TEST POINT:BRS CD PL	80009	214-0579-00
A8TP682	214-0579-00			TERM,TEST POINT:BRS CD PL	80009	214-0579-00
A8TP684	214-0579-00			TERM,TEST POINT:BRS CD PL	80009	214-0579-00
A8TP694	214-0579-00			TERM,TEST POINT:BRS CD PL	80009	214-0579-00
A8U508	156-1149-00			MICROCKT,LINEAR:OPERATIONAL AMP,JFET INPUT	27014	LF351N/GLEA134
A8U538	156-1149-00			MICROCKT,LINEAR:OPERATIONAL AMP,JFET INPUT	27014	LF351N/GLEA134
A8U608	156-1149-00			MICROCKT,LINEAR:OPERATIONAL AMP,JFET INPUT	27014	LF351N/GLEA134
A8U638	156-1149-00			MICROCKT,LINEAR:OPERATIONAL AMP,JFET INPUT	27014	LF351N/GLEA134
A8U668	155-0173-05			MICROCKT,DGTL:CHANNEL SWITCH	80009	155-0173-05
A8U682	156-0067-00			MICROCKT,LINEAR:OPNL AMPL,SEL	04713	MC1741CP1
A8U694	156-0067-00			MICROCKT,LINEAR:OPNL AMPL,SEL	04713	MC1741CP1

http://manoman.sqhill.com

Component No.	Tektronix Part No.	Serial/Assembly No. Effective	Dscont	Name & Description	Mfr. Code	Mfr. Part No.
A9	670-3959-01			CIRCUIT BD ASSY:X-Y COMP (OPTION 02 ONLY)	80009	670-3959-01
A9C822	283-0603-00			CAP,FXD,MICA DI:113PF,2%,300V	00853	D155F1130G0
A9C825	283-0668-00			CAP,FXD,MICA DI:184PF,1%,100V	00853	D155F1840F0
A9C827	283-0677-00			CAP,FXD,MICA DI:82PF,1%,500V	00853	D155E820F0
A9C832	281-0118-00			CAP,VAR,MICA DI:8-90PF,175V	52769	GSM231
A9C835	283-0668-00			CAP,FXD,MICA DI:184PF,1%,100V	00853	D155F1840F0
A9C837	283-0677-00			CAP,FXD,MICA DI:82PF,1%,500V	00853	D155E820F0
A9CR820	152-0141-02			SEMICOND DVC,DI:SM,SI,30V,150MA,30V,DO-35	03508	DA2527 (1N4152)
A9K822	148-0034-00			RELAY,ARMATURE:DPDT,15VDC,600 OHM	80009	148-0034-00
A9K838	148-0034-00			RELAY,ARMATURE:DPDT,15VDC,600 OHM	80009	148-0034-00
A9L822	108-0719-00			COIL,RF:FIXED,805NH	80009	108-0719-00
A9L825	108-0719-00			COIL,RF:FIXED,805NH	80009	108-0719-00
A9L827	108-0718-00			COIL,RF:FIXED,1.75UH	80009	108-0718-00
A9L832	108-0719-00			COIL,RF:FIXED,805NH	80009	108-0719-00
A9L835	108-0719-00			COIL,RF:FIXED,805NH	80009	108-0719-00
A9L837	108-0718-00			COIL,RF:FIXED,1.75UH	80009	108-0718-00
A9R822	321-0068-00			RES,FXD,FILM:49.9 OHM,0.5%,0.125W,TC=T0	91637	CMF55116G49R90F
A9R832	321-0068-00			RES,FXD,FILM:49.9 OHM,0.5%,0.125W,TC=T0	91637	CMF55116G49R90F

http://manoman.sqhill.com

Component No.	Tektronix Part No.	Serial/Assembly No. Effective	Dscont	Name & Description	Mfr. Code	Mfr. Part No.
A10	670-3960-00			CIRCUIT BD ASSY:HORIZONTAL INTERCONNECT	80009	670-3960-00

http://manoman.sqhill.com

Component No.	Tektronix Part No.	Serial/Assembly No. Effective	Dscont	Name & Description	Mfr. Code	Mfr. Part No.
A11	670-3958-01			CIRCUIT BD ASSY:HORIZONTAL INTERFACE	80009	670-3958-01
A11C853	281-0508-00			CAP,FXD,CER DI:12PF,+/-0.6PF,500V	52763	2RDPLZ007 12P0JC
A11C863	281-0508-00			CAP,FXD,CER DI:12PF,+/-0.6PF,500V	52763	2RDPLZ007 12P0JC
A11R841	321-1068-07			RES,FXD,FILM:50.5 OHM,0.1%,0.125W,TC=T9	57668	RB14 BZE 50E5
A11R842	321-1068-07			RES,FXD,FILM:50.5 OHM,0.1%,0.125W,TC=T9	57668	RB14 BZE 50E5
A11R843	321-1068-07			RES,FXD,FILM:50.5 OHM,0.1%,0.125W,TC=T9	57668	RB14 BZE 50E5
A11R844	321-1068-07			RES,FXD,FILM:50.5 OHM,0.1%,0.125W,TC=T9	57668	RB14 BZE 50E5
A11R851	323-0187-00			RES,FXD,FILM:866 OHM,1%,0.5W,TC=T0	19701	5053RD866R0F
A11R852	321-0074-00			RES,FXD,FILM:57.6 OHM,1%,0.125W,TC=T0	91637	CMF55116G57R60F
A11R853	321-0074-00			RES,FXD,FILM:57.6 OHM,1%,0.125W,TC=T0	91637	CMF55116G57R60F
A11R861	323-0187-00			RES,FXD,FILM:866 OHM,1%,0.5W,TC=T0	19701	5053RD866R0F
A11R862	321-0074-00			RES,FXD,FILM:57.6 OHM,1%,0.125W,TC=T0	91637	CMF55116G57R60F
A11R863	321-0074-00			RES,FXD,FILM:57.6 OHM,1%,0.125W,TC=T0	91637	CMF55116G57R60F
A11R868	315-0512-00			RES,FXD,FILM:5.1K OHM,5%,0.25W	57668	NTR25J-E05K1
A11R869	315-0122-00			RES,FXD,FILM:1.2K OHM,5%,0.25W	57668	NTR25J-E01K2
A11R870	321-0218-00			RES,FXD,FILM:1.82K OHM,1%,0.125W,TC=T0	19701	5033ED1K82F
A11S865	260-0984-00			SWITCH,SLIDE:DPTT,0.5A,125V	79727	G-128-S-0012
A11U884	155-0022-00			MICROCKT,DGTL:CHANNEL SWITCH	80009	155-0022-00

http://manoman.sqhill.com

Component No.	Tektronix Part No.	Serial/Assembly No. Effective	Dscont	Name & Description	Mfr. Code	Mfr. Part No.
A12	614-0699-00			SIGNAL OUT ASSY:	80009	614-0699-00

http://manoman.sqhill.com

Component No.	Tektronix Part No.	Serial/Assembly No. Effective	Dscont	Name & Description	Mfr. Code	Mfr. Part No.
A12A1	---- -----			CIRCUIT BD ASSY:SIGNALS OUT (NOT AVAILABLE,ORDER A12)		
A12A1C13	281-0775-00			CAP,FXD,CER DI:0.1UF,20%,50V	04222	MA205E104MAA
A12A1C17	281-0759-00			CAP,FXD,CER DI:22PF,10%,100V	04222	MA101A220KAA
A12A1C79	281-0936-00			CAP,FXD,CER DI:39PF,5%,100V	04222	MA101A390JAA
A12A1C91	290-0745-00			CAP,FXD,ELCTLT:22UF,+50-10%,25V	54473	ECE-A25V22L
A12A1C95	290-0745-00			CAP,FXD,ELCTLT:22UF,+50-10%,25V	54473	ECE-A25V22L
A12A1CR12	152-0141-02			SEMICOND DVC,DI:SW,SI,30V,150MA,30V,DO-35	03508	DA2527 (1N4152)
A12A1CR19	152-0141-02			SEMICOND DVC,DI:SW,SI,30V,150MA,30V,DO-35	03508	DA2527 (1N4152)
A12A1CR76	152-0141-02			SEMICOND DVC,DI:SW,SI,30V,150MA,30V,DO-35	03508	DA2527 (1N4152)
A12A1CR77	152-0141-02			SEMICOND DVC,DI:SW,SI,30V,150MA,30V,DO-35	03508	DA2527 (1N4152)
A12A1CR78	152-0141-02			SEMICOND DVC,DI:SW,SI,30V,150MA,30V,DO-35	03508	DA2527 (1N4152)
A12A1Q10	151-0223-03			TRANSISTOR:NPN,SI	80009	151-0223-03
A12A1Q11	151-0223-03			TRANSISTOR:NPN,SI	80009	151-0223-03
A12A1Q17	151-0220-05			TRANSISTOR:SCREENED	80009	151-0220-05
A12A1Q49	151-0223-03			TRANSISTOR:NPN,SI	80009	151-0223-03
A12A1Q62	151-0223-03			TRANSISTOR:NPN,SI	80009	151-0223-03
A12A1Q77	151-0220-05			TRANSISTOR:SCREENED	80009	151-0220-05
A12A1R3	315-0470-00			RES,FXD,FILM:47 OHM,5%,0.25W	57668	NTR25J-E47E0
A12A1R9	315-0101-00			RES,FXD,FILM:100 OHM,5%,0.25W	57668	NTR25J-E 100E
A12A1R11	315-0222-00			RES,FXD,FILM:2.2K OHM,5%,0.25W	57668	NTR25J-E02K2
A12A1R12	315-0241-00			RES,FXD,FILM:240 OHM,5%,0.25W	19701	5043CX240R0J
A12A1R13	315-0101-00			RES,FXD,FILM:100 OHM,5%,0.25W	57668	NTR25J-E 100E
A12A1R16	321-0262-00			RES,FXD,FILM:5.23K OHM,1,0.125W,TC=T0	19701	5033ED5K230F
A12A1R17	315-0152-00			RES,FXD,FILM:1.5K OHM,5%,0.25W	57668	NTR25J-E01K5
A12A1R18	315-0272-00			RES,FXD,FILM:2.7K OHM,5%,0.25W	57668	NTR25J-E02K7
A12A1R19	321-0190-00			RES,FXD,FILM:931 OHM,1%,0.125W,TC=T2	19701	5043ED931R0F
A12A1R45	315-0201-00			RES,FXD,FILM:200 OHM,5%,0.25W	57668	NTR25J-E200E
A12A1R46	315-0752-00			RES,FXD,FILM:7.5K OHM,5%,0.25W	57668	NTR25J-E07K5
A12A1R47	315-0101-00			RES,FXD,FILM:100 OHM,5%,0.25W	57668	NTR25J-E 100E
A12A1R49	321-0143-00			RES,FXD,FILM:301 OHM,1%,0.125W,TC=T0	07716	CEAD301R0F
A12A1R56	315-0181-00			RES,FXD,FILM:180 OHM,5%,0.25W	57668	NTR25J-E180E
A12A1R57	315-0123-00			RES,FXD,FILM:12K OHM,5%,0.25W	57668	NTR25J-E12K0
A12A1R59	315-0101-00			RES,FXD,FILM:100 OHM,5%,0.25W	57668	NTR25J-E 100E
A12A1R61	315-0560-00			RES,FXD,FILM:56 OHM,5%,0.25W	57668	NTR25J-E56E0
A12A1R62	323-0193-00			RES,FXD,FILM:1K OHM,1%,0.5W,TC=T0	75042	CECT0-1001F
A12A1R67	315-0181-00			RES,FXD,FILM:180 OHM,5%,0.25W	57668	NTR25J-E180E
A12A1R68	315-0123-00			RES,FXD,FILM:12K OHM,5%,0.25W	57668	NTR25J-E12K0
A12A1R76	321-0180-00			RES,FXD,FILM:732 OHM,1%,0.125W,TC=T0	07716	CEAD732R0F
A12A1R77	321-0226-00			RES,FXD,FILM:2.21K OHM,1%,0.125W,TC=T0	07716	CEAD22100F
A12A1R78	322-0189-00			RES,FXD,FILM:909 OHM,1%,0.25W,TC=T0	75042	CEBT0-9090F
A12A1R79	315-0390-00			RES,FXD,FILM:39 OHM,5%,0.25W	57668	NTR25J-E39E0

http://manoman.sqhill.com

Component No.	Tektronix Part No.	Serial/Assembly No. Effective	Dscont	Name & Description	Mfr. Code	Mfr. Part No.
A13	670-8622-03			CIRCUIT BD ASSY:READOUT	80009	670-8622-03
A13C3415	290-0804-00			CAP,FXD,ELCTLT:10UF,+50-10%,25V	55680	ULA1E100TEA
A13C3417	290-0920-00			CAP,FXD,ELCTLT:33UF,+50-10%,35V	55680	ULB1V330TEAANA
A13C3418	290-0804-00			CAP,FXD,ELCTLT:10UF,+50-10%,25V	55680	ULA1E100TEA
A13C3420	281-0862-00			CAP,FXD,CER DI:0.001UF,+80-20%,100V	04222	MA101C10ZMAA
A13C3421	281-0773-00			CAP,FXD,CER DI:0.01UF,10%,100V	04222	MA201C103KAA
A13C3427	281-0773-00			CAP,FXD,CER DI:0.01UF,10%,100V	04222	MA201C103KAA
A13C3435	285-0698-00			CAP,FXD,PLASTIC:0.0082UF,5%,100V	19396	DU490/74-28217
A13C3440	281-0816-00			CAP,FXD,CER DI:82 PF,5%,100V	04222	MA106A820JAA
A13C3441	281-0767-00			CAP,FXD,CER DI:330PF,20%,100V	04222	MA106C331MAA
A13C3444	281-0810-00			CAP,FXD,CER DI:5.6PF,+/-0.5PF,100V	04222	MA101A5R6DAA
A13C3454	283-0728-00			CAP,FXD,MICA DI:120PF,1%,500V (NOMINAL VALUE)	00853	D155F121F0
A13C3454	283-0644-00			CAP,FXD,MICA DI:150PF,1%,500V (TEST SELECTED)	00853	D155F151F0
A13C3455	281-0158-00			CAP,VAR,CER DI:7-45PF,25V	59660	518-006 G 7-45
A13C3457	281-0773-00			CAP,FXD,CER DI:0.01UF,10%,100V	04222	MA201C103KAA
A13C3461	281-0765-00			CAP,FXD,CER DI:100PF,5%,100V	04222	MA101A101JAA
A13C3483	281-0788-00			CAP,FXD,CER DI:470PF,10%,100V	04222	MA101C471KAA
A13C3485	281-0774-00			CAP,FXD,CER DI:0.022MFD,20%,100V	04222	MA201E223MAA
A13C3486	281-0773-00			CAP,FXD,CER DI:0.01UF,10%,100V	04222	MA201C103KAA
A13C3501	283-0114-00			CAP,FXD,CER DI:1500PF,5%,200V	59660	805-534-Y5D0152J
A13C3502	281-0773-00			CAP,FXD,CER DI:0.01UF,10%,100V	04222	MA201C103KAA
A13C3503	281-0773-00			CAP,FXD,CER DI:0.01UF,10%,100V	04222	MA201C103KAA
A13C3504	281-0773-00			CAP,FXD,CER DI:0.01UF,10%,100V	04222	MA201C103KAA
A13C3511	281-0762-00			CAP,FXD,CER DI:27PF,20%,100V	04222	MA101A270MAA
A13C3512	283-0666-00			CAP,FXD,MICA DI:890PF,2%,100V	00853	D151F891G0
A13C3513	283-0640-00			CAP,FXD,MICA DI:160PF,1%,100V	00853	D155F161F0
A13C3521	281-0788-00			CAP,FXD,CER DI:470PF,10%,100V	04222	MA101C471KAA
A13C3539	281-0788-00			CAP,FXD,CER DI:470PF,10%,100V	04222	MA101C471KAA
A13C3544	281-0774-00			CAP,FXD,CER DI:0.022MFD,20%,100V	04222	MA201E223MAA
A13C3546	281-0773-00			CAP,FXD,CER DI:0.01UF,10%,100V	04222	MA201C103KAA
A13C3551	281-0773-00			CAP,FXD,CER DI:0.01UF,10%,100V	04222	MA201C103KAA
A13C3559	281-0759-00			CAP,FXD,CER DI:22PF,10%,100V	04222	MA101A220KAA
A13C3559	281-0762-00			CAP,FXD,CER DI:27PF,20%,100V	04222	MA101A270MAA
A13C3559	281-0763-00			CAP,FXD,CER DI:47PF,10%,100V	04222	MA101A470KAA
A13C3559	281-0797-00			CAP,FXD,CER DI:15PF,10%,100V	04222	MA106A150KAA
A13C3559	281-0798-00			CAP,FXD,CER DI:51PF,1%,100V	04222	MA101A510GAA
A13C3559	281-0799-00			CAP,FXD,CER DI:62PF,2%,100V	04222	MA101A620GAA
A13C3559	281-0808-00			CAP,FXD,CER DI:7 PF,20%,100V	04222	MA101A7R04AA
A13C3559	281-0811-00			CAP,FXD,CER DI:10PF,10%,100V	04222	MA101A100KAA
A13C3559	281-0819-00			CAP,FXD,CER DI:33 PF,5%,50V (A13C3559,TEST SELECTED)	04222	GC105A330J
A13C3563	281-0773-00			CAP,FXD,CER DI:0.01UF,10%,100V	04222	MA201C103KAA
A13C3564	281-0773-00			CAP,FXD,CER DI:0.01UF,10%,100V	04222	MA201C103KAA
A13C3576	281-0762-00			CAP,FXD,CER DI:27PF,20%,100V	04222	MA101A270MAA
A13C3577	283-0666-00			CAP,FXD,MICA DI:890PF,2%,100V	00853	D151F891G0
A13C3579	283-0640-00			CAP,FXD,MICA DI:160PF,1%,100V	00853	D155F161F0
A13C3597	281-0759-00			CAP,FXD,CER DI:22PF,10%,100V	04222	MA101A220KAA
A13C3597	281-0762-00			CAP,FXD,CER DI:27PF,20%,100V	04222	MA101A270MAA
A13C3597	281-0763-00			CAP,FXD,CER DI:47PF,10%,100V	04222	MA101A470KAA
A13C3597	281-0797-00			CAP,FXD,CER DI:15PF,10%,100V	04222	MA106A150KAA
A13C3597	281-0798-00			CAP,FXD,CER DI:51PF,1%,100V	04222	MA101A510GAA
A13C3597	281-0799-00			CAP,FXD,CER DI:62PF,2%,100V	04222	MA101A620GAA
A13C3597	281-0808-00			CAP,FXD,CER DI:7 PF,20%,100V	04222	MA101A7R04AA
A13C3597	281-0811-00			CAP,FXD,CER DI:10PF,10%,100V	04222	MA101A100KAA
A13C3597	281-0819-00			CAP,FXD,CER DI:33 PF,5%,50V (A13C3597,TEST SELECTED)	04222	GC105A330J
A13CR2529	152-0141-02			SEMICOND DVC,DI:SW,SI,30V,150MA,30V,DO-35	03508	DA2527 (1N4152)
A13CR3424	152-0141-02			SEMICOND DVC,DI:SW,SI,30V,150MA,30V,DO-35	03508	DA2527 (1N4152)
A13CR3425	152-0141-02			SEMICOND DVC,DI:SW,SI,30V,150MA,30V,DO-35	03508	DA2527 (1N4152)

http://manoman.sqhill.com

Component No.	Tektronix Part No.	Serial/Assembly No. Effective	Dscont	Name & Description	Mfr. Code	Mfr. Part No.
A13CR3437	152-0141-02			SEMICOND DVC,DI:SW,SI,30V,150MA,30V,DO-35	03508	DA2527 (1N4152)
A13CR3439	152-0141-02			SEMICOND DVC,DI:SW,SI,30V,150MA,30V,DO-35	03508	DA2527 (1N4152)
A13CR3445	152-0141-02			SEMICOND DVC,DI:SW,SI,30V,150MA,30V,DO-35	03508	DA2527 (1N4152)
A13CR3446	152-0141-02			SEMICOND DVC,DI:SW,SI,30V,150MA,30V,DO-35	03508	DA2527 (1N4152)
A13CR3453	152-0141-02			SEMICOND DVC,DI:SW,SI,30V,150MA,30V,DO-35	03508	DA2527 (1N4152)
A13CR3457	152-0141-02			SEMICOND DVC,DI:SW,SI,30V,150MA,30V,DO-35	03508	DA2527 (1N4152)
A13CR3461	152-0141-02			SEMICOND DVC,DI:SW,SI,30V,150MA,30V,DO-35	03508	DA2527 (1N4152)
A13CR3462	152-0141-02			SEMICOND DVC,DI:SW,SI,30V,150MA,30V,DO-35	03508	DA2527 (1N4152)
A13CR3487	152-0141-02			SEMICOND DVC,DI:SW,SI,30V,150MA,30V,DO-35	03508	DA2527 (1N4152)
A13CR3550	152-0141-02			SEMICOND DVC,DI:SW,SI,30V,150MA,30V,DO-35	03508	DA2527 (1N4152)
A13CR3570	152-0141-02			SEMICOND DVC,DI:SW,SI,30V,150MA,30V,DO-35	03508	DA2527 (1N4152)
A13CR3571	152-0141-02			SEMICOND DVC,DI:SW,SI,30V,150MA,30V,DO-35	03508	DA2527 (1N4152)
A13L3512	108-0800-00			COIL,RF:FIXED,820MH	04072	9230-90
A13L3577	108-0800-00			COIL,RF:FIXED,820MH	04072	9230-90
A13P3484	131-0993-00			BUS,CONDUCTOR:SHUNT ASSEMBLY,BLACK	22526	65474-005
A13Q3431	151-0190-00			TRANSISTOR:NPN,SI,TO-92	80009	151-0190-00
A13Q3432	151-0190-00			TRANSISTOR:NPN,SI,TO-92	80009	151-0190-00
A13Q3438	151-0188-00			TRANSISTOR:PNP,SI,TO-92	80009	151-0188-00
A13Q3442	151-0190-00			TRANSISTOR:NPN,SI,TO-92	80009	151-0190-00
A13Q3451	151-0190-00			TRANSISTOR:NPN,SI,TO-92	80009	151-0190-00
A13Q3452	151-0190-00			TRANSISTOR:NPN,SI,TO-92	80009	151-0190-00
A13Q3453	151-0190-00			TRANSISTOR:NPN,SI,TO-92	80009	151-0190-00
A13Q3481	151-0188-00			TRANSISTOR:PNP,SI,TO-92	80009	151-0188-00
A13Q3489	151-0190-00			TRANSISTOR:NPN,SI,TO-92	80009	151-0190-00
A13Q3523	151-0232-00			TRANSISTOR:NPN,SI,TO-78	07263	SP12141
A13Q3526	151-0190-00			TRANSISTOR:NPN,SI,TO-92	80009	151-0190-00
A13Q3527	151-0190-00			TRANSISTOR:NPN,SI,TO-92	80009	151-0190-00
A13Q3529	151-0188-00			TRANSISTOR:PNP,SI,TO-92	80009	151-0188-00
A13Q3543	151-0190-00			TRANSISTOR:NPN,SI,TO-92	80009	151-0190-00
A13Q3550	151-0188-00			TRANSISTOR:PNP,SI,TO-92	80009	151-0188-00
A13Q3555	151-1021-00			TRANSISTOR:FET,N-CHAN,SI,TO-18	80009	151-1021-00
A13Q3596	151-1021-00			TRANSISTOR:FET,N-CHAN,SI,TO-18	80009	151-1021-00
A13R3401	315-0512-00			RES,FXD,FILM:5.1K OHM,5%,0.25W	57668	NTR25J-E05K1
A13R3422	315-0432-00			RES,FXD,FILM:4.3K OHM,5%,0.25W	57668	NTR25J-E04K3
A13R3423	315-0683-00			RES,FXD,FILM:68K OHM,5%,0.25W	57668	NTR25J-E68K0
A13R3427	315-0102-00			RES,FXD,FILM:1K OHM,5%,0.25W	57668	NTR25JE01K0
A13R3431	315-0472-00			RES,FXD,FILM:4.7K OHM,5%,0.25W	57668	NTR25J-E04K7
A13R3432	315-0222-00			RES,FXD,FILM:2.2K OHM,5%,0.25W	57668	NTR25J-E02K2
A13R3434	315-0302-00			RES,FXD,FILM:3K OHM,5%,0.25W	57668	NTR25J-E03K0
A13R3435	315-0393-00			RES,FXD,FILM:39K OHM,5%,0.25W	57668	NTR25J-E39K0
A13R3437	315-0752-00			RES,FXD,FILM:7.5K OHM,5%,0.25W	57668	NTR25J-E07K5
A13R3439	315-0242-00			RES,FXD,FILM:2.4K OHM,5%,0.25W	57668	NTR25J-E02K4
A13R3440	315-0103-00			RES,FXD,FILM:10K OHM,5%,0.25W	19701	5043CX10K00J
A13R3441	315-0102-00			RES,FXD,FILM:1K OHM,5%,0.25W	57668	NTR25JE01K0
A13R3442	315-0472-00			RES,FXD,FILM:4.7K OHM,5%,0.25W	57668	NTR25J-E04K7
A13R3444	315-0104-00			RES,FXD,FILM:100K OHM,5%,0.25W	57668	NTR25J-E100K
A13R3446	315-0152-00			RES,FXD,FILM:1.5K OHM,5%,0.25W	57668	NTR25J-E01K5
A13R3450	315-0183-00			RES,FXD,FILM:18K OHM,5%,0.25W	19701	5043CX18K00J
A13R3451	315-0362-00			RES,FXD,FILM:3.6K OHM,5%,0.25W	19701	5043CX3K600J
A13R3452	315-0622-00			RES,FXD,FILM:6.2K OHM,5%,0.25W	19701	5043CX6K200J
A13R3453	315-0301-00			RES,FXD,FILM:300 OHM,5%,0.25W	57668	NTR25J-E300E
A13R3454	321-0350-00			RES,FXD,FILM:43.2K OHM,1%,0.125W,TC=T0	19701	5043ED43K20F
A13R3455	321-0350-00			RES,FXD,FILM:43.2K OHM,1%,0.125W,TC=T0	19701	5043ED43K20F
A13R3457	315-0620-00			RES,FXD,FILM:62 OHM,5%,0.25W	19701	5043CX63R00J
A13R3481	321-0386-00			RES,FXD,FILM:102K OHM,1%,0.125W,TC=T0	07716	CEAD10202F
A13R3482	321-0361-00			RES,FXD,FILM:56.2K OHM,1%,0.125W,TC=T0	07716	CEAD56201F
A13R3483	311-2230-00			RES,VAR,NONWW:TRMR,500 OHM,20%,0.50 LINEAR	TK1450	GF06UT 500
A13R3484	321-0262-00			RES,FXD,FILM:5.23K OHM,1,0.125W,TC=T0	19701	5033ED5K230F
A13R3485	307-0445-00			RES NTWK,FXD,FI:4.7K OHM,20%,(9)RES	32997	4310R-101-472

http://manoman.sqhill.com

Component No.	Tektronix Part No.	Serial/Assembly No. Effective	Dscont	Name & Description	Mfr. Code	Mfr. Part No.
A13R3486	315-0241-00			RES,FXD,FILM:240 OHM,5%,0.25W	19701	5043CX240R0J
A13R3487	315-0102-00			RES,FXD,FILM:1K OHM,5%,0.25W	57668	NTR25JE01K0
A13R3488	315-0203-00			RES,FXD,FILM:20K OHM,5%,0.25W	57668	NTR25J-E 20K
A13R3489	315-0472-00			RES,FXD,FILM:4.7K OHM,5%,0.25W	57668	NTR25J-E04K7
A13R3501	315-0471-00			RES,FXD,FILM:470 OHM,5%,0.25W	57668	NTR25J-E470E
A13R3502	315-0182-00			RES,FXD,FILM:1.8K OHM,5%,0.25W	57668	NTR25J-E1K8
A13R3503	315-0511-00			RES,FXD,FILM:510 OHM,5%,0.25W	19701	5043CX510R0J
A13R3504	307-0446-00			RES NTWK,FXD,FI:10K OHM,20%,(9)RES	11236	750-101-R10K
A13R3506	321-0376-00			RES,FXD,FILM:80.6K OHM,1%,0.125W,TC=T0	19701	5043ED80K60F
A13R3507	321-0405-00			RES,FXD,FILM:162K OHM,1%,0.125W,TC=T0	07716	CEAD16202F
A13R3508	321-0434-00			RES,FXD,FILM:324K OHM,1%,0.125W,TC=T0	07716	CEAD32402F
A13R3510	311-2232-00			RES,VAR,NONWW:TRMR,2K OHM,20%,0.5W LINEAR	TK1450	GF06UT 2K
A13R3511	315-0332-00			RES,FXD,FILM:3.3K OHM,5%,0.25W	57668	NTR25J-E03K3
A13R3512	321-0218-00			RES,FXD,FILM:1.82K OHM,1%,0.125W,TC=T0	19701	5033ED1K82F
A13R3513	321-0221-00			RES,FXD,FILM:1.96K OHM,1%,0.125W,TC=T0	19701	5043ED1K960F
A13R3516	321-0396-00			RES,FXD,FILM:130K OHM,1%,0.125W,TC=T0	07716	CEAD13002F
A13R3517	321-0425-00			RES,FXD,FILM:261K OHM,1%,0.125W,TC=T0	07716	CEAD26102F
A13R3518	321-0452-00			RES,FXD,FILM:499K OHM,1%,0.125W,TC=T0	19701	5043ED499K0F
A13R3522	315-0133-00			RES,FXD,FILM:13K OHM,5%,0.25W	19701	5043CX13K00J
A13R3523	315-0124-00			RES,FXD,FILM:120K OHM,5%,0.25W	19701	5043CX120K0J
A13R3524	315-0751-00			RES,FXD,FILM:750 OHM,5%,0.25W	57668	NTR25J-E750E
A13R3525	321-0299-00			RES,FXD,FILM:12.7K OHM,1%,0.125W,TC=T0	19701	5033ED12K70F
A13R3526	321-0212-00			RES,FXD,FILM:1.58K OHM,1%,0.125W,TC=70	19701	5033ED1K58F
A13R3527	315-0152-00			RES,FXD,FILM:1.5K OHM,5%,0.25W	57668	NTR25J-E01K5
A13R3529	315-0512-00			RES,FXD,FILM:5.1K OHM,5%,0.25W	57668	NTR25J-E05K1
A13R3530	315-0103-00			RES,FXD,FILM:10K OHM,5%,0.25W	19701	5043CX10K00J
A13R3535	315-0203-00			RES,FXD,FILM:20K OHM,5%,0.25W	57668	NTR25J-E 20K
A13R3536	315-0203-00			RES,FXD,FILM:20K OHM,5%,0.25W	57668	NTR25J-E 20K
A13R3537	315-0203-00			RES,FXD,FILM:20K OHM,5%,0.25W	57668	NTR25J-E 20K
A13R3538	315-0203-00			RES,FXD,FILM:20K OHM,5%,0.25W	57668	NTR25J-E 20K
A13R3539	315-0303-00			RES,FXD,FILM:30K OHM,5%,0.25W	19701	5043CX30K00J
A13R3542	321-0259-00			RES,FXD,FILM:4.87K OHM,1%,0.125W,TC=T0	07716	CEAD48700F
A13R3543	311-2230-00			RES,VAR,NONWW:TRMR,500 OHM,20%,0.50 LINEAR	TK1450	GF06UT 500
A13R3544	321-0326-00			RES,FXD,FILM:24.3K OHM,1%,0.125W,TC=T0	19701	5043ED24K30F
A13R3545	315-0472-00			RES,FXD,FILM:4.7K OHM,5%,0.25W	57668	NTR25J-E04K7
A13R3546	307-0445-00			RES NTWK,FXD,FI:4.7K OHM,20%,(9)RES	32997	4310R-101-472
A13R3550	315-0621-00			RES,FXD,FILM:620 OHM,5%,0.25W	57668	NTR25J-E620E
A13R3551	315-0472-00			RES,FXD,FILM:4.7K OHM,5%,0.25W	57668	NTR25J-E04K7
A13R3552	321-0202-00			RES,FXD,FILM:1.24K OHM,1%,0.125W,TC=T0	24546	NA55D1241F
A13R3553	321-0202-00			RES,FXD,FILM:1.24K OHM,1%,0.125W,TC=T0	24546	NA55D1241F
A13R3554	321-0254-00			RES,FXD,FILM:4.32K OHM,1%,0.125W,TC=T0	07716	CEAD43200F
A13R3555	321-0301-00			RES,FXD,FILM:13.3K OHM,1%,0.125W,TC=T0	07716	CEAD13301F
A13R3557	321-0251-00			RES,FXD,FILM:4.02K OHM,1%,0.125W,TC=T0	19701	5033ED4K020F
A13R3558	315-0203-00			RES,FXD,FILM:20K OHM,5%,0.25W	57668	NTR25J-E 20K
A13R3559	315-0272-00			RES,FXD,FILM:2.7K OHM,5%,0.25W	57668	NTR25J-E02K7
A13R3560	311-2232-00			RES,VAR,NONWW:TRMR,2K OHM,20%,0.5W LINEAR	TK1450	GF06UT 2K
A13R3563	307-0696-00			RES NTWK,FXD,FI:7,10K OHM,2%,0.15W	01121	208A103
A13R3564	321-0318-00			RES,FXD,FILM:20.0K OHM,1%,0.125W,TC=T0	19701	5033ED20K00F
A13R3565	321-0259-00			RES,FXD,FILM:4.87K OHM,1%,0.125W,TC=T0	07716	CEAD48700F
A13R3566	321-0430-00			RES,FXD,FILM:294K OHM,1%,0.125W,TC=T0	07716	CEAD29402F
A13R3567	321-0399-00			RES,FXD,FILM:140K OHM,1%,0.125W,TC=T0	07716	CEAD14002F
A13R3568	321-0367-00			RES,FXD,FILM:64.9K OHM,1%,0.125W,TC=T0	07716	CEAD64901F
A13R3569	321-0331-00			RES,FXD,FILM:27.4K OHM,1%,0.125W,TC=T0	19701	5043ED27K40F
A13R3571	315-0183-00			RES,FXD,FILM:18K OHM,5%,0.25W	19701	5043CX18K00J
A13R3576	321-0251-00			RES,FXD,FILM:4.02K OHM,1%,0.125W,TC=T0	19701	5033ED4K020F
A13R3577	321-0218-00			RES,FXD,FILM:1.82K OHM,1%,0.125W,TC=T0	19701	5033ED1K82F
A13R3579	321-0221-00			RES,FXD,FILM:1.96K OHM,1%,0.125W,TC=T0	19701	5043ED1K960F
A13R3580	321-0254-00			RES,FXD,FILM:4.32K OHM,1%,0.125W,TC=T0	07716	CEAD43200F
A13R3586	307-0651-00			RES NTWK,FXD,FI:5,3.3K OHM,5%,0.150W	11236	750-61-R3.3K OHM

http://manoman.sqhill.com

Component No.	Tektronix Part No.	Serial/Assembly No. Effective	Dscont	Name & Description	Mfr. Code	Mfr. Part No.
A13R3588	321-0353-00			RES,FXD,FILM:46.4K OHM,1%,0.125W,TC=T0	07716	CEA046401F
A13R3589	321-0335-00			RES,FXD,FILM:30.1K OHM,1%,0.125W,TC=T0	57668	RB14FXE30K1
A13R3590	321-0321-00			RES,FXD,FILM:21.5K OHM,1%,0.125W,TC=T0	07716	CEA021501F
A13R3591	321-0310-00			RES,FXD,FILM:16.5K OHM,1%,0.125W,TC=T0	19701	5033ED16K50F
A13R3592	321-0301-00			RES,FXD,FILM:13.3K OHM,1%,0.125W,TC=T0	07716	CEA013301F
A13R3593	321-0304-00			RES,FXD,FILM:14.3K OHM,1%,0.125W,TC=T0	19701	5033ED14K30F
A13R3596	321-0251-00			RES,FXD,FILM:4.02K OHM,1%,0.125W,TC=T0	19701	5033ED4K020F
A13R3597	321-0254-00			RES,FXD,FILM:4.32K OHM,1%,0.125W,TC=T0	07716	CEA043200F
A13R3598	315-0203-00			RES,FXD,FILM:20K OHM,5%,0.25W	57668	NTR25J-E 20K
A13U3420	156-0043-03			MICROCKT,DGTL:QUAD 2-INP NOR GATE,SCRN	18324	N7402(NB OR FB)
A13U3426	155-0021-01			MICROCKT,DGTL:SCAN OSCILLATOR & LOGIC	80009	155-0021-01
A13U3427	156-1172-01			MICROCKT,DGTL:DUAL 4 BIT BIN CNTR,SCRN	01295	SN74LS393NP3
A13U3457	156-0730-02			MICROCKT,DGTL:QUAD 2-INP NOR BFR,SCRN	01295	SN74LS33NP3
A13U3459	155-0017-00			MICROCKT,DGTL:BCD DECIMAL	80009	155-0017-00
A13U3462	156-0388-03			MICROCKT,DGTL:DUAL D FLIP-FLOP,SCRN	01295	SN74LS74ANP3
A13U3485	155-0014-01			MICROCKT,DGTL:A-D CONVERTER	80009	155-0014-01
A13U3486	156-1177-01			MICROCKT,DGTL:STET LINE PRIORITY ENCODER	01295	SN74LS147NP3
A13U3502	156-1172-01			MICROCKT,DGTL:DUAL 4 BIT BIN CNTR,SCRN	01295	SN74LS393NP3
A13U3503	160-2997-00			MICROCKT,DGTL:4096 X 8 EPROM,PRGM	80009	160-2997-00
A13U3504	156-0865-02			MICROCKT,DGTL:OCTAL D FF W/CLEAR,SCRN	01295	SN74LS273NP3
A13U3510	156-1191-00			MICROCKT,LINEAR:DUAL BI-FET OPNL AMPL	01295	TL072ACP
A13U3532	155-0018-00			MICROCKT,DGTL:ZERO LOGIC	80009	155-0018-00
A13U3544	155-0014-01			MICROCKT,DGTL:A-D CONVERTER	80009	155-0014-01
A13U3546	156-1177-01			MICROCKT,DGTL:STET LINE PRIORITY ENCODER	01295	SN74LS147NP3
A13U3551	156-0730-02			MICROCKT,DGTL:QUAD 2-INP NOR BFR,SCRN	01295	SN74LS33NP3
A13U3557	156-1191-00			MICROCKT,LINEAR:DUAL BI-FET OPNL AMPL	01295	TL072ACP
A13U3563	156-0140-02			MICROCKT,DGTL:HEX BUFFERS W/OC HV OUT,	18324	N7417(NB OR FB)
A13U3564	156-0480-02			MICROCKT,DGTL:QUAD 2-INP & GATE,SCRN,	01295	SN74LS08NP3
A13U3576	156-1191-00			MICROCKT,LINEAR:DUAL BI-FET OPNL AMPL	01295	TL072ACP
A13VR3485	152-0405-00			SEMICOND DVC,DI:ZEN,SI,15V,5%,1W,T0-41	12954	DZ841205A
A13VR3486	152-0405-00			SEMICOND DVC,DI:ZEN,SI,15V,5%,1W,T0-41	12954	DZ841205A
A13VR3487	152-0405-00			SEMICOND DVC,DI:ZEN,SI,15V,5%,1W,T0-41	12954	DZ841205A

http://manoman.sqhill.com

Component No.	Tektronix Part No.	Serial/Assembly No. Effective	Dscont	Name & Description	Mfr. Code	Mfr. Part No.
A14	620-0283-02			POWER SUPPLY:	80009	620-0283-02

http://manoman.sqhill.com

Component No.	Tektronix Part No.	Serial/Assembly No. Effective	Dscont	Name & Description	Mfr. Code	Mfr. Part No.
A14A1	670-5959-04			CIRCUIT BD ASSY:CONTROLLED RECTIFIER	80009	670-5959-04
A14A1C52	285-1340-00			CAP,FXD,MTLZD:0.01UF,10%,63V	55112	185/0.01/K/63AAA
A14A1C54	290-0573-00			CAP,FXD,ELCTLT:2.7UF,20%,50V	05397	T368B275M050AS
A14A1C55	283-0028-00			CAP,FXD,CER DI:0.0022UF,20%,50V	59660	0805585Y5S0222M
A14A1C64	290-0263-00			CAP,FXD,ELCTLT:2.7UF,10%,15V	05397	T320A275K015AS
A14A1C66	285-1340-00			CAP,FXD,MTLZD:0.01UF,10%,63V	55112	185/0.01/K/63AAA
A14A1C67	290-0573-00			CAP,FXD,ELCTLT:2.7UF,20%,50V	05397	T368B275M050AS
A14A1C70	285-1338-00			CAP,FXD,MTLZD:1.0UF,10%,5V	55112	185/1.0/K/50/AGA
A14A1C71	285-1338-00			CAP,FXD,MTLZD:1.0UF,10%,5V	55112	185/1.0/K/50/AGA
A14A1C74	283-0594-00			CAP,FXD,MICA DI:0.001UF,1%,100V	00853	D151F102F0
A14A1C77	283-0084-00			CAP,FXD,CER DI:270PF,5%,1000V	59660	838533X5F02715
A14A1C78	283-0084-00			CAP,FXD,CER DI:270PF,5%,1000V	59660	838533X5F02715
A14A1C80	285-1339-00			CAP,FXD,MTLZD:0.022UF,10%,63V	55112	185/0.022/K63AAA
A14A1C86	290-0580-00			CAP,FXD,ELCTLT:0.27UF,20%,50V	05397	T368A274M050AZ
A14A1C90	290-0778-00			CAP,FXD,ELCTLT:1UF,+50 -10%,50V,NPLZD	54473	ECE-A50N1
A14A1C92	285-1123-00			CAP,FXD,PLASTIC:1UF,20%,200V	14731	230B1C105M
A14A1C94	285-0695-00			CAP,FXD,PLASTIC:0.01UF,10%,200V	56289	192P10392
A14A1C121	285-0892-00			CAP,FXD,PLASTIC:0.22UF,10%,200V	14752	650B1C224K
A14A1C124	290-0758-00			CAP,FXD,ELCTLT:2.2UF,+50-10%,200V	56289	502D227
A14A1C125	290-0758-00			CAP,FXD,ELCTLT:2.2UF,+50-10%,200V	56289	502D227
A14A1C132	290-0768-00			CAP,FXD,ELCTLT:10UF,+50-10%,100VDC	54473	ECE-A100V10L
A14A1C133	290-0768-00			CAP,FXD,ELCTLT:10UF,+50-10%,100VDC	54473	ECE-A100V10L
A14A1C134	290-0768-00			CAP,FXD,ELCTLT:10UF,+50-10%,100VDC	54473	ECE-A100V10L
A14A1C135	290-0768-00			CAP,FXD,ELCTLT:10UF,+50-10%,100VDC	54473	ECE-A100V10L
A14A1C142	290-0772-00			CAP,FXD,ELCTLT:330UF,+50-10%,25VDC	54473	ECE-B1EV30S
A14A1C143	290-0770-00			CAP,FXD,ELCTLT:100UF,+50-10%,25VDC	54473	ECE-A25V100L
A14A1C144	290-0772-00			CAP,FXD,ELCTLT:330UF,+50-10%,25VDC	54473	ECE-B1EV30S
A14A1C145	290-0770-00			CAP,FXD,ELCTLT:100UF,+50-10%,25VDC	54473	ECE-A25V100L
A14A1C152	290-0771-00			CAP,FXD,ELCTLT:220UF,+50-10%,10VDC	55680	ULB1A221TPAANA
A14A1C153	290-0771-00			CAP,FXD,ELCTLT:220UF,+50-10%,10VDC	55680	ULB1A221TPAANA
A14A1C154	290-0898-01			CAP,FXD,ELCTLT:2600UF,+75 -10%,35V	56289	602DX262G035AA2P
A14A1C155	290-0773-00			CAP,FXD,ELCTLT:1000UF,+50-10%,10VDC	54473	ECEB10V1000L
A14A1C156	290-0771-00			CAP,FXD,ELCTLT:220UF,+50-10%,10VDC	55680	ULB1A221TPAANA
A14A1C172	290-0746-00			CAP,FXD,ELCTLT:47UF,+50-10%,16V	54473	ECE-A6V47L
A14A1C179	285-1338-00			CAP,FXD,MTLZD:1.0UF,10%,5V	55112	185/1.0/K/50/AGA
A14A1C183	285-1300-01			CAP,FXD,MTLZD:0.1UF,10%,63V	55112	185/0.1/K/63/ABA
A14A1CR52	152-0333-00			SEMICOND DVC,DI:SW,SI,55V,200MA,DO-35	07263	FDH-6012
A14A1CR59	152-0333-00			SEMICOND DVC,DI:SW,SI,55V,200MA,DO-35	07263	FDH-6012
A14A1CR65	152-0141-02			SEMICOND DVC,DI:SW,SI,30V,150MA,30V,DO-35	03508	DA2527 (1N4152)
A14A1CR66	152-0141-02			SEMICOND DVC,DI:SW,SI,30V,150MA,30V,DO-35	03508	DA2527 (1N4152)
A14A1CR73	152-0333-00			SEMICOND DVC,DI:SW,SI,55V,200MA,DO-35	07263	FDH-6012
A14A1CR74	152-0333-00			SEMICOND DVC,DI:SW,SI,55V,200MA,DO-35	07263	FDH-6012
A14A1CR75	152-0333-00			SEMICOND DVC,DI:SW,SI,55V,200MA,DO-35	07263	FDH-6012
A14A1CR76	152-0333-00			SEMICOND DVC,DI:SW,SI,55V,200MA,DO-35	07263	FDH-6012
A14A1CR81	152-0333-00			SEMICOND DVC,DI:SW,SI,55V,200MA,DO-35	07263	FDH-6012
A14A1CR82	152-0333-00			SEMICOND DVC,DI:SW,SI,55V,200MA,DO-35	07263	FDH-6012
A14A1CR83	152-0333-00			SEMICOND DVC,DI:SW,SI,55V,200MA,DO-35	07263	FDH-6012
A14A1CR84	152-0333-00			SEMICOND DVC,DI:SW,SI,55V,200MA,DO-35	07263	FDH-6012
A14A1CR90	152-0141-02			SEMICOND DVC,DI:SW,SI,30V,150MA,30V,DO-35	03508	DA2527 (1N4152)
A14A1CR120	152-0242-00			SEMICOND DVC,DI:SIG,SI,225V,0.2A,DO-7	07263	FDH5004
A14A1CR121	152-0242-00			SEMICOND DVC,DI:SIG,SI,225V,0.2A,DO-7	07263	FDH5004
A14A1CR122	152-0242-00			SEMICOND DVC,DI:SIG,SI,225V,0.2A,DO-7	07263	FDH5004
A14A1CR123	152-0242-00			SEMICOND DVC,DI:SIG,SI,225V,0.2A,DO-7	07263	FDH5004
A14A1CR124	152-0242-00			SEMICOND DVC,DI:SIG,SI,225V,0.2A,DO-7	07263	FDH5004
A14A1CR125	152-0242-00			SEMICOND DVC,DI:SIG,SI,225V,0.2A,DO-7	07263	FDH5004
A14A1CR127	152-0242-00			SEMICOND DVC,DI:SIG,SI,225V,0.2A,DO-7	07263	FDH5004
A14A1CR130	152-0586-00			SEMICOND DVC,DI:RECT,SI,600V,0.5A	25403	BYV96D OR BYV95C
A14A1CR131	152-0586-00			SEMICOND DVC,DI:RECT,SI,600V,0.5A	25403	BYV96D OR BYV95C
A14A1CR132	152-0586-00			SEMICOND DVC,DI:RECT,SI,600V,0.5A	25403	BYV96D OR BYV95C

http://manoman.sqhill.com

Component No.	Tektronix Part No.	Serial/Assembly No. Effective	Dscont	Name & Description	Mfr. Code	Mfr. Part No.
A14A1CR133	152-0586-00			SEMICOND DVC,DI:RECT,SI,600V,0.5A	25403	BYV96D OR BYV95C
A14A1CR140	152-0397-00			SEMICOND DVC,DI:RECT,SI,500V,12A	80009	152-0397-00
A14A1CR141	152-0397-00			SEMICOND DVC,DI:RECT,SI,500V,12A	80009	152-0397-00
A14A1CR142	152-0397-00			SEMICOND DVC,DI:RECT,SI,500V,12A	80009	152-0397-00
A14A1CR143	152-0397-00			SEMICOND DVC,DI:RECT,SI,500V,12A	80009	152-0397-00
A14A1CR150	152-0586-00			SEMICOND DVC,DI:RECT,SI,600V,0.5A	25403	BYV96D OR BYV95C
A14A1CR151	152-0692-00			SEMICOND DVC,DI:DUAL RECT,SI,30A,20V,TO-3	04713	SD241
A14A1CR153	152-0586-00			SEMICOND DVC,DI:RECT,SI,600V,0.5A	25403	BYV96D OR BYV95C
A14A1CR161	152-0725-00			SEMICOND DVC,DI:SI,SCHOTTKY,20V,1.2PF,DO-35	21847	A2X1582
A14A1CR171	152-0141-02			SEMICOND DVC,DI:SW,SI,30V,150MA,30V,DO-35	03508	DA2527 (1N4152)
A14A1CR183	152-0141-02			SEMICOND DVC,DI:SW,SI,30V,150MA,30V,DO-35	03508	DA2527 (1N4152)
A14A1L132	108-0473-00			COIL,RF:FIXED,174UH	80009	108-0473-00
A14A1L134	108-0473-00			COIL,RF:FIXED,174UH	80009	108-0473-00
A14A1L142	108-0680-00			COIL,RF:FIXED,27UH	80009	108-0680-00
A14A1L144	108-0680-00			COIL,RF:FIXED,27UH	80009	108-0680-00
A14A1L152	108-0473-00			COIL,RF:FIXED,174UH	80009	108-0473-00
A14A1L154	108-0556-00			COIL,RF:FIXED,12UH	80009	108-0556-00
A14A1L156	108-0337-00			COIL,RF:FIXED,25UH	80009	108-0337-00
A14A1Q52	151-0302-00			TRANSISTOR:NPN,SI,TO-18	04713	ST899
A14A1Q54	151-0273-00			TRANSISTOR:SELECTED	03508	X16E3616
A14A1Q162	151-0190-00			TRANSISTOR:NPN,SI,TO-92	80009	151-0190-00
A14A1Q171	151-0190-00			TRANSISTOR:NPN,SI,TO-92	80009	151-0190-00
A14A1Q173	151-0188-00			TRANSISTOR:PNP,SI,TO-92	80009	151-0188-00
A14A1Q177	151-0188-00			TRANSISTOR:PNP,SI,TO-92	80009	151-0188-00
A14A1R52	315-0512-00			RES,FXD,FILM:5.1K OHM,5%,0.25W	57668	NTR25J-E05K1
A14A1R54	315-0753-00			RES,FXD,FILM:75K OHM,5%,0.25W	57668	NTR25J-E75K0
A14A1R55	315-0201-00			RES,FXD,FILM:200 OHM,5%,0.25W	57668	NTR25J-E200E
A14A1R59	315-0562-00			RES,FXD,FILM:5.6K OHM,5%,0.25W	57668	NTR25J-E05K6
A14A1R60	315-0224-00			RES,FXD,FILM:220K OHM,5%,0.25W	57668	NTR25J-E220K
A14A1R61	315-0123-00			RES,FXD,FILM:12K OHM,5%,0.25W	57668	NTR25J-E12K0
A14A1R62	315-0301-00			RES,FXD,FILM:300 OHM,5%,0.25W	57668	NTR25J-E300E
A14A1R63	315-0470-00			RES,FXD,FILM:47 OHM,5%,0.25W	57668	NTR25J-E47E0
A14A1R64	315-0102-00			RES,FXD,FILM:1K OHM,5%,0.25W	57668	NTR25JE01K0
A14A1R66	315-0202-00			RES,FXD,FILM:2K OHM,5%,0.25W	57668	NTR25J-E 2K
A14A1R67	315-0154-00			RES,FXD,FILM:150K OHM,5%,0.25W	57668	NTR25J-E150K
A14A1R70	315-0560-00			RES,FXD,FILM:56 OHM,5%,0.25W	57668	NTR25J-E56E0
A14A1R71	315-0560-00			RES,FXD,FILM:56 OHM,5%,0.25W	57668	NTR25J-E56E0
A14A1R74	321-0346-00			RES,FXD,FILM:39.2K OHM,1%,0.125W,TC=T0	19701	5043ED39K20F
A14A1R80	315-0471-00			RES,FXD,FILM:470 OHM,5%,0.25W	57668	NTR25J-E470E
A14A1R81	321-0334-00			RES,FXD,FILM:29.4K OHM,1%,0.125W,TC=T0	07716	CEAD29401F
A14A1R82	321-0340-00			RES,FXD,FILM:34.0K OHM,1%,0.125W,TC=T0	19701	5043ED34K00F
A14A1R83	321-0193-00			RES,FXD,FILM:1K OHM,1%,0.125W,TC=T0	19701	5033ED1K00F
A14A1R84	321-0005-00			RES,FXD,FILM:11.0 OHM,1%,0.125W,TC=T0	91637	CMF55116G11R00F
A14A1R86	321-0284-00			RES,FXD,FILM:8.87K OHM,1%,0.125W,TC=T0	19701	5043ED8K870F
A14A1R87	321-0283-00			RES,FXD,FILM:8.66K OHM,1%,0.125W,TC=T0	19701	5043ED8K660F
A14A1R88	315-0122-00			RES,FXD,FILM:1.2K OHM,5%,0.25W	57668	NTR25J-E01K2
A14A1R90	315-0272-00			RES,FXD,FILM:2.7K OHM,5%,0.25W	57668	NTR25J-E02K7
A14A1R92	315-0105-00			RES,FXD,FILM:1M OHM,5%,0.25W	19701	5043CX1M000J
A14A1R93	311-2273-00			RES,VAR,NONWW:TRMR,2K OHM,20%,0.5W	TK1450	GF06VT 2 K OHM
A14A1R94	315-0203-00			RES,FXD,FILM:20K OHM,5%,0.25W	57668	NTR25J-E 20K
A14A1R95	321-0419-00			RES,FXD,FILM:226K OHM,1%,0.125W,TC=T0	07716	CEAD22602F
A14A1R120	315-0150-00			RES,FXD,FILM:15 OHM,5%,0.25W	19701	5043CX15R00J
A14A1R121	315-0101-00			RES,FXD,FILM:100 OHM,5%,0.25W	57668	NTR25J-E 100E
A14A1R127	301-0391-00			RES,FXD,FILM:390 OHM,5%,0.5W	01121	EB3915
A14A1R161	315-0473-00			RES,FXD,FILM:47K OHM,5%,0.25W	57668	NTR25J-E47K0
A14A1R162	315-0472-00			RES,FXD,FILM:4.7K OHM,5%,0.25W	57668	NTR25J-E04K7
A14A1R170	315-0100-00			RES,FXD,FILM:10 OHM,5%,0.25W	19701	5043CX10RR00J
A14A1R171	315-0274-00			RES,FXD,FILM:270K OHM,5%,0.25W	57668	NTR25J-E270K
A14A1R172	315-0474-00			RES,FXD,FILM:470K OHM,5%,0.25W	19701	5043CX470K0J92U

http://manoman.sqhill.com

Component No.	Tektronix Part No.	Serial/Assembly No. Effective	Dscont	Name & Description	Mfr. Code	Mfr. Part No.
A14A1R173	315-0272-00			RES,FXD,FILM:2.7K OHM,5%,0.25W	57668	NTR25J-E02K7
A14A1R174	315-0182-00			RES,FXD,FILM:1.8K OHM,5%,0.25W	57668	NTR25J-E1K8
A14A1R176	315-0203-00			RES,FXD,FILM:20K OHM,5%,0.25W	57668	NTR25J-E 20K
A14A1R177	315-0203-00			RES,FXD,FILM:20K OHM,5%,0.25W	57668	NTR25J-E 20K
A14A1R179	315-0472-00			RES,FXD,FILM:4.7K OHM,5%,0.25W	57668	NTR25J-E04K7
A14A1R181	315-0334-00			RES,FXD,FILM:330K OHM,5%,0.25W	57668	NTR25J-E 330K
A14A1R182	315-0754-00			RES,FXD,FILM:750K OHM,5%,0.25W,MI	19701	5043CX750K0J
A14A1U75	155-0067-02			MICROCKT,DGTL:POWER SPLY RGLTR	80009	155-0067-02
A14A1U179	156-0481-02			MICROCKT,DGTL:TRIPLE 3-INP & GATE,SCRN	01295	SN74LS11NP3
A14A1VR52	152-0590-00			SEMICOND DVC,DI:ZEN,SI,18V,5%,0.4W,DO-7	04713	SZG35014K2
A14A1VR72	152-0243-00			SEMICOND DVC,DI:ZEN,SI,15V,5%,0.4W,DO-7	04713	SZ13203 (1N965B)
A14A1VR88	152-0212-00			SEMICOND DVC,DI:ZEN,SI,9V,5%,0.5W,DO-7	04713	SZ50646RL

http://manoman.sqhill.com

Component No.	Tektronix Part No.	Serial/Assembly No. Effective	Dscont	Name & Description	Mfr. Code	Mfr. Part No.
A14A2	670-5960-04			CIRCUIT BD ASSY:LV REGULATOR	80009	670-5960-04
A14A2C8	290-0778-00			CAP,FXD,ELCTLT:1UF,+50 -10%,50V,NPLZD	54473	ECE-A50N1
A14A2C12	290-0778-00			CAP,FXD,ELCTLT:1UF,+50 -10%,50V,NPLZD	54473	ECE-A50N1
A14A2C13	283-0047-00			CAP,FXD,CER DI:270PF,5%,500V	59660	0831604Z5F0271J
A14A2C15	281-0629-00			CAP,FXD,CER DI:33PF,5%,600V	52763	2RDPLZ007 33P0JC
A14A2C17	290-0778-00			CAP,FXD,ELCTLT:1UF,+50 -10%,50V,NPLZD	54473	ECE-A50N1
A14A2C24	283-0110-00			CAP,FXD,CER DI:0.005UF,+80-20%,150V	59660	855-547-E-502Z
A14A2C36	281-0775-00			CAP,FXD,CER DI:0.1UF,20%,50V	04222	MA205E104MAA
A14A2C44	283-0067-00			CAP,FXD,CER DI:0.001UF,10%,200V	59660	835-515-YSE0102K
A14A2C45	281-0511-00			CAP,FXD,CER DI:22PF,+/-2.2PF,500V	52763	2RDPLZ007 22P0KC
A14A2C47	290-0778-00			CAP,FXD,ELCTLT:1UF,+50 -10%,50V,NPLZD	54473	ECE-A50N1
A14A2C54	283-0100-00			CAP,FXD,CER DI:0.0047UF,10%,200V	04222	SR306A472KAA
A14A2C64	281-0540-00			CAP,FXD,CER DI:51PF,5%,500V	59660	301-000U2J0510J
A14A2C68	290-0420-00			CAP,FXD,ELCTLT:0.68UF,20%,75V	05397	T110A684M075AS
A14A2C69	283-0067-00			CAP,FXD,CER DI:0.001UF,10%,200V	59660	835-515-YSE0102K
A14A2C84	281-0629-00			CAP,FXD,CER DI:33PF,5%,600V	52763	2RDPLZ007 33P0JC
A14A2C88	290-0420-00			CAP,FXD,ELCTLT:0.68UF,20%,75V	05397	T110A684M075AS
A14A2C114	281-0605-00			CAP,FXD,CER DI:200PF,10%,500V	59660	301000Y5D201K
A14A2C156	290-0745-00			CAP,FXD,ELCTLT:22UF,+50-10%,25V	54473	ECE-A25V22L
A14A2CR7	152-0333-00			SEMICOND DVC,DI:SW,SI,55V,200MA,DO-35	07263	FDH-6012
A14A2CR8	152-0333-00			SEMICOND DVC,DI:SW,SI,55V,200MA,DO-35	07263	FDH-6012
A14A2CR10	152-0333-00			SEMICOND DVC,DI:SW,SI,55V,200MA,DO-35	07263	FDH-6012
A14A2CR11	152-0333-00			SEMICOND DVC,DI:SW,SI,55V,200MA,DO-35	07263	FDH-6012
A14A2CR15	152-0333-00			SEMICOND DVC,DI:SW,SI,55V,200MA,DO-35	07263	FDH-6012
A14A2CR19	152-0141-02			SEMICOND DVC,DI:SW,SI,30V,150MA,30V,DO-35	03508	DA2527 (1N4152)
A14A2CR20	152-0141-02			SEMICOND DVC,DI:SW,SI,30V,150MA,30V,DO-35	03508	DA2527 (1N4152)
A14A2CR21	152-0141-02			SEMICOND DVC,DI:SW,SI,30V,150MA,30V,DO-35	03508	DA2527 (1N4152)
A14A2CR22	152-0333-00			SEMICOND DVC,DI:SW,SI,55V,200MA,DO-35	07263	FDH-6012
A14A2CR28	152-0066-03			SEMICOND DVC,DI:RECT,SI,400V,1A,DO-41	14433	LG4017
A14A2CR45	152-0333-00			SEMICOND DVC,DI:SW,SI,55V,200MA,DO-35	07263	FDH-6012
A14A2CR49	152-0141-02			SEMICOND DVC,DI:SW,SI,30V,150MA,30V,DO-35	03508	DA2527 (1N4152)
A14A2CR50	152-0141-02			SEMICOND DVC,DI:SW,SI,30V,150MA,30V,DO-35	03508	DA2527 (1N4152)
A14A2CR51	152-0141-02			SEMICOND DVC,DI:SW,SI,30V,150MA,30V,DO-35	03508	DA2527 (1N4152)
A14A2CR52	152-0333-00			SEMICOND DVC,DI:SW,SI,55V,200MA,DO-35	07263	FDH-6012
A14A2CR58	152-0066-03			SEMICOND DVC,DI:RECT,SI,400V,1A,DO-41	14433	LG4017
A14A2CR64	152-0333-00			SEMICOND DVC,DI:SW,SI,55V,200MA,DO-35	07263	FDH-6012
A14A2CR76	152-0066-03			SEMICOND DVC,DI:RECT,SI,400V,1A,DO-41	14433	LG4017
A14A2CR84	152-0333-00			SEMICOND DVC,DI:SW,SI,55V,200MA,DO-35	07263	FDH-6012
A14A2CR96	152-0066-03			SEMICOND DVC,DI:RECT,SI,400V,1A,DO-41	14433	LG4017
A14A2CR114	152-0333-00			SEMICOND DVC,DI:SW,SI,55V,200MA,DO-35	07263	FDH-6012
A14A2CR132	152-0066-03			SEMICOND DVC,DI:RECT,SI,400V,1A,DO-41	14433	LG4017
A14A2CR142	152-0423-00			SEMICOND DVC,DI:RECT,SI,400V,3A,M176A	04713	1N5000
A14A2CR143	152-0141-02			SEMICOND DVC,DI:SW,SI,30V,150MA,30V,DO-35	03508	DA2527 (1N4152)
A14A2CR144	152-0423-00			SEMICOND DVC,DI:RECT,SI,400V,3A,M176A	04713	1N5000
A14A2CR148	152-0141-02			SEMICOND DVC,DI:SW,SI,30V,150MA,30V,DO-35	03508	DA2527 (1N4152)
A14A2Q22	151-0350-00			TRANSISTOR:PNP,SI,TO-92	04713	SPS6700
A14A2Q28	151-0656-00			TRANSISTOR:NPN,SI,TO-220	02735	2N6044
A14A2Q34	151-0103-00			TRANSISTOR:NPN,SI,TO-5	04713	SM1307
A14A2Q38	151-0134-00			TRANSISTOR:PNP,SI,TO-39	04713	SM3195
A14A2Q52	151-0347-00			TRANSISTOR:NPN,SI,TO-92	04713	SPS7951
A14A2Q58	151-0657-00			TRANSISTOR:PNP,SI,TO-220	04713	SJE1973
A14A2Q68	151-0347-00			TRANSISTOR:NPN,SI,TO-92	04713	SPS7951
A14A2Q74	151-0656-00			TRANSISTOR:NPN,SI,TO-220	02735	2N6044
A14A2Q88	151-0342-00			TRANSISTOR:PNP,SI,TO-92	07263	S035928
A14A2Q94	151-0657-00			TRANSISTOR:PNP,SI,TO-220	04713	SJE1973
A14A2Q118	151-0302-00			TRANSISTOR:NPN,SI,TO-18	04713	ST899
A14A2Q122	151-0349-00			TRANSISTOR:NPN,SI,SELECTED,TO-127	04713	SJE924
A14A2Q126	151-0477-01			TRANSISTOR:SCREENED	80009	151-0477-01
A14A2Q144	151-0190-00			TRANSISTOR:NPN,SI,TO-92	80009	151-0190-00

http://manoman.sqhill.com

Component No.	Tektronix Part No.	Serial/Assembly No. Effective	Dscont	Name & Description	Mfr. Code	Mfr. Part No.
A14A2Q148	151-0373-00			TRANSISTOR:PNP,SI,TO-127	04713	SJE925
A14A2R1	321-0369-00			RES,FXD,FILM:68.1K OHM,1%,0.125W,TC=T0	19701	5043ED68K10F
A14A2R2	321-0386-00			RES,FXD,FILM:102K OHM,1%,0.125W,TC=T0	07716	CEAD10202F
A14A2R3	321-0336-00			RES,FXD,FILM:30.9K OHM,1%,0.125W,TC=T0	19701	5043ED30K90F
A14A2R4	321-0290-00			RES,FXD,FILM:10.2K OHM,1%,0.125W,TC=T0	19701	5043ED10K20F
A14A2R5	321-0319-00			RES,FXD,FILM:20.5K OHM,1%,0.125W,TC=T0	19701	5033ED20K50F
A14A2R8	315-0332-00			RES,FXD,FILM:3.3K OHM,5%,0.25W	57668	NTR25J-E03K3
A14A2R10	323-0265-00			RES,FXD,FILM:5.62K OHM,1%,0.5W,TC=T0	75042	CECT0-5621F
A14A2R12	315-0512-00			RES,FXD,FILM:5.1K OHM,5%,0.25W	57668	NTR25J-E05K1
A14A2R13	315-0103-00			RES,FXD,FILM:10K OHM,5%,0.25W	19701	5043CX10K00J
A14A2R14	321-0730-06			RES,FXD,FILM:5.703K OHM,0.2%,0.125W,TC=T9	19701	5033RE5K703C
A14A2R15	311-1225-00			RES,VAR,NONWW:TRMR,1K OHM,0.5W	32997	3386F-T04-102
A14A2R16	321-0331-09			RES,FXD,FILM:27.4K OHM,1%,0.125W,TC=T9	19701	5033RE27K4F
A14A2R17	315-0151-00			RES,FXD,FILM:150 OHM,5%,0.25W	57668	NTR25J-E150E
A14A2R21	315-0104-00			RES,FXD,FILM:100K OHM,5%,0.25W	57668	NTR25J-E100K
A14A2R22	315-0821-00			RES,FXD,FILM:820 OHM,5%,0.25W	19701	5043CX820R0J
A14A2R24	315-0331-00			RES,FXD,FILM:330 OHM,5%,0.25W	57668	NTR25J-E330E
A14A2R25	315-0471-00			RES,FXD,FILM:470 OHM,5%,0.25W	57668	NTR25J-E470E
A14A2R26	315-0181-00			RES,FXD,FILM:180 OHM,5%,0.25W	57668	NTR25J-E180E
A14A2R27	315-0512-00			RES,FXD,FILM:5.1K OHM,5%,0.25W	57668	NTR25J-E05K1
A14A2R28	308-0365-00			RES,FXD,WW:1.5 OHM,5%,3W	00213	1240S-1.5-5
A14A2R32	315-0432-00			RES,FXD,FILM:4.3K OHM,5%,0.25W	57668	NTR25J-E04K3
A14A2R34	304-0102-00			RES,FXD,CMPSN:1K OHM,10%,1W	01121	GB1021
A14A2R36	315-0121-00			RES,FXD,FILM:120 OHM,5%,0.25W	19701	5043CX120R0J
A14A2R37	315-0123-00			RES,FXD,FILM:12K OHM,5%,0.25W	57668	NTR25J-E12K0
A14A2R38	301-0182-00			RES,FXD,FILM:1.8K OHM,5%,0.5W	19701	5053CX1K800J
A14A2R42	315-0203-00			RES,FXD,FILM:20K OHM,5%,0.25W	57668	NTR25J-E 20K
A14A2R44	315-0103-00			RES,FXD,FILM:10K OHM,5%,0.25W	19701	5043CX10K00J
A14A2R45	321-0924-07			RES,FXD,FILM:40K OHM,0.1%,0.125W,TC=T9	19701	5033RE40K00B
A14A2R46	321-0924-07			RES,FXD,FILM:40K OHM,0.1%,0.125W,TC=T9	19701	5033RE40K00B
A14A2R47	315-0151-00			RES,FXD,FILM:150 OHM,5%,0.25W	57668	NTR25J-E150E
A14A2R51	315-0104-00			RES,FXD,FILM:100K OHM,5%,0.25W	57668	NTR25J-E100K
A14A2R52	315-0821-00			RES,FXD,FILM:820 OHM,5%,0.25W	19701	5043CX820R0J
A14A2R54	315-0511-00			RES,FXD,FILM:510 OHM,5%,0.25W	19701	5043CX510R0J
A14A2R55	315-0471-00			RES,FXD,FILM:470 OHM,5%,0.25W	57668	NTR25J-E470E
A14A2R56	315-0181-00			RES,FXD,FILM:180 OHM,5%,0.25W	57668	NTR25J-E180E
A14A2R57	315-0512-00			RES,FXD,FILM:5.1K OHM,5%,0.25W	57668	NTR25J-E05K1
A14A2R58	308-0686-00			RES,FXD,WW:2.2 OHM,5%,2W	75042	BWH-2R200J
A14A2R61	321-0332-07			RES,FXD,FILM:28.0K OHM,0.1%,0.125W,TC=T9	19701	5033RE28K00B
A14A2R62	321-1296-07			RES,FXD,FILM:12.0K OHM,0.1%,0.125W,TC=T9	19701	5033RE12K00B
A14A2R63	315-0152-00			RES,FXD,FILM:1.5K OHM,5%,0.25W	57668	NTR25J-E01K5
A14A2R67	315-0123-00			RES,FXD,FILM:12K OHM,5%,0.25W	57668	NTR25J-E12K0
A14A2R68	315-0302-00			RES,FXD,FILM:3K OHM,5%,0.25W	57668	NTR25J-E03K0
A14A2R69	315-0822-00			RES,FXD,FILM:8.2K OHM,5%,0.25W	19701	5043CX8K200J
A14A2R73	315-0201-00			RES,FXD,FILM:200 OHM,5%,0.25W	57668	NTR25J-E200E
A14A2R74	315-0393-00			RES,FXD,FILM:39K OHM,5%,0.25W	57668	NTR25J-E39K0
A14A2R75	308-0804-00			RES,FXD,WW:0.025 OHM,5%,0.5W	80009	308-0804-00
A14A2R76	315-0151-00			RES,FXD,FILM:150 OHM,5%,0.25W	57668	NTR25J-E150E
A14A2R77	315-0432-00			RES,FXD,FILM:4.3K OHM,5%,0.25W	57668	NTR25J-E04K3
A14A2R80	321-0924-07			RES,FXD,FILM:40K OHM,0.1%,0.125W,TC=T9	19701	5033RE40K00B
A14A2R81	321-1296-07			RES,FXD,FILM:12.0K OHM,0.1%,0.125W,TC=T9	19701	5033RE12K00B
A14A2R82	315-0912-00			RES,FXD,FILM:9.1K OHM,5%,0.25W	57668	NTR25J-E09K1
A14A2R83	315-0102-00			RES,FXD,FILM:1K OHM,5%,0.25W	57668	NTR25JE01K0
A14A2R87	315-0123-00			RES,FXD,FILM:12K OHM,5%,0.25W	57668	NTR25J-E12K0
A14A2R88	315-0302-00			RES,FXD,FILM:3K OHM,5%,0.25W	57668	NTR25J-E03K0
A14A2R93	315-0201-00			RES,FXD,FILM:200 OHM,5%,0.25W	57668	NTR25J-E200E
A14A2R94	315-0393-00			RES,FXD,FILM:39K OHM,5%,0.25W	57668	NTR25J-E39K0
A14A2R95	308-0804-00			RES,FXD,WW:0.025 OHM,5%,0.5W	80009	308-0804-00
A14A2R96	315-0151-00			RES,FXD,FILM:150 OHM,5%,0.25W	57668	NTR25J-E150E

http://manoman.sqhill.com

Component No.	Tektronix Part No.	Serial/Assembly No. Effective	Dscont	Name & Description	Mfr. Code	Mfr. Part No.
A14A2R97	315-0432-00			RES,FXD,FILM:4.3K OHM,5%,0.25W	57668	NTR25J-E04K3
A14A2R113	321-1713-07			RES,FXD,FILM:36K OHM 0.1%,0.125W,TC=T9	19701	5033RE36K00B
A14A2R114	321-0926-07			RES,FXD,FILM:4K OHM,0.1%,0.125W,TC=T9	19701	5033RE4K00B
A14A2R121	315-0512-00			RES,FXD,FILM:5.1K OHM,5%,0.25W	57668	NTR25J-E05K1
A14A2R126	315-0131-00			RES,FXD,FILM:130 OHM,5%,0.25W	19701	5043CX130R0J
A14A2R127	315-0203-00			RES,FXD,FILM:20K OHM,5%,0.25W	57668	NTR25J-E 20K
A14A2R128	315-0203-00			RES,FXD,FILM:20K OHM,5%,0.25W	57668	NTR25J-E 20K
A14A2R129	315-0101-00			RES,FXD,FILM:100 OHM,5%,0.25W	57668	NTR25J-E 100E
A14A2R131	315-0362-00			RES,FXD,FILM:3.6K OHM,5%,0.25W	19701	5043CX3K600J
A14A2R132	315-0151-00			RES,FXD,FILM:150 OHM,5%,0.25W	57668	NTR25J-E150E
A14A2R133	308-0804-00			RES,FXD,MW:0.025 OHM,5%,0.5W	80009	308-0804-00
A14A2R134	308-0804-00			RES,FXD,MW:0.025 OHM,5%,0.5W	80009	308-0804-00
A14A2R136	315-0432-00			RES,FXD,FILM:4.3K OHM,5%,0.25W	57668	NTR25J-E04K3
A14A2R141	315-0822-00			RES,FXD,FILM:8.2K OHM,5%,0.25W	19701	5043CX8K200J
A14A2R142	315-0103-00			RES,FXD,FILM:10K OHM,5%,0.25W	19701	5043CX10K00J
A14A2R143	315-0243-00			RES,FXD,FILM:24K OHM,5%,0.25W	57668	NTR25J-E24K0
A14A2R144	315-0562-00			RES,FXD,FILM:5.6K OHM,5%,0.25W	57668	NTR25J-E05K6
A14A2R145	315-0221-00			RES,FXD,FILM:220 OHM,5%,0.25W	57668	NTR25J-E220E
A14A2R148	308-0702-00			RES,FXD,MW:0.33 OHM,5%,2W	75042	BWH-R3300J
A14A2R152	301-0561-00			RES,FXD,FILM:560 OHM,5%,0.5W	01121	EB5615
A14A2R156	301-0431-00			RES,FXD,FILM:430 OHM,5%,0.5W	19701	5053CX430R0J
A14A2U15	156-0067-12			MICROCKT,LINEAR:OPERATIONAL AMPLIFIER	01295	UA741CJG
A14A2U45	156-0067-12			MICROCKT,LINEAR:OPERATIONAL AMPLIFIER	01295	UA741CJG
A14A2U64	156-0158-03			MICROCKT,LINEAR:DUAL OPNL AMPL,CHK	80009	156-0158-03
A14A2U84	156-0158-03			MICROCKT,LINEAR:DUAL OPNL AMPL,CHK	80009	156-0158-03
A14A2U114	156-0158-03			MICROCKT,LINEAR:DUAL OPNL AMPL,CHK	80009	156-0158-03
A14A2VR10	152-0217-00			SEMICOND DVC,DI:ZEN,SI,8.2V,5%,0.4W,DO-7	04713	SZG20
A14A2VR12	152-0212-00			SEMICOND DVC,DI:ZEN,SI,9V,5%,0.5W,DO-7	04713	SZ50646RL
A14A2VR17	152-0283-00			SEMICOND DVC,DI:ZEN,SI,43V,5%,0.4W,D-07	04713	SZ14257KRL
A14A2VR32	152-0281-00			SEMICOND DVC,DI:ZEN,SI,22V,5%,0.4W,DO-7	12954	1N969B/DO-35
A14A2VR36	152-0281-00			SEMICOND DVC,DI:ZEN,SI,22V,5%,0.4W,DO-7	12954	1N969B/DO-35
A14A2VR47	152-0283-00			SEMICOND DVC,DI:ZEN,SI,43V,5%,0.4W,D-07	04713	SZ14257KRL
A14A2VR152	152-0175-01			SEMICOND DVC,DI:ZEN,SI,5.6V,5%,0.4W,DO-7	04713	SZG5021RL
A14A2VR156	152-0175-01			SEMICOND DVC,DI:ZEN,SI,5.6V,5%,0.4W,DO-7	04713	SZG5021RL

http://manoman.sqhill.com

Component No.	Tektronix Part No.	Serial/Assembly No. Effective	Dscont	Name & Description	Mfr. Code	Mfr. Part No.
A14A3	670-6259-02			CIRCUIT BD ASSY:INVERTER	80009	670-6259-02
A14A3C5	119-1168-00			CAPACITOR-RES:0.1UF,20% & 22 OHM,10%,250VAC	14752	RG1782-1
A14A3C16	290-0628-00			CAP,FXD,ELCTLT:950UF,+50-10%,200V	56289	36D7560
A14A3C17	290-0628-00			CAP,FXD,ELCTLT:950UF,+50-10%,200V	56289	36D7560
A14A3C19	283-0057-00			CAP,FXD,CER DI:0.1UF,+80-20%,200V	04222	SR306E104ZAA
A14A3C27	283-0351-00			CAP,FXD,CER DI:5000PF,20%,3000V	51406	DHR17Z5U502M3KV
A14A3C28	283-0351-00			CAP,FXD,CER DI:5000PF,20%,3000V	51406	DHR17Z5U502M3KV
A14A3C29	285-0939-00			CAP,FXD,PLASTIC:3UF,5%,400V	04099	TEK13-17
A14A3C31	290-0891-00			CAP,FXD,ELCTLT:1UF,+75 -10%,50V	55680	ULA1H010TEA
A14A3C35	283-0060-00			CAP,FXD,CER DI:100PF,5%,200V	59660	855-535U2J101J
A14A3C36	283-0280-00			CAP,FXD,CER DI:2200PF,10%,2000V	60705	564CBA202EH222
A14A3C38	283-0279-00			CAP,FXD,CER DI:0.001UF,20%,3000V	51406	DHR12Y5S102M3KV
A14A3C39	290-0891-00			CAP,FXD,ELCTLT:1UF,+75 -10%,50V	55680	ULA1H010TEA
A14A3C42	283-0079-00			CAP,FXD,CER DI:0.01UF,20%,250V	04222	SR503C103MAA
A14A3C43	290-0767-00			CAP,FXD,ELCTLT:4.7UF,+75-10%,160VDC	54473	ECEA2CS4R7
A14A3CR15	152-0750-00			SEMICOND DVC,DI:RECT BRDG,600V,3A,FAST RCVY	05828	RKBPC606-12
A14A3CR32	152-0107-00			SEMICOND DVC,DI:RECT,SI,400 V,400MA,A1	12969	"G727"
A14A3CR33	152-0400-00			SEMICOND DVC,DI:RECT,SI,400V,1A	04713	SR1977K
A14A3CR34	152-0400-00			SEMICOND DVC,DI:RECT,SI,400V,1A	04713	SR1977K
A14A3CR36	152-0061-00			SEMICOND DVC,DI:SM,SI,175V,0.1A,DO-35	07263	FDH2161
A14A3CR37	152-0061-00			SEMICOND DVC,DI:SM,SI,175V,0.1A,DO-35	07263	FDH2161
A14A3CR38	152-0107-00			SEMICOND DVC,DI:RECT,SI,400 V,400MA,A1	12969	"G727"
A14A3CR39	152-0400-00			SEMICOND DVC,DI:RECT,SI,400V,1A	04713	SR1977K
A14A3CR40	152-0107-00			SEMICOND DVC,DI:RECT,SI,400 V,400MA,A1	12969	"G727"
A14A3CR41	152-0400-00			SEMICOND DVC,DI:RECT,SI,400V,1A	04713	SR1977K
A14A3CR45	152-0061-00			SEMICOND DVC,DI:SM,SI,175V,0.1A,DO-35	07263	FDH2161
A14A3CR46	152-0581-00			SEMICOND DVC,DI:RECT,SI,20V,1A,A59	04713	1N5817
A14A3CR49	152-0107-00			SEMICOND DVC,DI:RECT,SI,400 V,400MA,A1	12969	"G727"
A14A3DS19	150-0035-00			LAMP,GLOW:90V MAX,0.3MA,AID-T,WIRE LD	TK0213	JH005/3011JA
A14A3E8	119-0181-00			ARSR,ELEC SURGE:230,GAS FILLED	25088	B1-A230
A14A3E13	119-0181-00			ARSR,ELEC SURGE:230,GAS FILLED	25088	B1-A230
A14A3L24	108-0681-00			COIL,RF:FIXED,140UH	80009	108-0681-00
A14A3Q30	151-0508-00			TRANSISTOR:UJT,SI,TO-98	03508	X13T520
A14A3Q34	151-0632-00			TRANSISTOR:NPN,SILICON,TO-220	04713	SJE1946
A14A3Q40	151-0632-00			TRANSISTOR:NPN,SILICON,TO-220	04713	SJE1946
A14A3Q43	151-0347-00			TRANSISTOR:NPN,SI,TO-92	04713	SPS7951
A14A3Q45	151-0350-00			TRANSISTOR:PNP,SI,TO-92	04713	SPS6700
A14A3Q46	151-0260-00			TRANSISTOR:NPN,SI,TO-39	04713	ST1083
A14A3R9	304-0473-00			RES,FXD,CMPSN:47K OHM,10%,1W	01121	GB4731
A14A3R10	303-0184-00			RES,FXD,CMPSN:180K OHM,5%,1W	01121	GB1845
A14A3R13	304-0473-00			RES,FXD,CMPSN:47K OHM,10%,1W	01121	GB4731
A14A3R19	302-0565-00			RES,FXD,CMPSN:5.6W OHM,10%,0.5W	01121	EB5651
A14A3R21	304-0154-00			RES,FXD,CMPSN:150K OHM,10%,1W	01121	GB 1541
A14A3R25	315-0471-00			RES,FXD,FILM:470 OHM,5%,0.25W	57668	NTR25J-E470E
A14A3R31	303-0100-00			RES,FXD,CMPSN:10 OHM,5%,1W	01121	GB1005
A14A3R32	315-0220-00			RES,FXD,FILM:22 OHM,5%,0.25W	19701	5043CX22R00J
A14A3R36	315-0103-00			RES,FXD,FILM:10K OHM,5%,0.25W	19701	5043CX10K00J
A14A3R37	301-0200-00			RES,FXD,FILM:20 OHM,5%,0.5W	19701	5053CX20R00J
A14A3R38	315-0332-00			RES,FXD,FILM:3.3K OHM,5%,0.25W	57668	NTR25J-E03K3
A14A3R39	301-0200-00			RES,FXD,FILM:20 OHM,5%,0.5W	19701	5053CX20R00J
A14A3R40	315-0220-00			RES,FXD,FILM:22 OHM,5%,0.25W	19701	5043CX22R00J
A14A3R41	315-0753-00			RES,FXD,FILM:75K OHM,5%,0.25W	57668	NTR25J-E75K0
A14A3R42	315-0303-00			RES,FXD,FILM:30K OHM,5%,0.25W	19701	5043CX30K00J
A14A3R43	315-0274-00			RES,FXD,FILM:270K OHM,5%,0.25W	57668	NTR25J-E270K
A14A3R44	315-0270-00			RES,FXD,FILM:27 OHM,5%,0.25W	19701	5043CX27R00J
A14A3R45	315-0182-00			RES,FXD,FILM:1.8K OHM,5%,0.25W	57668	NTR25J-E1K8
A14A3R46	315-0123-00			RES,FXD,FILM:12K OHM,5%,0.25W	57668	NTR25J-E12K0
A14A3R47	301-0184-00			RES,FXD,FILM:180K OHM,5%,0.5W	57668	TR50J-E180K
A14A3RT9	307-0353-00			RES,THERMAL:5 OHM,10%	80009	307-0353-00

http://manoman.sqhill.com

Component No.	Tektronix Part No.	Serial/Assembly No. Effective	Dscont	Name & Description	Mfr. Code	Mfr. Part No.
A14A3RT13	307-0353-00			RES,THERMAL:5 OHM,10%	80009	307-0353-00
A14A3S12	260-1300-00			SWITCH,SLIDE:DPDT,3A,125VAC	82389	46206LFE
A14A3T8	120-0636-00			XFMR,PWR,STPDN:LINE TRIGGER	80009	120-0636-00
A14A3T25	120-0743-00			XFMR,TOROID:	80009	120-0743-00
A14A3T30	120-0744-00			XFMR,TOROID:5 WINDINGS	80009	120-0744-00
A14A3T35	120-0747-00			XFMR,TOROID:	80009	120-0747-00
A14A3VR38	152-0241-00			SEMICOND DVC,DI:ZEN,SI,33V,5%,0.4W,DO-7	14552	1N973B
A14A3VR45	152-0428-00			SEMICOND DVC,DI:ZEN,SI,120V,5%,0.4W,DO-7	04713	SZ13202 (1N987B)
A14A3W5	131-0566-00			BUS,COND:DUMMY RES,0.094 OD X 0.225L	24546	OMA 07

http://manoman.sqhill.com

Component No.	Tektronix Part No.	Serial/Assembly No. Effective	Dscont	Name & Description	Mfr. Code	Mfr. Part No.
A17	670-9175-00			CIRCUIT BD ASSY:INTENSITY CONTROL	80009	670-9175-00
A17R1101	311-2324-00			RES,VAR,NONWW:PNL,5K OHM/50K OHM,10%, 0.25 W	12697	CM45214
A17R1201	311-2323-00			RES,VAR,NONWW:5K OHM,10%,0.25W,W/PUSH MOM SW	12697	CM45215
A17R1301	315-0472-00			RES,FXD,FILM:4.7K OHM,5%,0.25W	57668	NTR25J-E04K7
A17R1302	315-0472-00			RES,FXD,FILM:4.7K OHM,5%,0.25W	57668	NTR25J-E04K7
A17R1303	311-2325-00			RES,VAR,NONWW:10K OHM,10%,0.25W	12697	CM45213
A17R1401	311-1339-00			RES,VAR,NONWW:TRMR,5K OHM,0.5W	02111	43P502T672
A17R1402	311-2326-00			RES,VAR,NONWW:10K OHM,10%,0.25W	12697	CM45212
A17S1201	----- -----			(PART OF A17R1201)		
A17S1303	----- -----			(PART OF A17R1303)		

http://manoman.sqhill.com

Component No.	Tektronix Part No.	Serial/Assembly No. Effective	Dscont	Name & Description	Mfr. Code	Mfr. Part No.
A18	119-0757-00			DELAY LINE,ELEC:65NS,100 OHMS	80009	119-0757-00

http://manoman.sqhill.com

Component No.	Tektronix Part No.	Serial/Assembly No. Effective	Dscont	Name & Description	Mfr. Code	Mfr. Part No.
A19	672-1176-00			CIRCUIT BD ASSY:VERT AMPL W/FLEX CONN	80009	672-1176-00

http://manoman.sqhill.com

Component No.	Tektronix Part No.	Serial/Assembly No. Effective	Dscont	Name & Description	Mfr. Code	Mfr. Part No.
A19A1	----- -----			CIRCUIT BD ASSY:VERT AMP (NOT AVAILABLE,ORDER A19)		
A19A1C100	281-0775-00			CAP,FXD,CER DI:0.1UF,20%,50V	04222	MA205E104MAA
A19A1C120	285-0683-00			CAP,FXD,PLASTIC:0.022UF,5%,100V	19396	223J01PT485
A19A1C130	285-0686-00			CAP,FXD,PLASTIC:0.068UF,10%,100V	19396	683K01PT605
A19A1C145	283-0178-00			CAP,FXD,CER DI:0.1UF,+80-20%,100V	05397	C330C104Z1U1CA
A19A1C200	281-0158-00			CAP,VAR,CER DI:7-45PF,25V	59660	518-006 G 7-45
A19A1C201	281-0775-00			CAP,FXD,CER DI:0.1UF,20%,50V	04222	MA205E104MAA
A19A1C202	283-0315-00			CAP,FXD,CER DI:470PF,10%,100V	04222	10051A471KA2065
A19A1C203	283-0314-00			CAP,FXD,CER DI:100PF,10%,100V	04222	08051A101KA2075
A19A1C204	283-0407-00			CAP,FXD,CER DI:27PF,5%,50V	04222	ULA105A270J8
A19A1C215	281-0151-00			CAP,VAR,CER DI:1-3PF,100V	59660	518 000 A 1.0 3
A19A1C220	283-0315-00			CAP,FXD,CER DI:470PF,10%,100V	04222	10051A471KA2065
A19A1C221	283-0314-00			CAP,FXD,CER DI:100PF,10%,100V	04222	08051A101KA2075
A19A1C223	283-0407-00			CAP,FXD,CER DI:27PF,5%,50V	04222	ULA105A270J8
A19A1C240	290-0776-00			CAP,FXD,ELCTLT:22UF,+50-10 %,10V	55680	ULA1A220TEA
A19A1C241	285-0643-00			CAP,FXD,PLASTIC:0.0047UF,5%,100V	56289	192P47252R468
A19A1C245	290-0745-00			CAP,FXD,ELCTLT:22UF,+50-10%,25V	54473	ECE-A25V22L
A19A1C246	290-0745-00			CAP,FXD,ELCTLT:22UF,+50-10%,25V	54473	ECE-A25V22L
A19A1C333	283-0649-00			CAP,FXD,MICA DI:105PF,1%,300V	00853	D155F1050F0
A19A1C334	281-0810-00			CAP,FXD,CER DI:5.6PF,+/-0.5PF,100V	04222	MA101A5R6DAA
A19A1C340	283-0666-00			CAP,FXD,MICA DI:890PF,2%,100V	00853	D151F891G0
A19A1C341	281-0775-00			CAP,FXD,CER DI:0.1UF,20%,50V	04222	MA205E104MAA
A19A1C400	283-0256-00			CAP,FXD,CER DI:130PF,5%,100V	51642	200100N1500131J
A19A1C401	281-0158-00			CAP,VAR,CER DI:7-45PF,25V	59660	518-006 G 7-45
A19A1C530	281-0775-00			CAP,FXD,CER DI:0.1UF,20%,50V	04222	MA205E104MAA
A19A1C605	290-0782-00			CAP,FXD,ELCTLT:4.7UF,+75-10%,35VDC	55680	ULA1V4R7TEA
A19A1C630	281-0771-00			CAP,FXD,CER DI:2200PF,220%,200V	04222	MA106E222MAA
A19A1C640	281-0814-00			CAP,FXD,CER DI:100 PF,10%,100V	04222	MA101A101KAA
A19A1C700	281-0775-00			CAP,FXD,CER DI:0.1UF,20%,50V	04222	MA205E104MAA
A19A1C712	281-0773-00			CAP,FXD,CER DI:0.01UF,10%,100V	04222	MA201C103KAA
A19A1C742	281-0812-00			CAP,FXD,CER DI:1000PF,10%,100V	04222	MA101C102KAA
A19A1CR333	152-0322-00			SEMICOND DVC,DI:SCHOTTKY BARRIER,SI,15V	50434	5082-2672
A19A1CR334	152-0322-00			SEMICOND DVC,DI:SCHOTTKY BARRIER,SI,15V	50434	5082-2672
A19A1CR544	152-0141-02			SEMICOND DVC,DI:SW,SI,30V,150MA,30V,DO-35	03508	DA2527 (1N4152)
A19A1CR641	152-0141-02			SEMICOND DVC,DI:SW,SI,30V,150MA,30V,DO-35	03508	DA2527 (1N4152)
A19A1L100	114-0220-00			COIL,RF:VARIABLE,1-3UH	80009	114-0220-00
A19A1L135	108-0538-00			COIL,RF:FIXED,2.7UH	76493	JWM#B7059
A19A1L140	108-0538-00			COIL,RF:FIXED,2.7UH	76493	JWM#B7059
A19A1L141	108-0538-00			COIL,RF:FIXED,2.7UH	76493	JWM#B7059
A19A1L200	108-0733-00			COIL,RF:FIXED,113NH	80009	108-0733-00
A19A1L201	108-0311-00			COIL,RF:FIXED,153NH	80009	108-0311-00
A19A1L220	108-0733-00			COIL,RF:FIXED,113NH	80009	108-0733-00
A19A1L221	108-0311-00			COIL,RF:FIXED,153NH	80009	108-0311-00
A19A1LR530	108-0543-00			COIL,RF:FIXED,1.1UH	80009	108-0543-00
A19A1Q303	151-0302-00			TRANSISTOR:NPN,SI,TO-18	04713	ST899
A19A1Q400	151-0302-00			TRANSISTOR:NPN,SI,TO-18	04713	ST899
A19A1Q430	151-0192-00			TRANSISTOR:SELECTED	04713	SPS8801
A19A1Q431	151-0192-00			TRANSISTOR:SELECTED	04713	SPS8801
A19A1Q435	151-0216-00			TRANSISTOR:PNP,SI,TO-92	04713	SPS8803
A19A1Q530	151-0216-00			TRANSISTOR:PNP,SI,TO-92	04713	SPS8803
A19A1Q540	151-0301-00			TRANSISTOR:PNP,SI,TO-18	04713	ST898
A19A1Q541	151-0302-00			TRANSISTOR:NPN,SI,TO-18	04713	ST899
A19A1Q630	151-0221-00			TRANSISTOR:PNP,SI,TO-92	80009	151-0221-00
A19A1Q631	151-0367-00			TRANSISTOR:NPN,SI,X-55	04713	SPS 8811
A19A1Q720	151-0390-00			TRANSISTOR:NPN,SI,X-81	04713	SPS34140RMPSU45
A19A1Q722	151-0126-00			TRANSISTOR:NPN,SI,TO-18	04713	ST1046
A19A1Q740	151-1021-00			TRANSISTOR:FET,N-CHAN,SI,TO-18	80009	151-1021-00
A19A1R130	311-1230-00			RES,VAR,NONWW:TRMR,20K OHM,0.5W	32997	3386F-T04-203

http://manoman.sqhill.com

Component No.	Tektronix Part No.	Serial/Assembly No. Effective	Dscont	Name & Description	Mfr. Code	Mfr. Part No.
A19A1R131	311-1214-00			RES,VAR,NONWW:TRMR,200K OHM,0.5W	32997	3386F-T04-204
A19A1R132	311-1214-00			RES,VAR,NONWW:TRMR,200K OHM,0.5W	32997	3386F-T04-204
A19A1R201	315-0101-00			RES,FXD,FILM:100 OHM,5%,0.25W	57668	NTR25J-E 100E
A19A1R205	322-0133-00			RES,FXD,FILM:237 OHM,1%,0.25W,TC=T0	75042	CEBT0-2370F
A19A1R206	321-0331-00			RES,FXD,FILM:27.4K OHM,1%,0.125W,TC=T0	19701	5043ED27K40F
A19A1R207	321-0171-00			RES,FXD,FILM:590 OHM,1%,0.125W,TC=T0	19701	5033ED590R0F
A19A1R208	317-0047-00			RES,FXD,CMPSN:4.7 OHM,5%,0.125W	01121	BB47G5
A19A1R209	317-0100-00			RES,FXD,CMPSN:10 OHM,5%,0.125W	01121	BB1005
A19A1R210	317-0150-00			RES,FXD,CMPSN:15 OHM,5%,0.125W	01121	BB1505
A19A1R211	311-1757-00			RES,VAR,NONWW:2.5K OHM 10%,.5W LIN,CERMET	73138	82PR2.5K-124B
A19A1R212	321-0172-00			RES,FXD,FILM:604 OHM,1%,0.125W,TC=T0	19701	5033ED604R0F
A19A1R213	321-0179-00			RES,FXD,FILM:715 OHM,1%,0.125W,TC=T0	07716	CEAD715R0F
A19A1R214	315-0181-00			RES,FXD,FILM:180 OHM,5%,0.25W	57668	NTR25J-E180E
A19A1R215	311-0978-00			RES,VAR,NONWW:TRMR,250 OHM,0.5W	73138	82-4-2
A19A1R220	321-0171-00			RES,FXD,FILM:590 OHM,1%,0.125W,TC=T0	19701	5033ED590R0F
A19A1R221	317-0047-00			RES,FXD,CMPSN:4.7 OHM,5%,0.125W	01121	BB47G5
A19A1R222	317-0100-00			RES,FXD,CMPSN:10 OHM,5%,0.125W	01121	BB1005
A19A1R223	317-0150-00			RES,FXD,CMPSN:15 OHM,5%,0.125W	01121	BB1505
A19A1R230	321-0365-00			RES,FXD,FILM:61.9K OHM,1%,0.125W,TC=T0	07716	CEAD61901F
A19A1R231	321-0361-00			RES,FXD,FILM:56.2K OHM,1%,0.125W,TC=T0	07716	CEAD56201F
A19A1R232	321-0402-00			RES,FXD,FILM:150K OHM,1%,0.125W,TC=T0	19701	5033ED150K0F
A19A1R233	321-0435-00			RES,FXD,FILM:332K OHM,1%,0.125W,TC=T0	07716	CEAD33202F
A19A1R234	321-0357-00			RES,FXD,FILM:51.1K OHM,1%,0.125W,TC=T0	07716	CEAD51101F
A19A1R235	321-0357-00			RES,FXD,FILM:51.1K OHM,1%,0.125W,TC=T0	07716	CEAD51101F
A19A1R236	321-0357-00			RES,FXD,FILM:51.1K OHM,1%,0.125W,TC=T0	07716	CEAD51101F
A19A1R237	311-1214-00			RES,VAR,NONWW:TRMR,200K OHM,0.5W	32997	3386F-T04-204
A19A1R238	311-1214-00			RES,VAR,NONWW:TRMR,200K OHM,0.5W	32997	3386F-T04-204
A19A1R300	322-0133-00			RES,FXD,FILM:237 OHM,1%,0.25W,TC=T0	75042	CEBT0-2370F
A19A1R304	317-0100-00			RES,FXD,CMPSN:10 OHM,5%,0.125W	01121	BB1005
A19A1R310	321-0164-00			RES,FXD,FILM:499 OHM,1%,0.125W,TC=T0	19701	5033ED499R0F
A19A1R311	321-0239-00			RES,FXD,FILM:3.01K OHM,1%,0.125W,TC=T0	19701	5043ED3K010F
A19A1R312	323-0115-00			RES,FXD,FILM:154 OHM,1%,0.5W,TC=T0	91637	MFF1226G154R0F
A19A1R320	321-0164-00			RES,FXD,FILM:499 OHM,1%,0.125W,TC=T0	19701	5033ED499R0F
A19A1R321	321-0193-00			RES,FXD,FILM:1K OHM,1%,0.125W,TC=T0	19701	5033ED1K00F
A19A1R330	321-0354-00			RES,FXD,FILM:47.5K OHM,1%,0.125W,TC=T0	19701	5043ED47K50F
A19A1R331	321-0342-00			RES,FXD,FILM:35.7K OHM,1%,0.125W,TC=T0	07716	CEAD35701F
A19A1R332	321-0357-00			RES,FXD,FILM:51.1K OHM,1%,0.125W,TC=T0	07716	CEAD51101F
A19A1R333	321-0339-00			RES,FXD,FILM:33.2K OHM,1%,0.125W,TC=T0	07716	CEAD33201F
A19A1R334	321-0239-00			RES,FXD,FILM:3.01K OHM,1%,0.125W,TC=T0	19701	5043ED3K010F
A19A1R335	311-1214-00			RES,VAR,NONWW:TRMR,200K OHM,0.5W	32997	3386F-T04-204
A19A1R336	321-0193-00			RES,FXD,FILM:1K OHM,1%,0.125W,TC=T0	19701	5033ED1K00F
A19A1R400	321-0123-00			RES,FXD,FILM:187 OHM,1%,0.125W, TC=T0	07716	CEAD187R0F
A19A1R404	311-1266-00			RES,VAR,NONWW:TRMR,2.5K OHM,0.5W	32997	3329P-L58-252
A19A1R405	311-0978-00			RES,VAR,NONWW:TRMR,250 OHM,0.5W	73138	82-4-2
A19A1R406	317-0100-00			RES,FXD,CMPSN:10 OHM,5%,0.125W	01121	BB1005
A19A1R407	317-0100-00			RES,FXD,CMPSN:10 OHM,5%,0.125W	01121	BB1005
A19A1R408	317-0100-00			RES,FXD,CMPSN:10 OHM,5%,0.125W	01121	BB1005
A19A1R430	321-0233-00			RES,FXD,FILM:2.61K OHM,1%,0.125W,TC=T0	07716	CEAD26100F
A19A1R431	323-0141-00			RES,FXD,FILM:287 OHM,1%,0.5W,TC=T0	24546	NA65D 2870F
A19A1R432	321-0189-00			RES,FXD,FILM:909 OHM,1%,0.125W,TC=T2	19701	5033ED909R0F
A19A1R433	321-0208-00			RES,FXD,FILM:1.43K OHM,1%,0.125W,TC=T0	19701	5033ED1K43F
A19A1R434	321-0208-00			RES,FXD,FILM:1.43K OHM,1%,0.125W,TC=T0	19701	5033ED1K43F
A19A1R435	321-0184-00			RES,FXD,FILM:806 OHM,1%,0.125W,TC=T0	19701	5033ED806R0F
A19A1R437	321-0233-00			RES,FXD,FILM:2.61K OHM,1%,0.125W,TC=T0	07716	CEAD26100F
A19A1R438	321-0172-00			RES,FXD,FILM:604 OHM,1%,0.125W,TC=T0	19701	5033ED604R0F
A19A1R439	321-0114-00			RES,FXD,FILM:150 OHM,1%,0.125 W,TC=T0	19701	5033ED150R0F
A19A1R500	322-0147-00			RES,FXD,FILM:332 OHM,1%,0.25W,TC=T0	24546	NA60D3320F
A19A1R501	322-0147-00			RES,FXD,FILM:332 OHM,1%,0.25W,TC=T0	24546	NA60D3320F
A19A1R502	315-0122-00			RES,FXD,FILM:1.2K OHM,5%,0.25W	57668	NTR25J-E01K2

http://manoman.sqhill.com

Component No.	Tektronix Part No.	Serial/Assembly No. Effective	Dscont	Name & Description	Mfr. Code	Mfr. Part No.
A19A1R530	321-0210-00			RES,FXD,FILM:1.50K OHM,1%,0.125W,TC=T0	19701	5033ED1K50F
A19A1R531	321-0140-00			RES,FXD,FILM:280 OHM,1%,0.125W,TC=T0	07716	CEAD280R0F
A19A1R532	322-0216-00			RES,FXD,FILM:1.74K OHM,1%,0.25W,TC=T0	75042	CEBT0-1741F
A19A1R533	322-0201-00			RES,FXD,FILM:1.21K OHM,1%,0.25W,TC=T0	19701	5043RD1K210F
A19A1R534	321-0309-00			RES,FXD,FILM:16.2K OHM,1%,0.125W,TC=T0	19701	5033ED16K20F
A19A1R535	321-0161-00			RES,FXD,FILM:464 OHM,1%,0.125W,TC=T0	07716	CEAD464R0F
A19A1R537	321-0100-00			RES,FXD,FILM:107 OHM,1%,0.125W,TC=T0	07716	CEAD107R0F
A19A1R541	315-0623-00			RES,FXD,FILM:62K OHM,5%,0.25W	19701	5043CX62K00J
A19A1R543	315-0471-00			RES,FXD,FILM:470 OHM,5%,0.25W	57668	NTR25J-E470E
A19A1R544	315-0432-00			RES,FXD,FILM:4.3K OHM,5%,0.25W	57668	NTR25J-E04K3
A19A1R600	321-0044-00			RES,FXD,FILM:28.0 OHM,1%,0.125W,TC=T0	91637	CMF55116G28R00F
A19A1R601	321-0044-00			RES,FXD,FILM:28.0 OHM,1%,0.125W,TC=T0	91637	CMF55116G28R00F
A19A1R602	321-0299-00			RES,FXD,FILM:12.7K OHM,1%,0.125W,TC=T0	19701	5033ED12K70F
A19A1R603	321-0306-00			RES,FXD,FILM:15.0K OHM,1%,0.125W,TC=T0	19701	5033ED15J00F
A19A1R604	321-0306-00			RES,FXD,FILM:15.0K OHM,1%,0.125W,TC=T0	19701	5033ED15J00F
A19A1R605	321-0306-00			RES,FXD,FILM:15.0K OHM,1%,0.125W,TC=T0	19701	5033ED15J00F
A19A1R630	321-0365-00			RES,FXD,FILM:61.9K OHM,1%,0.125W,TC=T0	07716	CEAD61901F
A19A1R631	321-0160-00			RES,FXD,FILM:453 OHM,1%,0.125W,TC=T0	19701	5033ED453R0F
A19A1R632	321-0193-00			RES,FXD,FILM:1K OHM,1%,0.125W,TC=T0	19701	5033ED1K00F
A19A1R633	321-0347-00			RES,FXD,FILM:40.2K OHM,1%,0.125W,TC=T0	91637	CMF55116G40201F
A19A1R634	321-0318-00			RES,FXD,FILM:20.0K OHM,1%,0.125W,TC=T0	19701	5033ED20K00F
A19A1R640	315-0302-00			RES,FXD,FILM:3K OHM,5%,0.25W	57668	NTR25J-E03K0
A19A1R641	315-0102-00			RES,FXD,FILM:1K OHM,5%,0.25W	57668	NTR25JE01K0
A19A1R642	315-0153-00			RES,FXD,FILM:15K OHM,5%,0.25W	19701	5043CX15K00J
A19A1R643	321-0068-00			RES,FXD,FILM:49.9 OHM,0.5%,0.125W,TC=T0	91637	CMF55116G49R90F
A19A1R700	315-0752-00			RES,FXD,FILM:7.5K OHM,5%,0.25W	57668	NTR25J-E07K5
A19A1R701	315-0122-00			RES,FXD,FILM:1.2K OHM,5%,0.25W	57668	NTR25J-E01K2
A19A1R702	321-0297-00			RES,FXD,FILM:12.1K OHM,1%,0.125W,TC=T0	07716	CEAD12101F
A19A1R703	321-0320-00			RES,FXD,FILM:21.0K OHM,1%,0.125W,TC=T0	19701	5033ED21K00F
A19A1R710	323-0082-00			RES,FXD,FILM:69.8 OHM,1%,0.5W,TC=T0	24546	NA65D69R8F
A19A1R711	323-0082-00			RES,FXD,FILM:69.8 OHM,1%,0.5W,TC=T0	24546	NA65D69R8F
A19A1R712	323-0119-00			RES,FXD,FILM:169 OHM,1%,0.5W,TC=T0	75042	CECT0-169OF
A19A1R731	321-0289-00			RES,FXD,FILM:10.0K OHM,1%,0.125W,TC=T0	19701	5033ED10K0F
A19A1R732	321-0324-00			RES,FXD,FILM:23.2K OHM,1%,0.125W,TC=T0	07716	CEAD23201F
A19A1R733	315-0472-00			RES,FXD,FILM:4.7K OHM,5%,0.25W	57668	NTR25J-E04K7
A19A1R734	315-0362-00			RES,FXD,FILM:3.6K OHM,5%,0.25W	19701	5043CX3K600J
A19A1R735	315-0362-00			RES,FXD,FILM:3.6K OHM,5%,0.25W	19701	5043CX3K600J
A19A1R736	311-1232-00			RES,VAR,NONWW:TRMR,50K OHM,0.5W	32997	3386F-T04-503
A19A1R737	311-1232-00			RES,VAR,NONWW:TRMR,50K OHM,0.5W	32997	3386F-T04-503
A19A1R740	315-0203-00			RES,FXD,FILM:20K OHM,5%,0.25W	57668	NTR25J-E 20K
A19A1R741	315-0204-00			RES,FXD,FILM:200K OHM,5%,0.25W	19701	5043CX200K0J
A19A1R742	315-0104-00			RES,FXD,FILM:100K OHM,5%,0.25W	57668	NTR25J-E100K
A19A1R744	315-0224-00			RES,FXD,FILM:220K OHM,5%,0.25W	57668	NTR25J-E220K
A19A1R745	315-0102-00			RES,FXD,FILM:1K OHM,5%,0.25W	57668	NTR25JE01K0
A19A1RT303	307-0364-00			RES,THERMAL:50 OHM,5%,0.125W	01295	T8 1/8 500J
A19A1TP300	214-0579-00			TERM,TEST POINT:BRS CD PL	80009	214-0579-00
A19A1TP500	214-0579-00			TERM,TEST POINT:BRS CD PL	80009	214-0579-00
A19A1TP502	214-0579-00			TERM,TEST POINT:BRS CD PL	80009	214-0579-00
A19A1TP630	214-0579-00			TERM,TEST POINT:BRS CD PL	80009	214-0579-00
A19A1TP700	214-0579-00			TERM,TEST POINT:BRS CD PL	80009	214-0579-00
A19A1TP720	214-0579-00			TERM,TEST POINT:BRS CD PL	80009	214-0579-00
A19A1TP721	214-0579-00			TERM,TEST POINT:BRS CD PL	80009	214-0579-00
A19A1U100	156-1149-00			MICROCKT,LINEAR:OPERATIONAL AMP,JFET INPUT	27014	LF351N/GLEA134
A19A1U335	156-1149-00			MICROCKT,LINEAR:OPERATIONAL AMP,JFET INPUT	27014	LF351N/GLEA134
A19A1U415	155-0175-05			MICROCKT,LINEAR:AMPLIFIER,M178	80009	155-0175-05
A19A1U515	155-0178-05			MICROCKT,LINEAR:VERTICAL OUTPUT	80009	155-0178-05
A19A1U630	156-1149-00			MICROCKT,LINEAR:OPERATIONAL AMP,JFET INPUT	27014	LF351N/GLEA134
A19A1U700	156-0158-00			MICROCKT,LINEAR:DUAL OPNL AMPL	04713	MC1458P1/MC1458U
A19A1W402	131-0566-00			BUS,COND:DUMMY RES,0.094 OD X 0.225L	24546	OMA 07

http://manoman.sqhill.com

Component No.	Tektronix Part No.	Serial/Assembly No. Effective	Dscont	Name & Description	Mfr. Code	Mfr. Part No.
A19A1W410	131-0566-00			BUS,COND:DUMMY RES,0.094 OD X 0.225L	24546	OMA 07
A19A1W420	131-0566-00			BUS,COND:DUMMY RES,0.094 OD X 0.225L	24546	OMA 07
A19A1W421	131-0566-00			BUS,COND:DUMMY RES,0.094 OD X 0.225L	24546	OMA 07
A19A1W510	131-0566-00			BUS,COND:DUMMY RES,0.094 OD X 0.225L	24546	OMA 07
A19A1W530	131-0566-00			BUS,COND:DUMMY RES,0.094 OD X 0.225L	24546	OMA 07

http://manoman.sqhill.com

Component No.	Tektronix Part No.	Serial/Assembly No. Effective	Dscont	Name & Description	Mfr. Code	Mfr. Part No.
A19A2	670-8046-00			CIRCUIT BD ASSY:FLEX CON (NO ELECTRICAL PARTS)	80009	670-8046-00

http://manoman.sqhill.com

Component No.	Tektronix Part No.	Serial/Assembly No. Effective	Dscont	Name & Description	Mfr. Code	Mfr. Part No.
A20	670-9172-00			CIRCUIT BD ASSY:HORIZ AMP	80009	670-9172-00
A20C1	281-0158-00			CAP,VAR,CER DI:7-45PF,25V	59660	518-006 G 7-45
A20C3	281-0788-00			CAP,FXD,CER DI:470PF,10%,100V	04222	MA101C471KAA
A20C4	281-0775-00			CAP,FXD,CER DI:0.1UF,20%,50V	04222	MA205E104MAA
A20C5	281-0158-00			CAP,VAR,CER DI:7-45PF,25V	59660	518-006 G 7-45
A20C6	283-0005-02			CAP,FXD,CER DI:0.01UF,+80%-20%,250V	54583	FK26Z5U2D103Z-T
A20C7	281-0788-00			CAP,FXD,CER DI:470PF,10%,100V	04222	MA101C471KAA
A20C8	281-0812-00			CAP,FXD,CER DI:1000PF,10%,100V	04222	MA101C102KAA
A20C13	283-0185-00			CAP,FXD,CER DI:2.5PF,0.5%,50V	51642	100-050-NPO-259B
A20C14	281-0077-00			CAP,VAR,AIR DI:1.3-5.4PF,350V	74970	189-0502-075
A20C15	283-0028-00			CAP,FXD,CER DI:0.0022UF,20%,50V	59660	0805585Y5S0222M
A20C18	281-0077-00			CAP,VAR,AIR DI:1.3-5.4PF,350V	74970	189-0502-075
A20C19	283-0185-00			CAP,FXD,CER DI:2.5PF,0.5%,50V	51642	100-050-NPO-259B
A20C20	283-0028-00			CAP,FXD,CER DI:0.0022UF,20%,50V	59660	0805585Y5S0222M
A20C21	283-0005-02			CAP,FXD,CER DI:0.01UF,+80%-20%,250V	54583	FK26Z5U2D103Z-T
A20C22	283-0005-02			CAP,FXD,CER DI:0.01UF,+80%-20%,250V	54583	FK26Z5U2D103Z-T
A20C23	283-0647-00			CAP,FXD,MICA DI:70PF,1%,100V	00853	D155E700F0
A20C24	281-0187-00			CAP,VAR,PLASTIC:4-40PF,250V	80031	2810D00440QN02F0
A20C25	283-0005-02			CAP,FXD,CER DI:0.01UF,+80%-20%,250V	54583	FK26Z5U2D103Z-T
A20C26	283-0005-02			CAP,FXD,CER DI:0.01UF,+80%-20%,250V	54583	FK26Z5U2D103Z-T
A20C27	283-0005-02			CAP,FXD,CER DI:0.01UF,+80%-20%,250V	54583	FK26Z5U2D103Z-T
A20C28	281-0812-00			CAP,FXD,CER DI:1000PF,10%,100V	04222	MA101C102KAA
A20C29	283-0005-02			CAP,FXD,CER DI:0.01UF,+80%-20%,250V	54583	FK26Z5U2D103Z-T
A20C30	283-0005-02			CAP,FXD,CER DI:0.01UF,+80%-20%,250V	54583	FK26Z5U2D103Z-T
A20C31	283-0005-02			CAP,FXD,CER DI:0.01UF,+80%-20%,250V	54583	FK26Z5U2D103Z-T
A20C32	283-0005-02			CAP,FXD,CER DI:0.01UF,+80%-20%,250V	54583	FK26Z5U2D103Z-T
A20C33	283-0348-00			CAP,FXD,CER DI:0.5PF,+/-0.1PF,100V	51642	M150100NP0508B
A20C34	283-0167-02			CAP,FXD,CER DI:0.1UF,10%,100V,0.2 SPACING	54583	FK26X5R2A104K-T
A20C35	290-0920-00			CAP,FXD,ELCTLT:33UF,+50-10%,35V	55680	ULB1V330TEAANA
A20C36	290-0920-00			CAP,FXD,ELCTLT:33UF,+50-10%,35V	55680	ULB1V330TEAANA
A20C37	290-0920-00			CAP,FXD,ELCTLT:33UF,+50-10%,35V	55680	ULB1V330TEAANA
A20C38	281-0812-00			CAP,FXD,CER DI:1000PF,10%,100V	04222	MA101C102KAA
A20C40	281-0792-00			CAP,FXD,CER DI:82PF,10%,100V	04222	MA101A820KAA
A20C41	283-0348-00			CAP,FXD,CER DI:0.5PF,+/-0.1PF,100V	51642	M150100NP0508B
A20C42	283-0005-02			CAP,FXD,CER DI:0.01UF,+80%-20%,250V	54583	FK26Z5U2D103Z-T
A20C44	283-0203-00			CAP,FXD,CER DI:0.47UF,20%,50V	04222	SR305SC474MAA
A20C45	283-0167-02			CAP,FXD,CER DI:0.1UF,10%,100V,0.2 SPACING	54583	FK26X5R2A104K-T
A20C46	283-0175-00			CAP,FXD,CER DI:10PF,5%,200V	05397	C312C100D2G5CA 8
A20C60	283-0005-02			CAP,FXD,CER DI:0.01UF,+80%-20%,250V	54583	FK26Z5U2D103Z-T
A20C62	283-0260-00			CAP,FXD,CER DI:5.6PF,+/-0.25PF,200V	51642	150 200NP0569C
A20C63	281-0773-00			CAP,FXD,CER DI:0.01UF,10%,100V	04222	MA201C103KAA
A20C85	281-0811-00			CAP,FXD,CER DI:10PF,10%,100V	04222	MA101A100KAA
A20C91	281-0812-00			CAP,FXD,CER DI:1000PF,10%,100V	04222	MA101C102KAA
A20C200	283-0260-00			CAP,FXD,CER DI:5.6PF,+/-0.25PF,200V	51642	150 200NP0569C
A20C220	283-0348-00			CAP,FXD,CER DI:0.5PF,+/-0.1PF,100V	51642	M150100NP0508B
A20C230	283-0154-00			CAP,FXD,CER DI:22PF,5%,50V	04222	SR155A220JAA
A20CR1	152-0322-00			SEMICOND DVC,DI:SCHOTTKY BARRIER,SI,15V	50434	5082-2672
A20CR2	152-0322-00			SEMICOND DVC,DI:SCHOTTKY BARRIER,SI,15V	50434	5082-2672
A20CR3	152-0141-02			SEMICOND DVC,DI:SM,SI,30V,150MA,30V,DO-35	03508	DA2527 (1N4152)
A20CR4	152-0322-00			SEMICOND DVC,DI:SCHOTTKY BARRIER,SI,15V	50434	5082-2672
A20CR5	152-0322-00			SEMICOND DVC,DI:SCHOTTKY BARRIER,SI,15V	50434	5082-2672
A20CR6	152-0141-02			SEMICOND DVC,DI:SM,SI,30V,150MA,30V,DO-35	03508	DA2527 (1N4152)
A20CR7	152-0141-02			SEMICOND DVC,DI:SM,SI,30V,150MA,30V,DO-35	03508	DA2527 (1N4152)
A20CR8	152-0141-02			SEMICOND DVC,DI:SM,SI,30V,150MA,30V,DO-35	03508	DA2527 (1N4152)
A20CR9	152-0141-02			SEMICOND DVC,DI:SM,SI,30V,150MA,30V,DO-35	03508	DA2527 (1N4152)
A20CR10	152-0141-02			SEMICOND DVC,DI:SM,SI,30V,150MA,30V,DO-35	03508	DA2527 (1N4152)
A20CR11	152-0141-02			SEMICOND DVC,DI:SM,SI,30V,150MA,30V,DO-35	03508	DA2527 (1N4152)
A20CR12	152-0141-02			SEMICOND DVC,DI:SM,SI,30V,150MA,30V,DO-35	03508	DA2527 (1N4152)
A20CR14	152-0141-02			SEMICOND DVC,DI:SM,SI,30V,150MA,30V,DO-35	03508	DA2527 (1N4152)

http://manoman.sqhill.com

Component No.	Tektronix Part No.	Serial/Assembly No. Effective	Dscont	Name & Description	Mfr. Code	Mfr. Part No.
A20L1	108-0578-00			COIL,RF:FIXED,45NH	80009	108-0578-00
A20L2	108-0578-00			COIL,RF:FIXED,45NH	80009	108-0578-00
A20L4	108-1246-00			COIL,RF:FXD,3.9UH,10%	54583	SPT 0406-3R9K-6
A20L5	108-1246-00			COIL,RF:FXD,3.9UH,10%	54583	SPT 0406-3R9K-6
A20L6	108-1246-00			COIL,RF:FXD,3.9UH,10%	54583	SPT 0406-3R9K-6
A20Q1	151-0190-00			TRANSISTOR:NPN,SI,TO-92	80009	151-0190-00
A20Q2	151-1021-00			TRANSISTOR:FET,N-CHAN,SI,TO-18	80009	151-1021-00
A20Q3	151-0220-00			TRANSISTOR:PNP,SI,TO-92	80009	151-0220-00
A20Q4	151-0220-00			TRANSISTOR:PNP,SI,TO-92	80009	151-0220-00
A20Q5	151-0220-00			TRANSISTOR:PNP,SI,TO-92	80009	151-0220-00
A20Q6	151-0220-00			TRANSISTOR:PNP,SI,TO-92	80009	151-0220-00
A20Q7	151-0220-00			TRANSISTOR:PNP,SI,TO-92	80009	151-0220-00
A20Q8	151-0220-00			TRANSISTOR:PNP,SI,TO-92	80009	151-0220-00
A20Q9	151-0220-00			TRANSISTOR:PNP,SI,TO-92	80009	151-0220-00
A20Q10	151-0220-00			TRANSISTOR:PNP,SI,TO-92	80009	151-0220-00
A20Q11	151-0441-00			TRANSISTOR:NPN,SI,TO-72	04713	SRF501
A20Q12	151-0712-00			TRANSISTOR:PNP,SI,TO-92	04713	SPS8223
A20Q13	151-0438-00			TRANSISTOR:PNP,SI,AMPLIFIER,625 MA	80009	151-0438-00
A20Q14	151-0441-00			TRANSISTOR:NPN,SI,TO-72	04713	SRF501
A20Q15	151-0220-00			TRANSISTOR:PNP,SI,TO-92	80009	151-0220-00
A20Q16	151-0333-00			TRANSISTOR:SELECTED	04713	SPS1752
A20Q17	151-0333-00			TRANSISTOR:SELECTED	04713	SPS1752
A20Q18	151-0220-00			TRANSISTOR:PNP,SI,TO-92	80009	151-0220-00
A20Q19	151-0410-00			TRANSISTOR:PNP,SI,TO-92	04713	SPS6765
A20Q20	151-0220-00			TRANSISTOR:PNP,SI,TO-92	80009	151-0220-00
A20Q21	151-0220-00			TRANSISTOR:PNP,SI,TO-92	80009	151-0220-00
A20Q22	151-0472-00			TRANSISTOR:NPN,SI,TO-92	51984	NE41632B
A20Q23	151-0270-03			TRANSISTOR:SCREENED	04713	ST919H
A20Q24	151-0274-01			TRANSISTOR:SCREENED	04713	SS7394H
A20Q25	151-0270-03			TRANSISTOR:SCREENED	04713	ST919H
A20Q26	151-0274-01			TRANSISTOR:SCREENED	04713	SS7394H
A20R1	315-0222-00			RES,FXD,FILM:2.2K OHM,5%,0.25W	57668	NTR25J-E02K2
A20R2	321-0181-00			RES,FXD,FILM:750 OHM,1%,0.125W,TC=TO	07716	CEAD750R0F
A20R3	315-0822-00			RES,FXD,FILM:8.2K OHM,5%,0.25W	19701	5043CX8K200J
A20R4	321-0078-00			RES,FXD,FILM:63.4 OHM,1%,0.125W,TC=TO	91637	CMF55116G63R40F
A20R5	323-0167-00			RES,FXD,FILM:536 OHM,1%,0.5W,TC=TO	07716	CECD536R0F
A20R6	315-0822-00			RES,FXD,FILM:8.2K OHM,5%,0.25W	19701	5043CX8K200J
A20R7	321-0135-00			RES,FXD,FILM:249 OHM,1%,0.125W,TC=TO	07716	CEAD249R0F
A20R8	311-2232-00			RES,VAR,NONWW:TRMR,2K OHM,20%,0.5W LINEAR	TK1450	GF06UT 2K
A20R9	321-0078-00			RES,FXD,FILM:63.4 OHM,1%,0.125W,TC=TO	91637	CMF55116G63R40F
A20R10	323-0167-00			RES,FXD,FILM:536 OHM,1%,0.5W,TC=TO	07716	CECD536R0F
A20R11	315-0822-00			RES,FXD,FILM:8.2K OHM,5%,0.25W	19701	5043CX8K200J
A20R12	315-0563-00			RES,FXD,FILM:56K OHM,5%,0.25W	19701	5043CX56K00J
A20R13	311-2235-00			RES,VAR,NONWW:TRMR,10K OHM,20%,0.5W LINEAR	TK1450	GF06UT 10 K
A20R14	321-0228-00			RES,FXD,FILM:2.32K OHM,1%,0.125W,TC=TO	19701	5043ED2K32F
A20R15	311-2228-00			RES,VAR,NONWW:TRMR,200 OHM,20%,0.5W LINEAR	TK1450	GF06UT 200 OHM
A20R16	321-0228-00			RES,FXD,FILM:2.32K OHM,1%,0.125W,TC=TO	19701	5043ED2K32F
A20R17	315-0300-00			RES,FXD,FILM:30 OHM,5%,0.25W	19701	5043CX30R00J
A20R18	315-0473-00			RES,FXD,FILM:47K OHM,5%,0.25W	57668	NTR25J-E47K0
A20R19	321-0124-00			RES,FXD,FILM:191 OHM,1%,0.125W, TC=TO	07716	CEAD191R0F
A20R20	321-0144-00			RES,FXD,FILM:309 OHM,1%,0.125W,TC=TO	07716	CEAD309R0F
A20R21	315-0300-00			RES,FXD,FILM:30 OHM,5%,0.25W	19701	5043CX30R00J
A20R22	311-2230-00			RES,VAR,NONWW:TRMR,500 OHM,20%,0.50 LINEAR	TK1450	GF06UT 500
A20R23	315-0300-00			RES,FXD,FILM:30 OHM,5%,0.25W	19701	5043CX30R00J
A20R24	321-0228-00			RES,FXD,FILM:2.32K OHM,1%,0.125W,TC=TO	19701	5043ED2K32F
A20R25	311-2228-00			RES,VAR,NONWW:TRMR,200 OHM,20%,0.5W LINEAR	TK1450	GF06UT 200 OHM
A20R26	321-0228-00			RES,FXD,FILM:2.32K OHM,1%,0.125W,TC=TO	19701	5043ED2K32F
A20R27	311-2239-00			RES,VAR,NONWW:TRMR,100K OHM,20%,0.5W LINEAR	TK1450	GF06UT 100K
A20R28	315-0103-00			RES,FXD,FILM:10K OHM,5%,0.25W	19701	5043CX10K00J

http://manoman.sqhill.com

Component No.	Tektronix Part No.	Serial/Assembly No. Effective	Dscont	Name & Description	Mfr. Code	Mfr. Part No.
A20R29	321-0124-00			RES,FXD,FILM:191 OHM,1%,0.125W, TC=T0	07716	CEAD191R0F
A20R30	321-0089-00			RES,FXD,FILM:82.5 OHM,1%,0.125W,TC=T0	91637	CMF55116G82R50F
A20R32	315-0300-00			RES,FXD,FILM:30 OHM,5%,0.25W	19701	5043CX30R00J
A20R33	321-0135-00			RES,FXD,FILM:249 OHM,1%,0.125W,TC=T0	07716	CEAD249R0F
A20R34	321-0102-00			RES,FXD,FILM:113 OHM,1%,0.125W,TC=T0	07716	CEAD113R0F
A20R35	321-0181-00			RES,FXD,FILM:750 OHM,1%,0.125W,TC=T0	07716	CEAD750R0F
A20R36	321-0227-00			RES,FXD,FILM:2.26K OHM,1%,0.125W,TC=T0	07716	CEAD22600F
A20R37	315-0304-00			RES,FXD,FILM:300K OHM,5%,0.25W	57668	NTR25J-E300K
A20R38	315-0104-00			RES,FXD,FILM:100K OHM,5%,0.25W	57668	NTR25J-E100K
A20R39	315-0362-00			RES,FXD,FILM:3.6K OHM,5%,0.25W	19701	5043CX3K600J
A20R40	315-0102-00			RES,FXD,FILM:1K OHM,5%,0.25W	57668	NTR25JE01K0
A20R41	315-0100-00			RES,FXD,FILM:10 OHM,5%,0.25W	19701	5043CX10RR00J
A20R42	321-0173-00			RES,FXD,FILM:619 OHM,1%,0.125W,TC=T0	07716	CEAD619R0F
A20R43	321-0303-00			RES,FXD,FILM:14.0K OHM,1%,0.125W,TC=T0	07716	CEAD 14001F
A20R44	315-0101-00			RES,FXD,FILM:100 OHM,5%,0.25W	57668	NTR25J-E 100E
A20R45	315-0181-00			RES,FXD,FILM:180 OHM,5%,0.25W	57668	NTR25J-E180E
A20R46	321-0135-00			RES,FXD,FILM:249 OHM,1%,0.125W,TC=T0	07716	CEAD249R0F
A20R47	321-0181-00			RES,FXD,FILM:750 OHM,1%,0.125W,TC=T0	07716	CEAD750R0F
A20R48	315-0101-00			RES,FXD,FILM:100 OHM,5%,0.25W	57668	NTR25J-E 100E
A20R49	315-0181-00			RES,FXD,FILM:180 OHM,5%,0.25W	57668	NTR25J-E180E
A20R50	315-0300-00			RES,FXD,FILM:30 OHM,5%,0.25W	19701	5043CX30R00J
A20R51	315-0431-00			RES,FXD,FILM:430 OHM,5%,0.25W	19701	5043CX430R0J
A20R52	315-0301-00			RES,FXD,FILM:300 OHM,5%,0.25W (NOMINAL VALUE)	57668	NTR25J-E300E
A20R52	315-0271-00			RES,FXD,FILM:270 OHM,5%,0.25W (TEST SELECTED)	57668	NTR25J-E270E
A20R53	323-0197-00			RES,FXD,FILM:1.10K OHM,1%,0.5W,TC=T0	19701	5053RD1K100F
A20R54	321-0360-00			RES,FXD,FILM:54.9K OHM,1%,0.125W,TC=T0	19701	5033ED54K90F
A20R55	315-0470-00			RES,FXD,FILM:47 OHM,5%,0.25W	57668	NTR25J-E47E0
A20R56	301-0103-00			RES,FXD,FILM:10K OHM,5%,0.50W	19701	5053CX10K00J
A20R57	315-0100-00			RES,FXD,FILM:10 OHM,5%,0.25W	19701	5043CX10RR00J
A20R58	322-0215-00			RES,FXD,FILM:1.69K OHM,1%,0.25W,TC=T0	19701	5043RD1K690F
A20R59	321-0333-00			RES,FXD,FILM:28.7K OHM,1%,0.125W,TC=T0	19701	5043ED28K70F
A20R60	301-0103-00			RES,FXD,FILM:10K OHM,5%,0.50W	19701	5053CX10K00J
A20R61	315-0100-00			RES,FXD,FILM:10 OHM,5%,0.25W	19701	5043CX10RR00J
A20R62	322-0215-00			RES,FXD,FILM:1.69K OHM,1%,0.25W,TC=T0	19701	5043RD1K690F
A20R63	305-0242-00			RES,FXD,CMPSN:2.4K OHM,5%,2W	01121	HB2425
A20R64	305-0242-00			RES,FXD,CMPSN:2.4K OHM,5%,2W	01121	HB2425
A20R65	315-0331-00			RES,FXD,FILM:330 OHM,5%,0.25W	57668	NTR25J-E330E
A20R66	321-0289-00			RES,FXD,FILM:10.0K OHM,1%,0.125W,TC=T0	19701	5033ED10K0F
A20R67	321-0896-03			RES,FXD,FILM:9.8K OHM,0.25%,0.125W,TC=T2	19701	5033RE9K800C
A20R68	315-0331-00			RES,FXD,FILM:330 OHM,5%,0.25W	57668	NTR25J-E330E
A20R69	321-0289-00			RES,FXD,FILM:10.0K OHM,1%,0.125W,TC=T0	19701	5033ED10K0F
A20R70	321-0317-00			RES,FXD,FILM:19.6K OHM,1%,0.125W,TC=T0	07716	CEAD19601F
A20R71	315-0103-00			RES,FXD,FILM:10K OHM,5%,0.25W	19701	5043CX10K00J
A20R72	315-0100-00			RES,FXD,FILM:10 OHM,5%,0.25W	19701	5043CX10RR00J
A20R73	323-0385-01			RES,FXD,FILM:100K OHM,0.5%,0.5W,TC=T0	19701	5053RD100K00
A20R74	315-0750-00			RES,FXD,FILM:75 OHM,5%,0.25W	57668	NTR25J-E75E0
A20R75	315-0100-00			RES,FXD,FILM:10 OHM,5%,0.25W	19701	5043CX10RR00J
A20R76	315-0103-00			RES,FXD,FILM:10K OHM,5%,0.25W	19701	5043CX10K00J
A20R77	315-0242-00			RES,FXD,FILM:2.4K OHM,5%,0.25W	57668	NTR25J-E02K4
A20R78	315-0122-00			RES,FXD,FILM:1.2K OHM,5%,0.25W	57668	NTR25J-E01K2
A20R79	315-0133-00			RES,FXD,FILM:13K OHM,5%,0.25W	19701	5043CX13K00J
A20R80	315-0133-00			RES,FXD,FILM:13K OHM,5%,0.25W	19701	5043CX13K00J
A20R81	315-0243-00			RES,FXD,FILM:24K OHM,5%,0.25W	57668	NTR25J-E24K0
A20R82	315-0472-00			RES,FXD,FILM:4.7K OHM,5%,0.25W	57668	NTR25J-E04K7
A20R83	315-0821-00			RES,FXD,FILM:820 OHM,5%,0.25W	19701	5043CX820R0J
A20R84	315-0621-00			RES,FXD,FILM:620 OHM,5%,0.25W	57668	NTR25J-E620E
A20R85	315-0510-00			RES,FXD,FILM:51 OHM,5%,0.25W	19701	5043CX51R00J

http://manoman.sqhill.com

Component No.	Tektronix Part No.	Serial/Assembly No. Effective	Dscont	Name & Description	Mfr. Code	Mfr. Part No.
A20R86	311-2230-00			RES,VAR,NONWM:TRMR,500 OHM,20%,0.50 LINEAR	TK1450	GF06UT 500
A20R87	315-0100-00			RES,FXD,FILM:10 OHM,5%,0.25W	19701	5043CX10RR00J
A20R88	301-0302-00			RES,FXD,FILM:3K OHM,5%,0.5W	19701	5053CX3K000J
A20R89	323-0385-01			RES,FXD,FILM:100K OHM,0.5%,0.5W,TC=T0	19701	5053RD100K0D
A20R90	321-0309-00			RES,FXD,FILM:16.2K OHM,1%,0.125W,TC=T0	19701	5033ED16K20F
A20R91	322-0322-00			RES,FXD,FILM:22.1K OHM,1%,0.25W,TC=T0	19701	5034RD22K1
A20R92	322-0283-00			RES,FXD,FILM:8.66K OHM,1%,0.25W,TC=T0	19701	5043RD8K660F
A20R93	315-0823-00			RES,FXD,FILM:82K OHM,5%,0.25W	57668	NTR25J-E82K
A20R94	315-0100-00			RES,FXD,FILM:10 OHM,5%,0.25W	19701	5043CX10RR00J
A20R95	315-0100-00			RES,FXD,FILM:10 OHM,5%,0.25W	19701	5043CX10RR00J
A20R96	321-0322-00			RES,FXD,FILM:22.1K OHM,0.1%,0.125W,TC=T0	19701	5033ED22K10F
A20R97	315-0750-00			RES,FXD,FILM:75 OHM,5%,0.25W	57668	NTR25J-E75E0
A20R98	321-0237-00			RES,FXD,FILM:2.87K OHM,1%,0.125W,TC=T0	07716	CEAD 28700F
A20R99	315-0203-00			RES,FXD,FILM:20K OHM,5%,0.25W	57668	NTR25J-E 20K
A20R100	311-2238-00			RES,VAR,NONWM:TRMR,50K OHM,20%,0.5W LINEAR	TK1450	GF06UT 50 K
A20R101	321-0277-00			RES,FXD,FILM:7.50K OHM,1%,0.125W,TC=T0	24546	NA5507501F
A20R102	315-0270-00			RES,FXD,FILM:27 OHM,5%,0.25W	19701	5043CX27R00J
A20R103	321-0292-00			RES,FXD,FILM:10.7K OHM,1%,0.125W,TC=T0	07716	CEAD10701F
A20R104	315-0100-00			RES,FXD,FILM:10 OHM,5%,0.25W	19701	5043CX10RR00J
A20R105	321-0223-00			RES,FXD,FILM:2.05K OHM,1%,0.125W,TC=T0	80009	321-0223-00
A20R106	321-0240-00			RES,FXD,FILM:3.09K OHM,1%,0.125W,TC=T0	07716	CEAD30900F
A20R107	322-0336-00			RES,FXD,FILM:30.9K OHM,1%,0.25W,TC=T0	75042	CEBT0-3092F
A20R108	315-0750-00			RES,FXD,FILM:75 OHM,5%,0.25W	57668	NTR25J-E75E0
A20R109	307-0103-00			RES,FXD,CMPSN:2.7 OHM,5%,0.25W	01121	CB27G5
A20R110	307-0103-00			RES,FXD,CMPSN:2.7 OHM,5%,0.25W	01121	CB27G5
A20R111	321-0135-00			RES,FXD,FILM:249 OHM,1%,0.125W,TC=T0	07716	CEAD249R0F
A20R112	315-0300-00			RES,FXD,FILM:30 OHM,5%,0.25W	19701	5043CX30R00J
A20R113	315-0102-00			RES,FXD,FILM:1K OHM,5%,0.25W	57668	NTR25JE01K0
A20R114	315-0470-00			RES,FXD,FILM:47 OHM,5%,0.25W	57668	NTR25J-E47E0
A20R115	315-0150-00			RES,FXD,FILM:15 OHM,5%,0.25W	19701	5043CX15R00J
A20R200	317-0300-00			RES,FXD,CMPSN:30 OHM,5%,0.125W	01121	BB3005
A20R210	317-0100-00			RES,FXD,CMPSN:10 OHM,5%,0.125W	01121	BB1005
A20R220	317-0470-00			RES,FXD,CMPSN:47 OHM,5%,0.125W	01121	BB4705
A20R230	317-0100-00			RES,FXD,CMPSN:10 OHM,5%,0.125W	01121	BB1005
A20RT31	307-0122-00			RES,THERMAL:50 HM,10%,NTC	14193	1B15-500K
A20VR1	152-0590-00			SEMICOND DVC,DI:ZEN,SI,18V,5%,0.4W,DO-7	04713	SZG35014K2
A20VR2	153-0050-00			SEMICOND DVC,DI:CHECKED	80009	153-0050-00
A20VR3	153-0050-00			SEMICOND DVC,DI:CHECKED	80009	153-0050-00

http://manoman.sqhill.com

Component No.	Tektronix Part No.	Serial/Assembly No. Effective	Dscont	Name & Description	Mfr. Code	Mfr. Part No.
A21	670-3970-00			CIRCUIT BD ASSY:Z AXIS	80009	670-3970-00
A21C2205	283-0023-00			CAP,FXD,CER DI:0.1UF,+80-20%,12V	71590	2DDU66B104Z
A21C2211	290-0745-00			CAP,FXD,ELCTLT:22UF,+50-10%,25V	54473	ECE-A25V22L
A21C2212	290-0745-00			CAP,FXD,ELCTLT:22UF,+50-10%,25V	54473	ECE-A25V22L
A21C2215	283-0023-00			CAP,FXD,CER DI:0.1UF,+80-20%,12V	71590	2DDU66B104Z
A21C2217	283-0003-00			CAP,FXD,CER DI:0.01UF,+80-20%,150V	59821	D103Z40Z5UJDCEX
A21C2218	290-0778-00			CAP,FXD,ELCTLT:1UF,+50 -10%,50V,NPLZD	54473	ECE-A50N1
A21C2224	283-0000-00			CAP,FXD,CER DI:0.001UF,+100-0%,500V	59660	831-610-Y5U0102P
A21C2232	281-0592-00			CAP,FXD,CER DI:4.7PF,+/-0.5PF,500V	52763	2RDPLZ007 4P70DC
A21C2235	281-0166-00			CAP,VAR,AIR DI:1.9-15.7 PF,250V	74970	187-0109-055
A21C2236	283-0081-00			CAP,FXD,CER DI:0.1UF,+80-20%,25V	59821	2DDU69E104Z
A21C2237	283-0180-00			CAP,FXD,CER DI:5600PF,20%,200V	04222	3429 200E 562M
A21C2242	283-0057-00			CAP,FXD,CER DI:0.1UF,+80-20%,200V	04222	SR306E104ZAA
A21C2244	283-0177-00			CAP,FXD,CER DI:1UF,+80-20%,25V	04222	SR302E105ZAATR
A21C2248	281-0661-00			CAP,FXD,CER DI:0.8PF,+/-0.1PF,500V	52763	2RDPLZ007 0P80BC
A21C2249	283-0084-00			CAP,FXD,CER DI:270PF,5%,1000V	59660	838533X5F02715
A21C2253	283-0057-00			CAP,FXD,CER DI:0.1UF,+80-20%,200V	04222	SR306E104ZAA
A21C2263	283-0023-00			CAP,FXD,CER DI:0.1UF,+80-20%,12V	71590	2DDU66B104Z
A21C2271	283-0003-00			CAP,FXD,CER DI:0.01UF,+80-20%,150V	59821	D103Z40Z5UJDCEX
A21C2282	283-0188-00			CAP,FXD,CER DI:1000PF,20%,6000V	51406	DHR19X5T102M-6KV
A21C2283	283-0013-00			CAP,FXD,CER DI:0.01UF,-0+100%,1000V	59660	818-602ZSU0103P
A21C2288	281-0627-00			CAP,FXD,CER DI:1PF,+/-0.25PF,500V	52763	2RDPLZ007 1P00CC
A21C2289	283-0188-00			CAP,FXD,CER DI:1000PF,20%,6000V	51406	DHR19X5T102M-6KV
A21C2297	283-0188-00			CAP,FXD,CER DI:1000PF,20%,6000V	51406	DHR19X5T102M-6KV
A21C2323	283-0054-00			CAP,FXD,CER DI:150PF,5%,200V	59660	855-535 U2J0151J
A21C2326	281-0592-00			CAP,FXD,CER DI:4.7PF,+/-0.5PF,500V	52763	2RDPLZ007 4P70DC
A21C2327	283-0023-00			CAP,FXD,CER DI:0.1UF,+80-20%,12V	71590	2DDU66B104Z
A21C2346	283-0003-00			CAP,FXD,CER DI:0.01UF,+80-20%,150V	59821	D103Z40Z5UJDCEX
A21C2356	283-0003-00			CAP,FXD,CER DI:0.01UF,+80-20%,150V	59821	D103Z40Z5UJDCEX
A21C2364	283-0003-00			CAP,FXD,CER DI:0.01UF,+80-20%,150V	59821	D103Z40Z5UJDCEX
A21C2371	283-0003-00			CAP,FXD,CER DI:0.01UF,+80-20%,150V	59821	D103Z40Z5UJDCEX
A21C2379	281-0661-00			CAP,FXD,CER DI:0.8PF,+/-0.1PF,500V	52763	2RDPLZ007 0P80BC
A21C2384	283-0023-00			CAP,FXD,CER DI:0.1UF,+80-20%,12V	71590	2DDU66B104Z
A21C2385	283-0000-00			CAP,FXD,CER DI:0.001UF,+100-0%,500V	59660	831-610-Y5U0102P
A21C2393	283-0023-00			CAP,FXD,CER DI:0.1UF,+80-20%,12V	71590	2DDU66B104Z
A21C2405	283-0003-00			CAP,FXD,CER DI:0.01UF,+80-20%,150V	59821	D103Z40Z5UJDCEX
A21C2406	283-0023-00			CAP,FXD,CER DI:0.1UF,+80-20%,12V	71590	2DDU66B104Z
A21C2425	281-0204-00			CAP,VAR,PLASTIC:2-22PF,100V	80031	2807C00222MJ02
A21C2432	281-0577-00			CAP,FXD,CER DI:14PF,5%,500V	52763	2RDPLZ007 14P0JC
A21C2435	281-0204-00			CAP,VAR,PLASTIC:2-22PF,100V	80031	2807C00222MJ02
A21C2436	283-0003-00			CAP,FXD,CER DI:0.01UF,+80-20%,150V	59821	D103Z40Z5UJDCEX
A21CR2181	152-0141-02			SEMICOND DVC,DI:SM,SI,30V,150MA,30V,DO-35	03508	DA2527 (1N4152)
A21CR2182	152-0141-02			SEMICOND DVC,DI:SM,SI,30V,150MA,30V,DO-35	03508	DA2527 (1N4152)
A21CR2218	152-0141-02			SEMICOND DVC,DI:SM,SI,30V,150MA,30V,DO-35	03508	DA2527 (1N4152)
A21CR2222	152-0141-02			SEMICOND DVC,DI:SM,SI,30V,150MA,30V,DO-35	03508	DA2527 (1N4152)
A21CR2223	152-0141-02			SEMICOND DVC,DI:SM,SI,30V,150MA,30V,DO-35	03508	DA2527 (1N4152)
A21CR2227	152-0141-02			SEMICOND DVC,DI:SM,SI,30V,150MA,30V,DO-35	03508	DA2527 (1N4152)
A21CR2242	152-0242-00			SEMICOND DVC,DI:SIG,SI,225V,0.2A,DO-7	07263	FDH5004
A21CR2253	152-0333-00			SEMICOND DVC,DI:SM,SI,55V,200MA,DO-35	07263	FDH-6012
A21CR2264	152-0141-02			SEMICOND DVC,DI:SM,SI,30V,150MA,30V,DO-35	03508	DA2527 (1N4152)
A21CR2302	152-0141-02			SEMICOND DVC,DI:SM,SI,30V,150MA,30V,DO-35	03508	DA2527 (1N4152)
A21CR2304	152-0141-02			SEMICOND DVC,DI:SM,SI,30V,150MA,30V,DO-35	03508	DA2527 (1N4152)
A21CR2306	152-0141-02			SEMICOND DVC,DI:SM,SI,30V,150MA,30V,DO-35	03508	DA2527 (1N4152)
A21CR2315	152-0141-02			SEMICOND DVC,DI:SM,SI,30V,150MA,30V,DO-35	03508	DA2527 (1N4152)
A21CR2316	152-0141-02			SEMICOND DVC,DI:SM,SI,30V,150MA,30V,DO-35	03508	DA2527 (1N4152)
A21CR2317	152-0322-00			SEMICOND DVC,DI:SCHOTTKY BARRIER,SI,15V	50434	5082-2672
A21CR2333	152-0141-02			SEMICOND DVC,DI:SM,SI,30V,150MA,30V,DO-35	03508	DA2527 (1N4152)
A21CR2335	152-0141-02			SEMICOND DVC,DI:SM,SI,30V,150MA,30V,DO-35	03508	DA2527 (1N4152)
A21CR2396	152-0141-02			SEMICOND DVC,DI:SM,SI,30V,150MA,30V,DO-35	03508	DA2527 (1N4152)

http://manoman.sqhill.com

Component No.	Tektronix Part No.	Serial/Assembly No. Effective	Dscont	Name & Description	Mfr. Code	Mfr. Part No.
A21CR2397	152-0141-02			SEMICOND DVC,DI:SW,SI,30V,150MA,30V,DO-35	03508	DA2527 (1N4152)
A21CR2408	152-0574-00			SEMICOND DVC,DI:SW,SI,120V,0.15A,DO-35	12969	NDP566
A21CR2438	152-0574-00			SEMICOND DVC,DI:SW,SI,120V,0.15A,DO-35	12969	NDP566
A21DS2292	150-0035-00			LAMP,GLOW:90V MAX,0.3MA,AID-T,WIRE LD	TK0213	JH005/3011JA
A21DS2294	150-0035-00			LAMP,GLOW:90V MAX,0.3MA,AID-T,WIRE LD	TK0213	JH005/3011JA
A21DS2295	150-0035-00			LAMP,GLOW:90V MAX,0.3MA,AID-T,WIRE LD	TK0213	JH005/3011JA
A21DS2296	150-0035-00			LAMP,GLOW:90V MAX,0.3MA,AID-T,WIRE LD	TK0213	JH005/3011JA
A21DS2298	150-0035-00			LAMP,GLOW:90V MAX,0.3MA,AID-T,WIRE LD	TK0213	JH005/3011JA
A21L2205	276-0507-00			SHLD BEAD,ELEK:FERRITE	02114	56-590-65B/3B
A21L2215	276-0507-00			SHLD BEAD,ELEK:FERRITE	02114	56-590-65B/3B
A21P2224	131-0608-00			TERMINAL,PIN:0.365 L X 0.025 BRZ GLD PL	22526	48283-036
A21P2242	131-0608-00			TERMINAL,PIN:0.365 L X 0.025 BRZ GLD PL	22526	48283-036
A21P2273	131-0589-00			TERM,PIN:0.46 L X 0.025 SQ PH BRZ GLD	22526	48283-029
A21P2297	131-0589-00			TERM,PIN:0.46 L X 0.025 SQ PH BRZ GLD	22526	48283-029
A21P2305	131-0608-00			TERMINAL,PIN:0.365 L X 0.025 BRZ GLD PL	22526	48283-036
A21P2311	131-0608-00			TERMINAL,PIN:0.365 L X 0.025 BRZ GLD PL	22526	48283-036
A21P2436	131-0589-00			TERM,PIN:0.46 L X 0.025 SQ PH BRZ GLD	22526	48283-029
A21Q2206	151-0333-00			TRANSISTOR:SELECTED	04713	SPS1752
A21Q2216	151-0333-00			TRANSISTOR:SELECTED	04713	SPS1752
A21Q2236	151-0325-00			TRANSISTOR:PNP,SI,TO-92,SEL	80009	151-0325-00
A21Q2242	151-0411-00			TRANSISTOR:NPN,SI	04713	SRF709
A21Q2254	151-0270-03			TRANSISTOR:SCREENED	04713	ST919H
A21Q2264	151-0274-01			TRANSISTOR:SCREENED	04713	SS7394H
A21Q2274	151-0220-00			TRANSISTOR:PNP,SI,TO-92	80009	151-0220-00
A21Q2302	151-0333-00			TRANSISTOR:SELECTED	04713	SPS1752
A21Q2306	151-0333-00			TRANSISTOR:SELECTED	04713	SPS1752
A21Q2316	151-0333-00			TRANSISTOR:SELECTED	04713	SPS1752
A21Q2322	151-0302-00			TRANSISTOR:NPN,SI,TO-18	04713	ST899
A21Q2328	151-0302-00			TRANSISTOR:NPN,SI,TO-18	04713	ST899
A21Q2332	151-0219-00			TRANSISTOR:PNP,SI,R-124	07263	SO22650
A21Q2336	151-0126-00			TRANSISTOR:NPN,SI,TO-18	04713	ST1046
A21Q2344	151-0302-00			TRANSISTOR:NPN,SI,TO-18	04713	ST899
A21Q2354	151-0302-00			TRANSISTOR:NPN,SI,TO-18	04713	ST899
A21Q2362	151-0453-00			TRANSISTOR:PNP,SI,TO-92	27014	ORDER BY DESCR
A21Q2364	151-0302-00			TRANSISTOR:NPN,SI,TO-18	04713	ST899
A21Q2368	151-0453-00			TRANSISTOR:PNP,SI,TO-92	27014	ORDER BY DESCR
A21Q2372	151-0126-00			TRANSISTOR:NPN,SI,TO-18	04713	ST1046
A21Q2374	151-0126-00			TRANSISTOR:NPN,SI,TO-18	04713	ST1046
A21Q2378	151-0126-00			TRANSISTOR:NPN,SI,TO-18	04713	ST1046
A21Q2384	151-0350-00			TRANSISTOR:PNP,SI,TO-92	04713	SPS6700
A21Q2394	151-0347-00			TRANSISTOR:NPN,SI,TO-92	04713	SPS7951
A21Q2406	151-0347-00			TRANSISTOR:NPN,SI,TO-92	04713	SPS7951
A21Q2422	151-0453-00			TRANSISTOR:PNP,SI,TO-92	27014	ORDER BY DESCR
A21Q2432	151-0453-00			TRANSISTOR:PNP,SI,TO-92	27014	ORDER BY DESCR
A21Q2436	151-0432-00			TRANSISTOR:NPN,SI,TO-106	04713	SP58512
A21R2204	315-0330-00			RES,FXD,FILM:33 OHM,5%,0.25W	19701	5043CX33R00J
A21R2205	315-0101-00			RES,FXD,FILM:100 OHM,5%,0.25W	57668	NTR25J-E 100E
A21R2206	321-0345-00			RES,FXD,FILM:38.3K OHM,1%,0.125W,TC=T0	19701	5043ED38K30F
A21R2207	321-0350-00			RES,FXD,FILM:43.2K OHM,1%,0.125W,TC=T0	19701	5043ED43K20F
A21R2209	321-0394-00			RES,FXD,FILM:124K OHM,1%,0.125W,TC=T0	07716	CEAD12402F
A21R2214	315-0330-00			RES,FXD,FILM:33 OHM,5%,0.25W	19701	5043CX33R00J
A21R2215	315-0101-00			RES,FXD,FILM:100 OHM,5%,0.25W	57668	NTR25J-E 100E
A21R2216	321-0345-00			RES,FXD,FILM:38.3K OHM,1%,0.125W,TC=T0	19701	5043ED38K30F
A21R2217	315-0221-00			RES,FXD,FILM:220 OHM,5%,0.25W	57668	NTR25J-E220E
A21R2218	307-0505-00			RES NTWK,FXD,FI:HIGH VOLTAGE REGULATOR	80009	307-0505-00
A21R2219	321-0481-00			RES,FXD,FILM:1M OHM,1%,0.125W,TC=T0	19701	5043ED1M000F
A21R2220	311-1242-00			RES,VAR,NONWW:TRMR,200K OHM,0.5W	32997	3386X-T07-204
A21R2221	315-0475-00			RES,FXD,FILM:4.7M OHM,5%,0.25W	01121	CB4755
A21R2222	316-0126-00			RES,FXD,CMPSN:12M OHM,10%,0.25W	01121	CB1261

http://manoman.sqhill.com

Component No.	Tektronix Part No.	Serial/Assembly No. Effective	Dscont	Name & Description	Mfr. Code	Mfr. Part No.
A21R2223	315-0106-00			RES,FXD,FILM:10M OHM,5%,0.25W	01121	CB1065
A21R2224	321-0400-00			RES,FXD,FILM:143K OHM,1%,0.125W,TC=T0	19701	5043ED143K0F
A21R2226	315-0331-00			RES,FXD,FILM:330 OHM,5%,0.25W	57668	NTR25J-E330E
A21R2227	315-0242-00			RES,FXD,FILM:2.4K OHM,5%,0.25W	57668	NTR25J-E02K4
A21R2228	315-0153-00			RES,FXD,FILM:15K OHM,5%,0.25W	19701	5043CX15K00J
A21R2231	315-0471-00			RES,FXD,FILM:470 OHM,5%,0.25W	57668	NTR25J-E470E
A21R2232	315-0122-00			RES,FXD,FILM:1.2K OHM,5%,0.25W	57668	NTR25J-E01K2
A21R2233	321-0182-00			RES,FXD,FILM:768 OHM,1%,0.125W,TC=T0	07716	CEAD768R0F
A21R2234	315-0181-00			RES,FXD,FILM:180 OHM,5%,0.25W	57668	NTR25J-E180E
A21R2235	311-1263-00			RES,VAR,NONWW:1K OHM,10%,0.50W	32997	3329P-L58-102
A21R2236	315-0100-00			RES,FXD,FILM:10 OHM,5%,0.25W	19701	5043CX10RR00J
A21R2240	321-0319-00			RES,FXD,FILM:20.5K OHM,1%,0.125W,TC=T0	19701	5033ED20K50F
A21R2241	315-0102-00			RES,FXD,FILM:1K OHM,5%,0.25W	57668	NTR25JE01K0
A21R2242	315-0101-00			RES,FXD,FILM:100 OHM,5%,0.25W	57668	NTR25J-E 100E
A21R2244	315-0100-00			RES,FXD,FILM:10 OHM,5%,0.25W	19701	5043CX10RR00J
A21R2248	323-0312-00			RES,FXD,FILM:17.4K OHM,1%,0.5W,TC=T0	91637	MFF1226G17401F
A21R2249	315-0103-00			RES,FXD,FILM:10K OHM,5%,0.25W	19701	5043CX10K00J
A21R2251	321-0261-00			RES,FXD,FILM:5.11K OHM,1%,0.125W,TC=T0	19701	5033ED5K110F
A21R2252	321-0360-00			RES,FXD,FILM:54.9K OHM,1%,0.125W,TC=T0	19701	5033ED54K90F
A21R2253	315-0180-00			RES,FXD,FILM:18 OHM,5%,0.25W	19701	5043CX18R00J
A21R2254	321-0158-00			RES,FXD,FILM:432 OHM,1%,0.125W,TC=T0	07716	CEAD432R0F
A21R2255	305-0163-00			RES,FXD,CMPSN:16K OHM,5%,2W	01121	HB1635
A21R2261	315-0103-00			RES,FXD,FILM:10K OHM,5%,0.25W	19701	5043CX10K00J
A21R2262	315-0222-00			RES,FXD,FILM:2.2K OHM,5%,0.25W	57668	NTR25J-E02K2
A21R2263	315-0330-00			RES,FXD,FILM:33 OHM,5%,0.25W	19701	5043CX33R00J
A21R2264	315-0101-00			RES,FXD,FILM:100 OHM,5%,0.25W	57668	NTR25J-E 100E
A21R2271	315-0241-00			RES,FXD,FILM:240 OHM,5%,0.25W	19701	5043CX240R0J
A21R2272	315-0331-00			RES,FXD,FILM:330 OHM,5%,0.25W	57668	NTR25J-E330E
A21R2274	315-0220-00			RES,FXD,FILM:22 OHM,5%,0.25W	19701	5043CX22R00J
A21R2282	301-0242-00			RES,FXD,FILM:2.4K OHM,5%,0.5W	19701	5053CX2K400J
A21R2283	301-0302-00			RES,FXD,FILM:3K OHM,5%,0.5W	19701	5053CX3K000J
A21R2284	315-0106-00			RES,FXD,FILM:10M OHM,5%,0.25W	01121	CB1065
A21R2285	311-1214-00			RES,VAR,NONWW:TRMR,200K OHM,0.5W	32997	3386F-T04-204
A21R2289	301-0151-00			RES,FXD,FILM:150 OHM,5%,0.5W	TK1727	SFR30 2322-182
A21R2294	315-0155-00			RES,FXD,FILM:1.5M OHM,5%,0.25W	19701	5043CX1M500J
A21R2297	301-0471-00			RES,FXD,FILM:470 OHM,5%,0.5W	19701	5053CX 470R0J
A21R2298	301-0101-00			RES,FXD,FILM:100 OHM,5%,0.5W	19701	5053CX100R0J
A21R2302	315-0470-00			RES,FXD,FILM:47 OHM,5%,0.25W	57668	NTR25J-E47E0
A21R2303	321-0303-00			RES,FXD,FILM:14.0K OHM,1%,0.125W,TC=T0	07716	CEAD 14001F
A21R2305	315-0684-00			RES,FXD,FILM:680K OHM,5%,0.25W	01121	CB6845
A21R2306	321-0303-00			RES,FXD,FILM:14.0K OHM,1%,0.125W,TC=T0	07716	CEAD 14001F
A21R2309	315-0472-00			RES,FXD,FILM:4.7K OHM,5%,0.25W	57668	NTR25J-E04K7
A21R2312	315-0472-00			RES,FXD,FILM:4.7K OHM,5%,0.25W	57668	NTR25J-E04K7
A21R2315	311-1245-00			RES,VAR,NONWW:TRMR,10K OHM,0.5W	32997	3386X-DY6-103
A21R2316	315-0470-00			RES,FXD,FILM:47 OHM,5%,0.25W	57668	NTR25J-E47E0
A21R2317	315-0274-00			RES,FXD,FILM:270K OHM,5%,0.25W	57668	NTR25J-E270K
A21R2318	321-0308-00			RES,FXD,FILM:15.8K OHM,1%,0.125W,TC=T0	07716	CEAD 15801F
A21R2319	315-0102-00			RES,FXD,FILM:1K OHM,5%,0.25W	57668	NTR25JE01K0
A21R2322	321-0290-00			RES,FXD,FILM:10.2K OHM,1%,0.125W,TC=T0	19701	5043ED10K20F
A21R2323	315-0510-00			RES,FXD,FILM:51 OHM,5%,0.25W	19701	5043CX51R00J
A21R2324	315-0221-00			RES,FXD,FILM:220 OHM,5%,0.25W	57668	NTR25J-E220E
A21R2325	315-0152-00			RES,FXD,FILM:1.5K OHM,5%,0.25W	57668	NTR25J-E01K5
A21R2326	321-0277-00			RES,FXD,FILM:7.50K OHM,1%,0.125W,TC=T0	24546	NA55D7501F
A21R2327	315-0102-00			RES,FXD,FILM:1K OHM,5%,0.25W	57668	NTR25JE01K0
A21R2328	315-0681-00			RES,FXD,FILM:680 OHM,5%,0.25W	57668	NTR25J-E680E
A21R2332	315-0101-00			RES,FXD,FILM:100 OHM,5%,0.25W	57668	NTR25J-E 100E
A21R2333	315-0332-00			RES,FXD,FILM:3.3K OHM,5%,0.25W	57668	NTR25J-E03K3
A21R2335	321-0239-00			RES,FXD,FILM:3.01K OHM,1%,0.125W,TC=T0	19701	5043ED3K010F
A21R2336	315-0471-00			RES,FXD,FILM:470 OHM,5%,0.25W	57668	NTR25J-E470E

http://manoman.sqhill.com

Component No.	Tektronix Part No.	Serial/Assembly No. Effective	Dscont	Name & Description	Mfr. Code	Mfr. Part No.
A21R2338	321-0316-00			RES,FXD,FILM:19.1K OHM,1%,0.125W,TC=T0	07716	CEAD19101F
A21R2339	321-0239-00			RES,FXD,FILM:3.01K OHM,1%,0.125W,TC=T0	19701	5043ED3K010F
A21R2342	315-0473-00			RES,FXD,FILM:47K OHM,5%,0.25W	57668	NTR25J-E47K0
A21R2343	315-0103-00			RES,FXD,FILM:10K OHM,5%,0.25W	19701	5043CX10K00J
A21R2344	315-0183-00			RES,FXD,FILM:18K OHM,5%,0.25W	19701	5043CX18K00J
A21R2345	315-0623-00			RES,FXD,FILM:62K OHM,5%,0.25W	19701	5043CX62K00J
A21R2346	315-0103-00			RES,FXD,FILM:10K OHM,5%,0.25W	19701	5043CX10K00J
A21R2354	315-0103-00			RES,FXD,FILM:10K OHM,5%,0.25W	19701	5043CX10K00J
A21R2355	315-0623-00			RES,FXD,FILM:62K OHM,5%,0.25W	19701	5043CX62K00J
A21R2356	315-0103-00			RES,FXD,FILM:10K OHM,5%,0.25W	19701	5043CX10K00J
A21R2361	321-0301-00			RES,FXD,FILM:13.3K OHM,1%,0.125W,TC=T0	07716	CEAD13301F
A21R2362	315-0222-00			RES,FXD,FILM:2.2K OHM,5%,0.25W	57668	NTR25J-E02K2
A21R2363	321-0289-00			RES,FXD,FILM:10.0K OHM,1%,0.125W,TC=T0	19701	5033ED10K0F
A21R2364	301-0152-00			RES,FXD,FILM:1.5K OHM,5%,0.5W	19701	5053CX1K500J
A21R2365	311-1238-00			RES,VAR,NONWW:TRMR,5K OHM,0.5W	32997	3386X-DY6-502
A21R2366	311-1238-00			RES,VAR,NONWW:TRMR,5K OHM,0.5W	32997	3386X-DY6-502
A21R2368	315-0222-00			RES,FXD,FILM:2.2K OHM,5%,0.25W	57668	NTR25J-E02K2
A21R2371	315-0470-00			RES,FXD,FILM:47 OHM,5%,0.25W	57668	NTR25J-E47E0
A21R2372	315-0432-00			RES,FXD,FILM:4.3K OHM,5%,0.25W	57668	NTR25J-E04K3
A21R2373	315-0102-00			RES,FXD,FILM:1K OHM,5%,0.25W	57668	NTR25JE01K0
A21R2374	315-0132-00			RES,FXD,FILM:1.3K OHM,5%,0.25W	57668	NTR25J-E01K3
A21R2376	315-0102-00			RES,FXD,FILM:1K OHM,5%,0.25W	57668	NTR25JE01K0
A21R2377	315-0753-00			RES,FXD,FILM:75K OHM,5%,0.25W	57668	NTR25J-E75K0
A21R2378	321-0320-00			RES,FXD,FILM:21.0K OHM,1%,0.125W,TC=T0	19701	5033ED21K00F
A21R2379	321-0394-00			RES,FXD,FILM:124K OHM,1%,0.125W,TC=T0	07716	CEAD12402F
A21R2383	315-0122-00			RES,FXD,FILM:1.2K OHM,5%,0.25W	57668	NTR25J-E01K2
A21R2384	315-0101-00			RES,FXD,FILM:100 OHM,5%,0.25W	57668	NTR25J-E 100E
A21R2385	315-0104-00			RES,FXD,FILM:100K OHM,5%,0.25W	57668	NTR25J-E100K
A21R2393	315-0470-00			RES,FXD,FILM:47 OHM,5%,0.25W	57668	NTR25J-E47E0
A21R2394	315-0561-00			RES,FXD,FILM:560 OHM,5%,0.25W	19701	5043CX560R0J
A21R2396	315-0432-00			RES,FXD,FILM:4.3K OHM,5%,0.25W	57668	NTR25J-E04K3
A21R2404	315-0152-00			RES,FXD,FILM:1.5K OHM,5%,0.25W	57668	NTR25J-E01K5
A21R2405	315-0470-00			RES,FXD,FILM:47 OHM,5%,0.25W	57668	NTR25J-E47E0
A21R2406	315-0470-00			RES,FXD,FILM:47 OHM,5%,0.25W	57668	NTR25J-E47E0
A21R2409	315-0221-00			RES,FXD,FILM:220 OHM,5%,0.25W	57668	NTR25J-E220E
A21R2422	315-0222-00			RES,FXD,FILM:2.2K OHM,5%,0.25W	57668	NTR25J-E02K2
A21R2425	311-1241-00			RES,VAR,NONWW:TRMR,100K OHM,0.5W	32997	3386X-T07-104
A21R2428	321-0306-00			RES,FXD,FILM:15.0K OHM,1%,0.125W,TC=T0	19701	5033ED15J00F
A21R2431	315-0222-00			RES,FXD,FILM:2.2K OHM,5%,0.25W	57668	NTR25J-E02K2
A21R2432	321-0352-00			RES,FXD,FILM:45.3K OHM,1%,0.125W,TC=T0	07716	CEAD45301F
A21R2435	311-1241-00			RES,VAR,NONWW:TRMR,100K OHM,0.5W	32997	3386X-T07-104
A21R2436	315-0471-00			RES,FXD,FILM:470 OHM,5%,0.25W	57668	NTR25J-E470E
A21R2437	315-0471-00			RES,FXD,FILM:470 OHM,5%,0.25W	57668	NTR25J-E470E
A21R2439	315-0221-00			RES,FXD,FILM:220 OHM,5%,0.25W	57668	NTR25J-E220E
A21TP2212	214-0579-00			TERM,TEST POINT:BRS CD PL	80009	214-0579-00
A21TP2264	214-0579-00			TERM,TEST POINT:BRS CD PL	80009	214-0579-00
A21TP2288	214-0579-00			TERM,TEST POINT:BRS CD PL	80009	214-0579-00
A21TP2298	214-0579-00			TERM,TEST POINT:BRS CD PL	80009	214-0579-00
A21TP2408	214-0579-00			TERM,TEST POINT:BRS CD PL	80009	214-0579-00
A21TP2438	214-0579-00			TERM,TEST POINT:BRS CD PL	80009	214-0579-00
A21U2224	156-0067-00			MICROCKT,LINEAR:OPNL AMPL,SEL	04713	MC1741CP1

http://manoman.sqhill.com

Component No.	Tektronix Part No.	Serial/Assembly No. Effective	Dscont	Name & Description	Mfr. Code	Mfr. Part No.
A22	670-9180-00			CIRCUIT BD ASSY:HIGH VOLTAGE	80009	670-9180-00
A22C2014	283-0261-00			CAP,FXD,CER DI:0.01UF,20%,4000V	51406	DHR28Z5U103M4KV
A22C2016	283-0188-00			CAP,FXD,CER DI:1000PF,20%,6000V	51406	DHR19X5T102M-6KV
A22C2021	283-0261-00			CAP,FXD,CER DI:0.01UF,20%,4000V	51406	DHR28Z5U103M4KV
A22C2031	283-0162-00			CAP,FXD,CER DI:0.01UF,+80-20%,5000V	51406	DHA42Y5S103Z5KV
A22C2033	283-0261-00			CAP,FXD,CER DI:0.01UF,20%,4000V	51406	DHR28Z5U103M4KV
A22C2034	283-0162-00			CAP,FXD,CER DI:0.01UF,+80-20%,5000V	51406	DHA42Y5S103Z5KV
A22C2041	283-0076-00			CAP,FXD,CER DI:27PF,10%,500V	59660	831-500S2L270K
A22C2045	283-0013-00			CAP,FXD,CER DI:0.01UF,-0+100%,1000V	59660	818-602ZSU0103P
A22C2052	283-0188-00			CAP,FXD,CER DI:1000PF,20%,6000V	51406	DHR19X5T102M-6KV
A22C2055	283-0188-00			CAP,FXD,CER DI:1000PF,20%,6000V	51406	DHR19X5T102M-6KV
A22C2056	283-0279-00			CAP,FXD,CER DI:0.001UF,20%,3000V	51406	DHR12Y5S102M3KV
A22C2066	283-0013-00			CAP,FXD,CER DI:0.01UF,-0+100%,1000V	59660	818-602ZSU0103P
A22CR2012	152-0409-00			SEMICOND DVC,DI:RECT,SI,12K,5MA,A298J	83003	VG12X-1
A22CR2014	152-0409-00			SEMICOND DVC,DI:RECT,SI,12K,5MA,A298J	83003	VG12X-1
A22CR2016	152-0409-00			SEMICOND DVC,DI:RECT,SI,12K,5MA,A298J	83003	VG12X-1
A22CR2021	152-0331-00			SEMICOND DVC,DI:RECT,SI,1,500 25MA	TK0191	152-0331-00
A22CR2022	152-0331-00			SEMICOND DVC,DI:RECT,SI,1,500 25MA	TK0191	152-0331-00
A22CR2023	152-0409-00			SEMICOND DVC,DI:RECT,SI,12K,5MA,A298J	83003	VG12X-1
A22CR2045	152-0242-00			SEMICOND DVC,DI:SIG,SI,225V,0.2A,DO-7	07263	FDH5004
A22CR2052	152-0242-00			SEMICOND DVC,DI:SIG,SI,225V,0.2A,DO-7	07263	FDH5004
A22CR2054	152-0242-00			SEMICOND DVC,DI:SIG,SI,225V,0.2A,DO-7	07263	FDH5004
A22CR2055	152-0242-00			SEMICOND DVC,DI:SIG,SI,225V,0.2A,DO-7	07263	FDH5004
A22CR2064	152-0242-00			SEMICOND DVC,DI:SIG,SI,225V,0.2A,DO-7	07263	FDH5004
A22DS2074	150-0035-00			LAMP,GLOW:90V MAX,0.3MA,AID-T,WIRE LD	TK0213	JH005/3011JA
A22K2014	108-0663-00			COIL,REED SW:12V,20MA,SINGLE REED	71707	SP-12-P
A22L2018	108-0553-00			COIL,RF:FIXED,47MH	32159	647000M
A22R2013	315-0182-03			RES,FXD,CMPSN:1.8K OHM,5%,0.25W	01121	CB1825 AB ONLY
A22R2013	315-0202-02			RES,FXD,CMPSN:2K OHM,5%,0.25W	01121	CB2025
A22R2013	315-0272-03			RES,FXD,CMPSN:2.7K 5%,0.25W	80009	315-0272-03
A22R2013	315-0392-03			RES,FXD,CMPSN:3.9K OHM,5%,0.25W	01121	CB3925
A22R2013	315-0472-03			RES,FXD,CMPSN:4.7K OHM,5%,0.25W (NOMINAL VALUE)	01121	CB4725
A22R2013	315-0562-03			RES,FXD,CMPSN:5.6K OHM,5%,0.25W	01121	CB5625 AB ONLY
A22R2013	315-0682-03			RES,FXD,CMPSN:6.8K OHM,5%,0.25 W	01121	CB6825
A22R2013	315-0821-03			RES,FXD,CMPSN:820 OHM,5%,0.25W (A22R2013,TEST SELECTED)	01121	CB8215 CARD PK
A22R2014	315-0102-03			RES,FXD,CMPSN:1K OHM,5%,0.25W	01121	CB1025
A22R2015	301-0105-00			RES,FXD,FILM:1M OHM,5%,0.50W	19701	5053CX1M000J
A22R2016	301-0202-01			RES,FXD,CMPSN:2K OHM,5%,0.5W	01121	EB2025
A22R2017	315-0102-03			RES,FXD,CMPSN:1K OHM,5%,0.25W	01121	CB1025
A22R2018	301-0153-00			RES,FXD,FILM:15K OHM,5%,0.5W	19701	5053CX15K00J
A22R2031	301-0103-02			RES,FXD,CMPSN:10K OHM,5%,0.5W	01121	EB1035
A22R2033	301-0103-02			RES,FXD,CMPSN:10K OHM,5%,0.5W	01121	EB1035
A22R2034	315-0301-02			RES,FXD,CMPSN:300 OHM,5%,0.25W	01121	CB3015
A22R2041	301-0754-01			RES,FXD,CMPSN:750K OHM,5%,0.5W	01121	EB7545
A22R2042	301-0754-01			RES,FXD,CMPSN:750K OHM,5%,0.5W	01121	EB7545
A22R2052	315-0243-03			RES,FXD,CMPSN:24K OHM,5%,0.25W	01121	CB2435
A22R2055	315-0102-03			RES,FXD,CMPSN:1K OHM,5%,0.25W	01121	CB1025
A22R2056	301-0272-02			RES,FXD,CMPSN:2.7K OHM,5%,0.5W	01121	EB2725
A22R2063	301-0102-03			RES,FXD,CMPSN:1K OHM,5%,0.5W	01121	EB1025
A22R2064	307-0506-00			RES NTWK,FXD,FI:HIGH VOLTAGE DIVIDER	80009	307-0506-00
A22R2066	315-0102-03			RES,FXD,CMPSN:1K OHM,5%,0.25W	01121	CB1025
A22R2068	315-0206-01			RES,FXD,CMPSN:20M OHM,5%,0.25W	01121	CB2065 (AB ONLY)
A22R2074	315-0104-03			RES,FXD,CMPSN:100K OHM,5%,0.25W	01121	CB1045
A22T2010	120-1065-02			XFMR,PWR,STPDN:HIGH VOLTAGE	80009	120-1065-02
A22U2012	152-0652-00			SEMICOND DVC,DI:HV MULT,SI,4KV PP IN,8KV OUT	60211	VM166
A22VR2021	152-0247-00			SEMICOND DVC,DI:ZEN,SI,150V,5%,0.4W,DO-7	04713	SZG275K1RL

http://manoman.sqhill.com

Component No.	Tektronix Part No.	Serial/Assembly No. Effective	Dscont	Name & Description	Mfr. Code	Mfr. Part No.
A23	670-9499-00			CIRCUIT BD ASSY:FOCUS	80009	670-9499-00
A23C2101	283-0005-00			CAP,FXD,CER DI:0.01UF,+100-0%,250V	04222	SR303E103ZAA
A23C2112	283-0005-00			CAP,FXD,CER DI:0.01UF,+100-0%,250V	04222	SR303E103ZAA
A23C2113	283-0005-00			CAP,FXD,CER DI:0.01UF,+100-0%,250V	04222	SR303E103ZAA
A23C2116	283-0013-00			CAP,FXD,CER DI:0.01UF,-0+100%,1000V	59660	818-602ZSU0103P
A23C2117	283-0013-00			CAP,FXD,CER DI:0.01UF,-0+100%,1000V	59660	818-602ZSU0103P
A23C2119	290-0767-00			CAP,FXD,ELCTLT:4.7UF,+75-10%,160VDC	54473	ECEA2CS4R7
A23C2121	290-0767-00			CAP,FXD,ELCTLT:4.7UF,+75-10%,160VDC	54473	ECEA2CS4R7
A23C2132	283-0000-00			CAP,FXD,CER DI:0.001UF,+100-0%,500V	59660	831-610-Y5U0102P
A23C2134	290-0778-00			CAP,FXD,ELCTLT:1UF,+50 -10%,50V,NPLZD	54473	ECE-A50N1
A23C2139	283-0000-00			CAP,FXD,CER DI:0.001UF,+100-0%,500V	59660	831-610-Y5U0102P
A23C2150	283-0013-00			CAP,FXD,CER DI:0.01UF,-0+100%,1000V	59660	818-602ZSU0103P
A23C2151	283-0013-00			CAP,FXD,CER DI:0.01UF,-0+100%,1000V	59660	818-602ZSU0103P
A23C2152	283-0013-00			CAP,FXD,CER DI:0.01UF,-0+100%,1000V	59660	818-602ZSU0103P
A23C2155	283-0013-00			CAP,FXD,CER DI:0.01UF,-0+100%,1000V	59660	818-602ZSU0103P
A23C2156	283-0084-00			CAP,FXD,CER DI:270PF,5%,1000V	59660	838533X5F02715
A23C2193	283-0013-00			CAP,FXD,CER DI:0.01UF,-0+100%,1000V	59660	818-602ZSU0103P
A23C2197	283-0013-00			CAP,FXD,CER DI:0.01UF,-0+100%,1000V	59660	818-602ZSU0103P
A23CR2115	152-0331-00			SEMICOND DVC,DI:RECT,SI,1,500 25MA	TK0191	152-0331-00
A23CR2118	152-0586-00			SEMICOND DVC,DI:RECT,SI,600V,0.5A	25403	BYV96D OR BYV95C
A23CR2119	152-0586-00			SEMICOND DVC,DI:RECT,SI,600V,0.5A	25403	BYV96D OR BYV95C
A23CR2123	152-0141-02			SEMICOND DVC,DI:SW,SI,30V,150MA,30V,DO-35	03508	DA2527 (1N4152)
A23CR2125	152-0141-02			SEMICOND DVC,DI:SW,SI,30V,150MA,30V,DO-35	03508	DA2527 (1N4152)
A23CR2133	152-0242-00			SEMICOND DVC,DI:SIG,SI,225V,0.2A,DO-7	07263	FDH5004
A23CR2134	152-0141-02			SEMICOND DVC,DI:SW,SI,30V,150MA,30V,DO-35	03508	DA2527 (1N4152)
A23CR2144	152-0141-02			SEMICOND DVC,DI:SW,SI,30V,150MA,30V,DO-35	03508	DA2527 (1N4152)
A23CR2145	152-0141-02			SEMICOND DVC,DI:SW,SI,30V,150MA,30V,DO-35	03508	DA2527 (1N4152)
A23CR2152	152-0331-00			SEMICOND DVC,DI:RECT,SI,1,500 25MA	TK0191	152-0331-00
A23CR2153	152-0331-00			SEMICOND DVC,DI:RECT,SI,1,500 25MA	TK0191	152-0331-00
A23CR2155	152-0331-00			SEMICOND DVC,DI:RECT,SI,1,500 25MA	TK0191	152-0331-00
A23CR2162	152-0141-02			SEMICOND DVC,DI:SW,SI,30V,150MA,30V,DO-35	03508	DA2527 (1N4152)
A23CR2174	152-0242-00			SEMICOND DVC,DI:SIG,SI,225V,0.2A,DO-7	07263	FDH5004
A23CR2175	152-0242-00			SEMICOND DVC,DI:SIG,SI,225V,0.2A,DO-7	07263	FDH5004
A23CR2176	152-0242-00			SEMICOND DVC,DI:SIG,SI,225V,0.2A,DO-7	07263	FDH5004
A23CR2195	152-0141-02			SEMICOND DVC,DI:SW,SI,30V,150MA,30V,DO-35	03508	DA2527 (1N4152)
A23K2155	108-0405-00			COIL,REED SW:	80009	108-0405-00
A23Q2108	151-0192-00			TRANSISTOR:SELECTED	04713	SPS8801
A23Q2132	151-0169-00			TRANSISTOR:NPN,SI,TO-5	04713	ST830
A23Q2140	151-0190-00			TRANSISTOR:NPN,SI,TO-92	80009	151-0190-00
A23Q2152	151-0350-00			TRANSISTOR:PNP,SI,TO-92	04713	SPS6700
A23Q2156	151-0385-00			TRANSISTOR:PNP,SI,TO-5	02735	2N5416-17
A23Q2160	151-0347-00			TRANSISTOR:NPN,SI,TO-92	04713	SPS7951
A23Q2162	151-0192-00			TRANSISTOR:SELECTED	04713	SPS8801
A23Q2172	151-0347-00			TRANSISTOR:NPN,SI,TO-92	04713	SPS7951
A23Q2178	151-0190-00			TRANSISTOR:NPN,SI,TO-92	80009	151-0190-00
A23Q2182	151-0347-00			TRANSISTOR:NPN,SI,TO-92	04713	SPS7951
A23Q2188	151-0444-00			TRANSISTOR:NPN,SI,TO-92	04713	SPS797
A23Q2195	151-0444-00			TRANSISTOR:NPN,SI,TO-92	04713	SPS797
A23R2101	315-0221-00			RES,FXD,FILM:220 OHM,5%,0.25W	57668	NTR25J-E220E
A23R2102	321-0385-00			RES,FXD,FILM:100K OHM,1%,0.125W,TC=TO	19701	5033ED100K0F
A23R2103	321-0364-00			RES,FXD,FILM:60.4K OHM,1%,0.125W,TC=TO	19701	5043ED60K40F
A23R2104	321-0293-00			RES,FXD,FILM:11.0K OHM,1%,0.125W,TC=TO	07716	CEAD11001F
A23R2105	311-2271-00			RES,VAR,NONWW:TRMR,5K OHM,20%,0.5W	TK1450	GF06VT 5 K OHM
A23R2106	321-0314-00			RES,FXD,FILM:18.2K OHM,1%,0.125W,TC=TO	19701	5043ED18K20F
A23R2108	315-0683-00			RES,FXD,FILM:68K OHM,5%,0.25W	57668	NTR25J-E68K0
A23R2109	315-0433-00			RES,FXD,FILM:43K OHM,5%,0.25W	19701	5043CX43K00J
A23R2110	311-2265-00			RES,VAR,NONWW:TRMR,200K OHM,20%,0.5W	TK1450	GF06VT 200 K OHM
A23R2111	315-0221-00			RES,FXD,FILM:220 OHM,5%,0.25W	57668	NTR25J-E220E
A23R2112	315-0101-00			RES,FXD,FILM:100 OHM,5%,0.25W	57668	NTR25J-E 100E

http://manoman.sqhill.com

Component No.	Tektronix Part No.	Serial/Assembly No. Effective	Dscont	Name & Description	Mfr. Code	Mfr. Part No.
A23R2113	315-0104-00			RES,FXD,FILM:100K OHM,5%,0.25W	57668	NTR25J-E100K
A23R2114	315-0562-00			RES,FXD,FILM:5.6K OHM,5%,0.25W	57668	NTR25J-E05K6
A23R2116	303-0182-00			RES,FXD,CMPSN:1.8K OHM,5%,1W	01121	GB1825
A23R2119	303-0560-00			RES,FXD,CMPSN:56 OHM,5%,1W	01121	GB5605
A23R2121	301-0100-00			RES,FXD,FILM:10 OHM,5%,0.50W	80009	301-0100-00
A23R2124	315-0562-00			RES,FXD,FILM:5.6K OHM,5%,0.25W	57668	NTR25J-E05K6
A23R2125	315-0562-00			RES,FXD,FILM:5.6K OHM,5%,0.25W	57668	NTR25J-E05K6
A23R2132	315-0332-00			RES,FXD,FILM:3.3K OHM,5%,0.25W	57668	NTR25J-E03K3
A23R2134	315-0820-00			RES,FXD,FILM:82 OHM,5%,0.25W	57668	NTR25J-E82E0
A23R2135	311-2269-00			RES,VAR,NONWW:TRMR,20K OHM,20%,0.5W	TK1450	GF06VT 20 K OHM
A23R2136	315-0243-00			RES,FXD,FILM:24K OHM,5%,0.25W	57668	NTR25J-E24K0
A23R2137	315-0183-00			RES,FXD,FILM:18K OHM,5%,0.25W	19701	5043CX18K00J
A23R2139	315-0102-00			RES,FXD,FILM:1K OHM,5%,0.25W	57668	NTR25JE01K0
A23R2140	311-2270-00			RES,VAR,NONWW:TRMR,10K OHM,20%,0.5W	TK1450	GF06VT 10 K OHM
A23R2141	323-0481-00			RES,FXD,FILM:1 MEG OHM,1%,0.5W,TC=T0	75042	CECT0-1004F
A23R2142	323-0481-00			RES,FXD,FILM:1 MEG OHM,1%,0.5W,TC=T0	75042	CECT0-1004F
A23R2144	321-0409-00			RES,FXD,FILM:178K OHM,1%,0.125W,TC=T0	07716	CEAD17802F
A23R2145	321-0418-00			RES,FXD,FILM:221K OHM,1%,0.125W,TC=T0	07716	CEAD22102F
A23R2146	315-0333-00			RES,FXD,FILM:33K OHM,5%,0.25W	57668	NTR25J-E33K0
A23R2147	315-0103-00			RES,FXD,FILM:10K OHM,5%,0.25W	19701	5043CX10K00J
A23R2150	315-0152-00			RES,FXD,FILM:1.5K OHM,5%,0.25W	57668	NTR25J-E01K5
A23R2151	315-0153-00			RES,FXD,FILM:15K OHM,5%,0.25W	19701	5043CX15K00J
A23R2152	315-0474-00			RES,FXD,FILM:470K OHM,5%,0.25W	19701	5043CX470K0J92U
A23R2153	315-0151-00			RES,FXD,FILM:150 OHM,5%,0.25W	57668	NTR25J-E150E
A23R2154	315-0153-00			RES,FXD,FILM:15K OHM,5%,0.25W	19701	5043CX15K00J
A23R2155	315-0153-00			RES,FXD,FILM:15K OHM,5%,0.25W	19701	5043CX15K00J
A23R2160	315-0333-00			RES,FXD,FILM:33K OHM,5%,0.25W	57668	NTR25J-E33K0
A23R2161	315-0473-00			RES,FXD,FILM:47K OHM,5%,0.25W	57668	NTR25J-E47K0
A23R2162	321-0372-00			RES,FXD,FILM:73.2K OHM,1%,0.125W,TC=T0	07716	CEAD73201F
A23R2164	321-0397-00			RES,FXD,FILM:133K OHM,1%,0.125W,TC=T0	19701	5043ED133K0F
A23R2166	323-0481-00			RES,FXD,FILM:1 MEG OHM,1%,0.5W,TC=T0	75042	CECT0-1004F
A23R2167	323-0481-00			RES,FXD,FILM:1 MEG OHM,1%,0.5W,TC=T0	75042	CECT0-1004F
A23R2168	315-0155-00			RES,FXD,FILM:1.5M OHM,5%,0.25W	19701	5043CX1M500J
A23R2171	315-0473-00			RES,FXD,FILM:47K OHM,5%,0.25W	57668	NTR25J-E47K0
A23R2172	315-0103-00			RES,FXD,FILM:10K OHM,5%,0.25W	19701	5043CX10K00J
A23R2173	301-0824-00			RES,FXD,FILM:820K OHM,5%,0.5W	19701	5053CX820K0J
A23R2174	301-0824-00			RES,FXD,FILM:820K OHM,5%,0.5W	19701	5053CX820K0J
A23R2175	311-2266-00			RES,VAR,NONWW:TRMR,100K OHM,20%,0.5W	TK1450	GF06VT 100 K OHM
A23R2178	315-0474-00			RES,FXD,FILM:470K OHM,5%,0.25W	19701	5043CX470K0J92U
A23R2180	311-2262-00			RES,VAR,NONWW:TRMR,1M OHM,20%,0.5W	TK1450	GF06VT 1 M OHM
A23R2181	315-0474-00			RES,FXD,FILM:470K OHM,5%,0.25W	19701	5043CX470K0J92U
A23R2182	315-0223-00			RES,FXD,FILM:22K OHM,5%,0.25W	19701	5043CX22K00J92U
A23R2183	322-0377-00			RES,FXD,FILM:82.5K OHM,1%,0.25W,TC=T0	24546	NA60D8252F
A23R2187	321-0298-00			RES,FXD,FILM:12.4K OHM,1%,0.125W,TC=T0	07716	CEAD12401F
A23R2188	315-0473-00			RES,FXD,FILM:47K OHM,5%,0.25W	57668	NTR25J-E47K0
A23R2189	301-0304-00			RES,FXD,FILM:300K OHM,5%,0.5W	19701	5053CX300K0J
A23R2191	315-0221-00			RES,FXD,FILM:220 OHM,5%,0.25W	57668	NTR25J-E220E
A23R2192	301-0105-00			RES,FXD,FILM:1M OHM,5%,0.50W	19701	5053CX1M000J
A23R2193	301-0105-00			RES,FXD,FILM:1M OHM,5%,0.50W	19701	5053CX1M000J
A23R2194	303-0224-00			RES,FXD,CMPSN:220K OHM,5%,1W	01121	GB2245
A23R2196	303-0154-00			RES,FXD,CMPSN:150K OHM,5%,1W	24546	FP1 150K OHM 5%
A23R2197	301-0153-00			RES,FXD,FILM:15K OHM,5%,0.5W	19701	5053CX15K00J
A23R2198	315-0221-00			RES,FXD,FILM:220 OHM,5%,0.25W	57668	NTR25J-E220E
A23VR2133	152-0289-00			SEMICOND DVC,DI:ZEN,SI,180V,5%,0.4W,DO-7	04713	SZ12484KRL

http://manoman.sqhill.com

Component No.	Tektronix Part No.	Serial/Assembly No. Effective	Dscont	Name & Description	Mfr. Code	Mfr. Part No.
A25	670-9383-00			CIRCUIT BD ASSY:STORAGE	80009	670-9383-00
A25C2507	283-0187-00			CAP,FXD,CER DI:0.047UF,10%,400V	04222	SR308C473KAA
A25C2521	290-0778-00			CAP,FXD,ELCTLT:1UF,+50 -10%,50V,NPLZD	54473	ECE-A50N1
A25C2523	290-0778-00			CAP,FXD,ELCTLT:1UF,+50 -10%,50V,NPLZD	54473	ECE-A50N1
A25C2528	290-0778-00			CAP,FXD,ELCTLT:1UF,+50 -10%,50V,NPLZD	54473	ECE-A50N1
A25C2534	290-0114-00			CAP,FXD,ELCTLT:47UF,20%,6V	05397	T110B476M006AS
A25C2542	281-0775-00			CAP,FXD,CER DI:0.1UF,20%,50V	04222	MA205E104MAA
A25C2562	290-0297-00			CAP,FXD,ELCTLT:39UF,10%,10V	05397	T110B396K010AS
A25C2565	281-0850-00			CAP,FXD,CER DI:820PF,5%,50VDC	04222	MA101A821JAA
A25C2577	283-0187-00			CAP,FXD,CER DI:0.047UF,10%,400V	04222	SR308C473KAA
A25C2592	281-0826-00			CAP,FXD,CER DI:2200PF,5%,100V	20932	401EM100AD222K
A25C2594	290-0297-00			CAP,FXD,ELCTLT:39UF,10%,10V	05397	T110B396K010AS
A25C2608	283-0005-02			CAP,FXD,CER DI:0.01UF,+80%-20%,250V	54583	FK26Z5U2D103Z-T
A25C2626	283-0005-02			CAP,FXD,CER DI:0.01UF,+80%-20%,250V	54583	FK26Z5U2D103Z-T
A25C2662	283-0203-00			CAP,FXD,CER DI:0.47UF,20%,50V	04222	SR305SC474MAA
A25C2663	290-0778-00			CAP,FXD,ELCTLT:1UF,+50 -10%,50V,NPLZD	54473	ECE-A50N1
A25C2668	283-0177-00			CAP,FXD,CER DI:1UF,+80-20%,25V	04222	SR302E105ZAATR
A25C2671	283-0005-02			CAP,FXD,CER DI:0.01UF,+80%-20%,250V	54583	FK26Z5U2D103Z-T
A25C2676	290-0535-00			CAP,FXD,ELCTLT:33UF,20%,10V TANTALUM	56289	196D336X0010KA1
A25C2683	283-0005-02			CAP,FXD,CER DI:0.01UF,+80%-20%,250V	54583	FK26Z5U2D103Z-T
A25C2684	283-0005-02			CAP,FXD,CER DI:0.01UF,+80%-20%,250V	54583	FK26Z5U2D103Z-T
A25C2685	290-0114-00			CAP,FXD,ELCTLT:47UF,20%,6V	05397	T110B476M006AS
A25C2686	290-0530-00			CAP,FXD,ELCTLT:68UF,20%,6V	56289	196D686X0006KA1
A25C2696	290-0297-00			CAP,FXD,ELCTLT:39UF,10%,10V	05397	T110B396K010AS
A25C2718	281-0589-00			CAP,FXD,CER DI:170PF,5%,500V	52763	2RDPLZ007170PJK
A25C2753	290-0340-00			CAP,FXD,ELCTLT:10UF,10%,50V	56289	109D106X9050C2
A25C2770	290-0244-00			CAP,FXD,ELCTLT:0.47UF,5%,35V	56289	173D474X5035U
A25C2774	283-0150-00			CAP,FXD,CER DI:650PF,5%,200V	59821	2DDH60K651J
A25C2804	283-0005-02			CAP,FXD,CER DI:0.01UF,+80%-20%,250V	54583	FK26Z5U2D103Z-T
A25C2809	290-0778-00			CAP,FXD,ELCTLT:1UF,+50 -10%,50V,NPLZD	54473	ECE-A50N1
A25C2813	283-0005-02			CAP,FXD,CER DI:0.01UF,+80%-20%,250V	54583	FK26Z5U2D103Z-T
A25C2814	283-0005-02			CAP,FXD,CER DI:0.01UF,+80%-20%,250V	54583	FK26Z5U2D103Z-T
A25C2815	281-0627-00			CAP,FXD,CER DI:1PF,+/-0.25PF,500V	52763	2RDPLZ007 1P00CC
A25C2827	283-0631-00			CAP,FXD,MICA DI:95PF,1%,500V	00853	D155F950F0
A25C2833	290-0164-00			CAP,FXD,ELCTLT:1UF,+50-10%,150V	56289	500D105F150BA7
A25C2835	283-0631-00			CAP,FXD,MICA DI:95PF,1%,500V	00853	D155F950F0
A25C2839	283-0895-00			CAP,FXD,CER DI:0.033UF,20%,200V	04222	SR306C333MAATR
A25C2843	283-0107-00			CAP,FXD,CER DI:51PF,5%,200V	04222	SR206A510JAA
A25C2864	283-0005-02			CAP,FXD,CER DI:0.01UF,+80%-20%,250V	54583	FK26Z5U2D103Z-T
A25C2867	281-0775-00			CAP,FXD,CER DI:0.1UF,20%,50V	04222	MA205E104MAA
A25C2869	283-0000-00			CAP,FXD,CER DI:0.001UF,+100-0%,500V	59660	831-610-Y5U0102P
A25C2874	283-0057-00			CAP,FXD,CER DI:0.1UF,+80-20%,200V	04222	SR306E104ZAA
A25C2912	281-0762-00			CAP,FXD,CER DI:27PF,20%,100V	04222	MA101A270MAA
A25C2915	283-0000-00			CAP,FXD,CER DI:0.001UF,+100-0%,500V	59660	831-610-Y5U0102P
A25C2927	283-0895-00			CAP,FXD,CER DI:0.033UF,20%,200V	04222	SR306C333MAATR
A25C2948	283-0057-00			CAP,FXD,CER DI:0.1UF,+80-20%,200V	04222	SR306E104ZAA
A25C3053	290-0530-00			CAP,FXD,ELCTLT:68UF,20%,6V	56289	196D686X0006KA1
A25C3072	281-0775-00			CAP,FXD,CER DI:0.1UF,20%,50V	04222	MA205E104MAA
A25C3074	290-0944-00			CAP,FXD,ELCTLT:220UF,+50-10%,10V	55680	ULB1A221TPAANA
A25C3076	281-0775-00			CAP,FXD,CER DI:0.1UF,20%,50V	04222	MA205E104MAA
A25C3077	283-0005-02			CAP,FXD,CER DI:0.01UF,+80%-20%,250V	54583	FK26Z5U2D103Z-T
A25C3078	281-0775-00			CAP,FXD,CER DI:0.1UF,20%,50V	04222	MA205E104MAA
A25C3079	285-1077-00			CAP,FXD,PLASTIC:0.1UF,20%,600V	14752	230B1F104M
A25CR2514	152-0141-02			SEMICOND DVC,DI:SM,SI,30V,150MA,30V,DO-35	03508	DA2527 (1N4152)
A25CR2515	152-0141-02			SEMICOND DVC,DI:SM,SI,30V,150MA,30V,DO-35	03508	DA2527 (1N4152)
A25CR2526	152-0141-02			SEMICOND DVC,DI:SM,SI,30V,150MA,30V,DO-35	03508	DA2527 (1N4152)
A25CR2528	152-0141-02			SEMICOND DVC,DI:SM,SI,30V,150MA,30V,DO-35	03508	DA2527 (1N4152)
A25CR2535	152-0141-02			SEMICOND DVC,DI:SM,SI,30V,150MA,30V,DO-35	03508	DA2527 (1N4152)
A25CR2542	152-0141-02			SEMICOND DVC,DI:SM,SI,30V,150MA,30V,DO-35	03508	DA2527 (1N4152)

http://manoman.sqhill.com

Component No.	Tektronix Part No.	Serial/Assembly No. Effective	Dscont	Name & Description	Mfr. Code	Mfr. Part No.
A25CR2551	152-0141-02			SEMICOND DVC,DI:SW,SI,30V,150MA,30V,DO-35	03508	DA2527 (1N4152)
A25CR2552	152-0141-02			SEMICOND DVC,DI:SW,SI,30V,150MA,30V,DO-35	03508	DA2527 (1N4152)
A25CR2553	152-0141-02			SEMICOND DVC,DI:SW,SI,30V,150MA,30V,DO-35	03508	DA2527 (1N4152)
A25CR2554	152-0141-02			SEMICOND DVC,DI:SW,SI,30V,150MA,30V,DO-35	03508	DA2527 (1N4152)
A25CR2555	152-0141-02			SEMICOND DVC,DI:SW,SI,30V,150MA,30V,DO-35	03508	DA2527 (1N4152)
A25CR2564	152-0141-02			SEMICOND DVC,DI:SW,SI,30V,150MA,30V,DO-35	03508	DA2527 (1N4152)
A25CR2565	152-0141-02			SEMICOND DVC,DI:SW,SI,30V,150MA,30V,DO-35	03508	DA2527 (1N4152)
A25CR2582	152-0141-02			SEMICOND DVC,DI:SW,SI,30V,150MA,30V,DO-35	03508	DA2527 (1N4152)
A25CR2610	152-0141-02			SEMICOND DVC,DI:SW,SI,30V,150MA,30V,DO-35	03508	DA2527 (1N4152)
A25CR2611	152-0141-02			SEMICOND DVC,DI:SW,SI,30V,150MA,30V,DO-35	03508	DA2527 (1N4152)
A25CR2612	152-0141-02			SEMICOND DVC,DI:SW,SI,30V,150MA,30V,DO-35	03508	DA2527 (1N4152)
A25CR2613	152-0141-02			SEMICOND DVC,DI:SW,SI,30V,150MA,30V,DO-35	03508	DA2527 (1N4152)
A25CR2614	152-0141-02			SEMICOND DVC,DI:SW,SI,30V,150MA,30V,DO-35	03508	DA2527 (1N4152)
A25CR2615	152-0141-02			SEMICOND DVC,DI:SW,SI,30V,150MA,30V,DO-35	03508	DA2527 (1N4152)
A25CR2626	152-0141-02			SEMICOND DVC,DI:SW,SI,30V,150MA,30V,DO-35	03508	DA2527 (1N4152)
A25CR2643	152-0141-02			SEMICOND DVC,DI:SW,SI,30V,150MA,30V,DO-35	03508	DA2527 (1N4152)
A25CR2644	152-0141-02			SEMICOND DVC,DI:SW,SI,30V,150MA,30V,DO-35	03508	DA2527 (1N4152)
A25CR2646	152-0141-02			SEMICOND DVC,DI:SW,SI,30V,150MA,30V,DO-35	03508	DA2527 (1N4152)
A25CR2663	152-0664-00			SEMICOND DVC,DI:SCHOTTKY,SW,SI,70V,DO-35	80009	152-0664-00
A25CR2664	152-0141-02			SEMICOND DVC,DI:SW,SI,30V,150MA,30V,DO-35	03508	DA2527 (1N4152)
A25CR2686	152-0141-02			SEMICOND DVC,DI:SW,SI,30V,150MA,30V,DO-35	03508	DA2527 (1N4152)
A25CR2687	152-0141-02			SEMICOND DVC,DI:SW,SI,30V,150MA,30V,DO-35	03508	DA2527 (1N4152)
A25CR2704	152-0141-02			SEMICOND DVC,DI:SW,SI,30V,150MA,30V,DO-35	03508	DA2527 (1N4152)
A25CR2705	152-0141-02			SEMICOND DVC,DI:SW,SI,30V,150MA,30V,DO-35	03508	DA2527 (1N4152)
A25CR2706	152-0141-02			SEMICOND DVC,DI:SW,SI,30V,150MA,30V,DO-35	03508	DA2527 (1N4152)
A25CR2707	152-0141-02			SEMICOND DVC,DI:SW,SI,30V,150MA,30V,DO-35	03508	DA2527 (1N4152)
A25CR2708	152-0141-02			SEMICOND DVC,DI:SW,SI,30V,150MA,30V,DO-35	03508	DA2527 (1N4152)
A25CR2709	152-0141-02			SEMICOND DVC,DI:SW,SI,30V,150MA,30V,DO-35	03508	DA2527 (1N4152)
A25CR2710	152-0141-02			SEMICOND DVC,DI:SW,SI,30V,150MA,30V,DO-35	03508	DA2527 (1N4152)
A25CR2721	152-0141-02			SEMICOND DVC,DI:SW,SI,30V,150MA,30V,DO-35	03508	DA2527 (1N4152)
A25CR2722	152-0141-02			SEMICOND DVC,DI:SW,SI,30V,150MA,30V,DO-35	03508	DA2527 (1N4152)
A25CR2723	152-0141-02			SEMICOND DVC,DI:SW,SI,30V,150MA,30V,DO-35	03508	DA2527 (1N4152)
A25CR2724	152-0141-02			SEMICOND DVC,DI:SW,SI,30V,150MA,30V,DO-35	03508	DA2527 (1N4152)
A25CR2725	152-0141-02			SEMICOND DVC,DI:SW,SI,30V,150MA,30V,DO-35	03508	DA2527 (1N4152)
A25CR2726	152-0141-02			SEMICOND DVC,DI:SW,SI,30V,150MA,30V,DO-35	03508	DA2527 (1N4152)
A25CR2737	152-0141-02			SEMICOND DVC,DI:SW,SI,30V,150MA,30V,DO-35	03508	DA2527 (1N4152)
A25CR2743	152-0141-02			SEMICOND DVC,DI:SW,SI,30V,150MA,30V,DO-35	03508	DA2527 (1N4152)
A25CR2774	152-0141-02			SEMICOND DVC,DI:SW,SI,30V,150MA,30V,DO-35	03508	DA2527 (1N4152)
A25CR2813	150-1036-00			LT EMITTING DIO:RED,650NM,40MA MAX	58361	Q6878/MV5074C
A25CR2814	152-0141-02			SEMICOND DVC,DI:SW,SI,30V,150MA,30V,DO-35	03508	DA2527 (1N4152)
A25CR2825	152-0141-02			SEMICOND DVC,DI:SW,SI,30V,150MA,30V,DO-35	03508	DA2527 (1N4152)
A25CR2826	152-0141-02			SEMICOND DVC,DI:SW,SI,30V,150MA,30V,DO-35	03508	DA2527 (1N4152)
A25CR2828	152-0040-00			SEMICOND DVC,DI:RECT,SI,600V,1A,DO-41	80009	152-0040-00
A25CR2831	150-1036-00			LT EMITTING DIO:RED,650NM,40MA MAX	58361	Q6878/MV5074C
A25CR2833	152-0040-00			SEMICOND DVC,DI:RECT,SI,600V,1A,DO-41	80009	152-0040-00
A25CR2834	152-0141-02			SEMICOND DVC,DI:SW,SI,30V,150MA,30V,DO-35	03508	DA2527 (1N4152)
A25CR2839	152-0040-00			SEMICOND DVC,DI:RECT,SI,600V,1A,DO-41	80009	152-0040-00
A25CR2848	152-0141-02			SEMICOND DVC,DI:SW,SI,30V,150MA,30V,DO-35	03508	DA2527 (1N4152)
A25CR2849	152-0141-02			SEMICOND DVC,DI:SW,SI,30V,150MA,30V,DO-35	03508	DA2527 (1N4152)
A25CR2874	152-0141-02			SEMICOND DVC,DI:SW,SI,30V,150MA,30V,DO-35	03508	DA2527 (1N4152)
A25CR2876	152-0040-00			SEMICOND DVC,DI:RECT,SI,600V,1A,DO-41	80009	152-0040-00
A25CR2902	152-0141-02			SEMICOND DVC,DI:SW,SI,30V,150MA,30V,DO-35	03508	DA2527 (1N4152)
A25CR2904	152-0141-02			SEMICOND DVC,DI:SW,SI,30V,150MA,30V,DO-35	03508	DA2527 (1N4152)
A25CR2905	152-0141-02			SEMICOND DVC,DI:SW,SI,30V,150MA,30V,DO-35	03508	DA2527 (1N4152)
A25CR2924	152-0141-02			SEMICOND DVC,DI:SW,SI,30V,150MA,30V,DO-35	03508	DA2527 (1N4152)
A25CR2951	152-0141-02			SEMICOND DVC,DI:SW,SI,30V,150MA,30V,DO-35	03508	DA2527 (1N4152)
A25CR2953	152-0141-02			SEMICOND DVC,DI:SW,SI,30V,150MA,30V,DO-35	03508	DA2527 (1N4152)
A25CR2954	152-0141-02			SEMICOND DVC,DI:SW,SI,30V,150MA,30V,DO-35	03508	DA2527 (1N4152)
A25CR2955	152-0141-02			SEMICOND DVC,DI:SW,SI,30V,150MA,30V,DO-35	03508	DA2527 (1N4152)

http://manoman.sqhill.com

Component No.	Tektronix Part No.	Serial/Assembly No. Effective	Dscont	Name & Description	Mfr. Code	Mfr. Part No.
A25CR2962	152-0141-02			SEMICOND DVC,DI:SW,SI,30V,150MA,30V,DO-35	03508	DA2527 (1N4152)
A25CR2966	152-0141-02			SEMICOND DVC,DI:SW,SI,30V,150MA,30V,DO-35	03508	DA2527 (1N4152)
A25CR2980	152-0141-02			SEMICOND DVC,DI:SW,SI,30V,150MA,30V,DO-35	03508	DA2527 (1N4152)
A25CR2981	152-0141-02			SEMICOND DVC,DI:SW,SI,30V,150MA,30V,DO-35	03508	DA2527 (1N4152)
A25CR3015	152-0141-02			SEMICOND DVC,DI:SW,SI,30V,150MA,30V,DO-35	03508	DA2527 (1N4152)
A25CR3017	152-0141-02			SEMICOND DVC,DI:SW,SI,30V,150MA,30V,DO-35	03508	DA2527 (1N4152)
A25CR3049	152-0141-02			SEMICOND DVC,DI:SW,SI,30V,150MA,30V,DO-35	03508	DA2527 (1N4152)
A25CR3052	152-0141-02			SEMICOND DVC,DI:SW,SI,30V,150MA,30V,DO-35	03508	DA2527 (1N4152)
A25CR3053	152-0141-02			SEMICOND DVC,DI:SW,SI,30V,150MA,30V,DO-35	03508	DA2527 (1N4152)
A25CR3056	152-0141-02			SEMICOND DVC,DI:SW,SI,30V,150MA,30V,DO-35	03508	DA2527 (1N4152)
A25CR3061	152-0141-02			SEMICOND DVC,DI:SW,SI,30V,150MA,30V,DO-35	03508	DA2527 (1N4152)
A25CR3062	152-0141-02			SEMICOND DVC,DI:SW,SI,30V,150MA,30V,DO-35	03508	DA2527 (1N4152)
A25CR3066	152-0061-00			SEMICOND DVC,DI:SW,SI,175V,0.1A,DO-35	07263	FDH2161
A25CR3077	152-0141-02			SEMICOND DVC,DI:SW,SI,30V,150MA,30V,DO-35	03508	DA2527 (1N4152)
A25L3072	108-1251-00			COIL,RF:FXD,2.7UH,10%	54583	SPT 0406-2R7K-6
A25L3074	108-1251-00			COIL,RF:FXD,2.7UH,10%	54583	SPT 0406-2R7K-6
A25L3076	108-1251-00			COIL,RF:FXD,2.7UH,10%	54583	SPT 0406-2R7K-6
A25Q2202	151-0192-00			TRANSISTOR:SELECTED	04713	SPS8801
A25Q2502	151-0432-00			TRANSISTOR:NPN,SI,TO-106	04713	SP58512
A25Q2506	151-0432-00			TRANSISTOR:NPN,SI,TO-106	04713	SP58512
A25Q2508	151-0192-00			TRANSISTOR:SELECTED	04713	SPS8801
A25Q2514	151-0164-00			TRANSISTOR:PNP,SI,TO-92	04713	2N2907A
A25Q2526	151-0192-00			TRANSISTOR:SELECTED	04713	SPS8801
A25Q2528	151-0192-00			TRANSISTOR:SELECTED	04713	SPS8801
A25Q2532	151-0192-00			TRANSISTOR:SELECTED	04713	SPS8801
A25Q2536	151-0164-00			TRANSISTOR:PNP,SI,TO-92	04713	2N2907A
A25Q2538	151-0508-00			TRANSISTOR:UJT,SI,TO-98	03508	X13T520
A25Q2542	151-0192-00			TRANSISTOR:SELECTED	04713	SPS8801
A25Q2572	151-0432-00			TRANSISTOR:NPN,SI,TO-106	04713	SP58512
A25Q2576	151-0432-00			TRANSISTOR:NPN,SI,TO-106	04713	SP58512
A25Q2578	151-0192-00			TRANSISTOR:SELECTED	04713	SPS8801
A25Q2584	151-0223-00			TRANSISTOR:NPN,SI,TO-92	04713	SPS8026
A25Q2586	151-0223-00			TRANSISTOR:NPN,SI,TO-92	04713	SPS8026
A25Q2588	151-0164-00			TRANSISTOR:PNP,SI,TO-92	04713	2N2907A
A25Q2612	151-0164-00			TRANSISTOR:PNP,SI,TO-92	04713	2N2907A
A25Q2626	151-0192-00			TRANSISTOR:SELECTED	04713	SPS8801
A25Q2632	151-0192-00			TRANSISTOR:SELECTED	04713	SPS8801
A25Q2642	151-0192-00			TRANSISTOR:SELECTED	04713	SPS8801
A25Q2644	151-0164-00			TRANSISTOR:PNP,SI,TO-92	04713	2N2907A
A25Q2654	151-0192-00			TRANSISTOR:SELECTED	04713	SPS8801
A25Q2658	151-0192-00			TRANSISTOR:SELECTED	04713	SPS8801
A25Q2664	151-0192-00			TRANSISTOR:SELECTED	04713	SPS8801
A25Q2668	151-0192-00			TRANSISTOR:SELECTED	04713	SPS8801
A25Q2674	151-0192-00			TRANSISTOR:SELECTED	04713	SPS8801
A25Q2678	151-0192-00			TRANSISTOR:SELECTED	04713	SPS8801
A25Q2686	151-0164-00			TRANSISTOR:PNP,SI,TO-92	04713	2N2907A
A25Q2688	151-0164-00			TRANSISTOR:PNP,SI,TO-92	04713	2N2907A
A25Q2694	151-0192-00			TRANSISTOR:SELECTED	04713	SPS8801
A25Q2704	151-0192-00			TRANSISTOR:SELECTED	04713	SPS8801
A25Q2714	151-0192-00			TRANSISTOR:SELECTED	04713	SPS8801
A25Q2730	151-0164-00			TRANSISTOR:PNP,SI,TO-92	04713	2N2907A
A25Q2734	151-0164-00			TRANSISTOR:PNP,SI,TO-92	04713	2N2907A
A25Q2745	151-0164-00			TRANSISTOR:PNP,SI,TO-92	04713	2N2907A
A25Q2752	151-0164-00			TRANSISTOR:PNP,SI,TO-92	04713	2N2907A
A25Q2755	151-0164-00			TRANSISTOR:PNP,SI,TO-92	04713	2N2907A
A25Q2772	151-0508-00			TRANSISTOR:UJT,SI,TO-98	03508	X13T520
A25Q2774	151-0508-00			TRANSISTOR:UJT,SI,TO-98	03508	X13T520
A25Q2784	151-0164-00			TRANSISTOR:PNP,SI,TO-92	04713	2N2907A
A25Q2788	151-0164-00			TRANSISTOR:PNP,SI,TO-92	04713	2N2907A

http://manoman.sqhill.com

Component No.	Tektronix Part No.	Serial/Assembly No. Effective	Dscont	Name & Description	Mfr. Code	Mfr. Part No.
A25Q2802	151-0453-00			TRANSISTOR:PNP,SI,TO-92	27014	ORDER BY DESCR
A25Q2804	151-0453-00			TRANSISTOR:PNP,SI,TO-92	27014	ORDER BY DESCR
A25Q2808	151-0347-02			TRANSISTOR:NPN,SI,TO-92	56289	CT7916(AMMOPACK)
A25Q2814	151-0444-00			TRANSISTOR:NPN,SI,TO-92	04713	SPS797
A25Q2818	151-0164-00			TRANSISTOR:PNP,SI,TO-92	04713	2N2907A
A25Q2822	151-0444-00			TRANSISTOR:NPN,SI,TO-92	04713	SPS797
A25Q2826	151-0444-03			TRANSISTOR:NPN,SI,TO-92,SCREENED	TK0271	151-0444-00
A25Q2828	151-0444-03			TRANSISTOR:NPN,SI,TO-92,SCREENED	TK0271	151-0444-00
A25Q2834	151-0444-03			TRANSISTOR:NPN,SI,TO-92,SCREENED	TK0271	151-0444-00
A25Q2838	151-0444-03			TRANSISTOR:NPN,SI,TO-92,SCREENED	TK0271	151-0444-00
A25Q2842	151-0192-00			TRANSISTOR:SELECTED	04713	SPS8801
A25Q2852	151-0164-00			TRANSISTOR:PNP,SI,TO-92	04713	2N2907A
A25Q2862	151-0453-00			TRANSISTOR:PNP,SI,TO-92	27014	ORDER BY DESCR
A25Q2864	151-0453-00			TRANSISTOR:PNP,SI,TO-92	27014	ORDER BY DESCR
A25Q2868	151-0347-02			TRANSISTOR:NPN,SI,TO-92	56289	CT7916(AMMOPACK)
A25Q2873	151-0443-00			TRANSISTOR:PNP,SI,TO-92	04713	SPS7950
A25Q2874	151-0347-02			TRANSISTOR:NPN,SI,TO-92	56289	CT7916(AMMOPACK)
A25Q2904	151-0192-00			TRANSISTOR:SELECTED	04713	SPS8801
A25Q2914	151-0453-00			TRANSISTOR:PNP,SI,TO-92	27014	ORDER BY DESCR
A25Q2918	151-0347-02			TRANSISTOR:NPN,SI,TO-92	56289	CT7916(AMMOPACK)
A25Q2924	151-0347-02			TRANSISTOR:NPN,SI,TO-92	56289	CT7916(AMMOPACK)
A25Q2942	151-0453-00			TRANSISTOR:PNP,SI,TO-92	27014	ORDER BY DESCR
A25Q2946	151-0347-02			TRANSISTOR:NPN,SI,TO-92	56289	CT7916(AMMOPACK)
A25Q2966	151-0453-00			TRANSISTOR:PNP,SI,TO-92	27014	ORDER BY DESCR
A25Q2972	151-0453-00			TRANSISTOR:PNP,SI,TO-92	27014	ORDER BY DESCR
A25Q2976	151-0347-02			TRANSISTOR:NPN,SI,TO-92	56289	CT7916(AMMOPACK)
A25Q2988	151-0192-00			TRANSISTOR:SELECTED	04713	SPS8801
A25Q2992	151-0453-00			TRANSISTOR:PNP,SI,TO-92	27014	ORDER BY DESCR
A25Q2996	151-0347-02			TRANSISTOR:NPN,SI,TO-92	56289	CT7916(AMMOPACK)
A25Q3012	151-0192-00			TRANSISTOR:SELECTED	04713	SPS8801
A25Q3016	151-0192-00			TRANSISTOR:SELECTED	04713	SPS8801
A25Q3022	151-0453-00			TRANSISTOR:PNP,SI,TO-92	27014	ORDER BY DESCR
A25Q3026	151-0347-02			TRANSISTOR:NPN,SI,TO-92	56289	CT7916(AMMOPACK)
A25Q3048	151-0347-02			TRANSISTOR:NPN,SI,TO-92	56289	CT7916(AMMOPACK)
A25Q3054	151-0192-00			TRANSISTOR:SELECTED	04713	SPS8801
A25Q3064	151-0347-02			TRANSISTOR:NPN,SI,TO-92	56289	CT7916(AMMOPACK)
A25R2200	315-0472-00			RES,FXD,FILM:4.7K OHM,5%,0.25W	57668	NTR25J-E04K7
A25R2201	321-0306-00			RES,FXD,FILM:15.0K OHM,1%,0.125W,TC=T0	19701	5033ED15J00F
A25R2202	321-0300-00			RES,FXD,FILM:13.0K OHM,1%,0.125W,TC=T0	07716	CEAD13001F
A25R2501	315-0471-00			RES,FXD,FILM:470 OHM,5%,0.25W	57668	NTR25J-E470E
A25R2502	315-0202-00			RES,FXD,FILM:2K OHM,5%,0.25W	57668	NTR25J-E 2K
A25R2506	315-0103-00			RES,FXD,FILM:10K OHM,5%,0.25W	19701	5043CX10K00J
A25R2507	321-0360-00			RES,FXD,FILM:54.9K OHM,1%,0.125W,TC=T0	19701	5033ED54K90F
A25R2508	315-0103-00			RES,FXD,FILM:10K OHM,5%,0.25W	19701	5043CX10K00J
A25R2509	315-0203-00			RES,FXD,FILM:20K OHM,5%,0.25W	57668	NTR25J-E 20K
A25R2511	315-0271-00			RES,FXD,FILM:270 OHM,5%,0.25W	57668	NTR25J-E270E
A25R2512	315-0273-00			RES,FXD,FILM:27K OHM,5%,0.25W	57668	NTR25J-E27K0
A25R2513	315-0104-00			RES,FXD,FILM:100K OHM,5%,0.25W	57668	NTR25J-E100K
A25R2516	315-0103-00			RES,FXD,FILM:10K OHM,5%,0.25W	19701	5043CX10K00J
A25R2517	315-0103-00			RES,FXD,FILM:10K OHM,5%,0.25W	19701	5043CX10K00J
A25R2518	315-0154-00			RES,FXD,FILM:150K OHM,5%,0.25W	57668	NTR25J-E150K
A25R2521	315-0203-00			RES,FXD,FILM:20K OHM,5%,0.25W	57668	NTR25J-E 20K
A25R2522	315-0333-00			RES,FXD,FILM:33K OHM,5%,0.25W	57668	NTR25J-E33K0
A25R2523	315-0333-00			RES,FXD,FILM:33K OHM,5%,0.25W	57668	NTR25J-E33K0
A25R2526	315-0333-00			RES,FXD,FILM:33K OHM,5%,0.25W	57668	NTR25J-E33K0
A25R2527	315-0123-00			RES,FXD,FILM:12K OHM,5%,0.25W	57668	NTR25J-E12K0
A25R2528	315-0203-00			RES,FXD,FILM:20K OHM,5%,0.25W	57668	NTR25J-E 20K
A25R2529	315-0123-00			RES,FXD,FILM:12K OHM,5%,0.25W	57668	NTR25J-E12K0
A25R2531	315-0203-00			RES,FXD,FILM:20K OHM,5%,0.25W	57668	NTR25J-E 20K

http://manoman.sqhill.com

Component No.	Tektronix Part No.	Serial/Assembly No. Effective	Dscont	Name & Description	Mfr. Code	Mfr. Part No.
A25R2532	315-0203-00			RES,FXD,FILM:20K OHM,5%,0.25W	57668	NTR25J-E 20K
A25R2533	315-0271-00			RES,FXD,FILM:270 OHM,5%,0.25W	57668	NTR25J-E270E
A25R2534	315-0914-00			RES,FXD,FILM:910K OHM,5%,0.25W	19701	5043CX910K00J
A25R2535	315-0273-00			RES,FXD,FILM:27K OHM,5%,0.25W	57668	NTR25J-E27K0
A25R2536	321-0347-00			RES,FXD,FILM:40.2K OHM,1%,0.125W,TC=T0	91637	CMF55116G40201F
A25R2538	321-0337-00			RES,FXD,FILM:31.6K OHM,1%,0.125W,TC=T0	07716	CEAD31601F
A25R2539	321-0285-00			RES,FXD,FILM:9.09K OHM,1%,0.125W,TC=T0	07716	CEAD90900F
A25R2540	315-0470-00			RES,FXD,FILM:47 OHM,5%,0.25W	57668	NTR25J-E47E0
A25R2542	315-0103-00			RES,FXD,FILM:10K OHM,5%,0.25W	19701	5043CX10K00J
A25R2556	315-0102-00			RES,FXD,FILM:1K OHM,5%,0.25W	57668	NTR25JE01K0
A25R2558	301-0681-00			RES,FXD,FILM:680 OHM,5%,0.5W	19701	5053CX680R0J
A25R2562	321-0283-00			RES,FXD,FILM:8.66K OHM,1%,0.125W,TC=T0	19701	5043ED8K660F
A25R2563	315-0471-00			RES,FXD,FILM:470 OHM,5%,0.25W	57668	NTR25J-E470E
A25R2564	315-0302-00			RES,FXD,FILM:3K OHM,5%,0.25W	57668	NTR25J-E03K0
A25R2565	321-0275-00			RES,FXD,FILM:7.15K OHM,1%,0.125W,TC=T0	07716	CEAD71500F
A25R2566	315-0471-00			RES,FXD,FILM:470 OHM,5%,0.25W	57668	NTR25J-E470E
A25R2571	315-0471-00			RES,FXD,FILM:470 OHM,5%,0.25W	57668	NTR25J-E470E
A25R2572	315-0202-00			RES,FXD,FILM:2K OHM,5%,0.25W	57668	NTR25J-E 2K
A25R2576	315-0103-00			RES,FXD,FILM:10K OHM,5%,0.25W	19701	5043CX10K00J
A25R2577	321-0433-00			RES,FXD,FILM:316K OHM,1%,0.125W,TC=T0	07716	CEAD31602F
A25R2578	315-0103-00			RES,FXD,FILM:10K OHM,5%,0.25W	19701	5043CX10K00J
A25R2579	315-0271-00			RES,FXD,FILM:270 OHM,5%,0.25W	57668	NTR25J-E270E
A25R2581	315-0204-00			RES,FXD,FILM:200K OHM,5%,0.25W	19701	5043CX200K0J
A25R2582	315-0102-00			RES,FXD,FILM:1K OHM,5%,0.25W	57668	NTR25JE01K0
A25R2584	315-0392-00			RES,FXD,FILM:3.9K OHM,5%,0.25W	57668	NTR25J-E03K9
A25R2585	315-0102-00			RES,FXD,FILM:1K OHM,5%,0.25W	57668	NTR25JE01K0
A25R2586	315-0302-00			RES,FXD,FILM:3K OHM,5%,0.25W	57668	NTR25J-E03K0
A25R2587	315-0473-00			RES,FXD,FILM:47K OHM,5%,0.25W	57668	NTR25J-E47K0
A25R2588	315-0391-00			RES,FXD,FILM:390 OHM,5%,0.25W	57668	NTR25J-E390E
A25R2593	315-0102-00			RES,FXD,FILM:1K OHM,5%,0.25W	57668	NTR25JE01K0
A25R2594	321-0283-00			RES,FXD,FILM:8.66K OHM,1%,0.125W,TC=T0	19701	5043ED8K660F
A25R2595	315-0361-00			RES,FXD,FILM:360 OHM,5%,0.25W	19701	5043CX360R0J
A25R2604	315-0102-00			RES,FXD,FILM:1K OHM,5%,0.25W	57668	NTR25JE01K0
A25R2605	315-0151-00			RES,FXD,FILM:150 OHM,5%,0.25W	57668	NTR25J-E150E
A25R2606	315-0102-00			RES,FXD,FILM:1K OHM,5%,0.25W	57668	NTR25JE01K0
A25R2607	315-0102-00			RES,FXD,FILM:1K OHM,5%,0.25W	57668	NTR25JE01K0
A25R2608	315-0822-00			RES,FXD,FILM:8.2K OHM,5%,0.25W	19701	5043CX8K200J
A25R2609	315-0102-00			RES,FXD,FILM:1K OHM,5%,0.25W	57668	NTR25JE01K0
A25R2610	315-0102-00			RES,FXD,FILM:1K OHM,5%,0.25W	57668	NTR25JE01K0
A25R2611	315-0753-00			RES,FXD,FILM:75K OHM,5%,0.25W	57668	NTR25J-E75K0
A25R2612	315-0753-00			RES,FXD,FILM:75K OHM,5%,0.25W	57668	NTR25J-E75K0
A25R2613	321-0390-00			RES,FXD,FILM:113K OHM,1%,0.125W,TC=T0	07716	CEAD11302F
A25R2614	315-0472-00			RES,FXD,FILM:4.7K OHM,5%,0.25W	57668	NTR25J-E04K7
A25R2615	315-0472-00			RES,FXD,FILM:4.7K OHM,5%,0.25W	57668	NTR25J-E04K7
A25R2622	315-0203-00			RES,FXD,FILM:20K OHM,5%,0.25W	57668	NTR25J-E 20K
A25R2623	315-0203-00			RES,FXD,FILM:20K OHM,5%,0.25W	57668	NTR25J-E 20K
A25R2624	315-0203-00			RES,FXD,FILM:20K OHM,5%,0.25W	57668	NTR25J-E 20K
A25R2626	315-0622-00			RES,FXD,FILM:6.2K OHM,5%,0.25W	19701	5043CX6K200J
A25R2631	315-0131-00			RES,FXD,FILM:130 OHM,5%,0.25W	19701	5043CX130R0J
A25R2632	315-0202-00			RES,FXD,FILM:2K OHM,5%,0.25W	57668	NTR25J-E 2K
A25R2634	315-0822-00			RES,FXD,FILM:8.2K OHM,5%,0.25W	19701	5043CX8K200J
A25R2641	315-0104-00			RES,FXD,FILM:100K OHM,5%,0.25W	57668	NTR25J-E100K
A25R2642	315-0392-00			RES,FXD,FILM:3.9K OHM,5%,0.25W	57668	NTR25J-E03K9
A25R2643	315-0472-00			RES,FXD,FILM:4.7K OHM,5%,0.25W	57668	NTR25J-E04K7
A25R2644	315-0302-00			RES,FXD,FILM:3K OHM,5%,0.25W	57668	NTR25J-E03K0
A25R2646	315-0152-00			RES,FXD,FILM:1.5K OHM,5%,0.25W	57668	NTR25J-E01K5
A25R2651	315-0103-00			RES,FXD,FILM:10K OHM,5%,0.25W	19701	5043CX10K00J
A25R2652	315-0103-00			RES,FXD,FILM:10K OHM,5%,0.25W	19701	5043CX10K00J
A25R2653	315-0103-00			RES,FXD,FILM:10K OHM,5%,0.25W	19701	5043CX10K00J

http://manoman.sqhill.com

Component No.	Tektronix Part No.	Serial/Assembly No. Effective	Dscont	Name & Description	Mfr. Code	Mfr. Part No.
A25R2654	315-0472-00			RES,FXD,FILM:4.7K OHM,5%,0.25W	57668	NTR25J-E04K7
A25R2655	315-0203-00			RES,FXD,FILM:20K OHM,5%,0.25W	57668	NTR25J-E 20K
A25R2656	315-0203-00			RES,FXD,FILM:20K OHM,5%,0.25W	57668	NTR25J-E 20K
A25R2657	315-0203-00			RES,FXD,FILM:20K OHM,5%,0.25W	57668	NTR25J-E 20K
A25R2658	315-0202-00			RES,FXD,FILM:2K OHM,5%,0.25W	57668	NTR25J-E 2K
A25R2662	315-0202-00			RES,FXD,FILM:2K OHM,5%,0.25W	57668	NTR25J-E 2K
A25R2663	315-0203-00			RES,FXD,FILM:20K OHM,5%,0.25W	57668	NTR25J-E 20K
A25R2664	315-0104-00			RES,FXD,FILM:100K OHM,5%,0.25W	57668	NTR25J-E100K
A25R2668	315-0103-00			RES,FXD,FILM:10K OHM,5%,0.25W	19701	5043CX10K00J
A25R2671	315-0472-00			RES,FXD,FILM:4.7K OHM,5%,0.25W	57668	NTR25J-E04K7
A25R2672	315-0103-00			RES,FXD,FILM:10K OHM,5%,0.25W	19701	5043CX10K00J
A25R2673	315-0103-00			RES,FXD,FILM:10K OHM,5%,0.25W	19701	5043CX10K00J
A25R2674	315-0202-00			RES,FXD,FILM:2K OHM,5%,0.25W	57668	NTR25J-E 2K
A25R2675	315-0751-00			RES,FXD,FILM:750 OHM,5%,0.25W	57668	NTR25J-E750E
A25R2676	321-0277-00			RES,FXD,FILM:7.50K OHM,1%,0.125W,TC=T0	24546	NA55D7501F
A25R2678	315-0203-00			RES,FXD,FILM:20K OHM,5%,0.25W	57668	NTR25J-E 20K
A25R2680	315-0471-00			RES,FXD,FILM:470 OHM,5%,0.25W	57668	NTR25J-E470E
A25R2681	315-0751-00			RES,FXD,FILM:750 OHM,5%,0.25W	57668	NTR25J-E750E
A25R2682	315-0472-00			RES,FXD,FILM:4.7K OHM,5%,0.25W	57668	NTR25J-E04K7
A25R2683	315-0432-00			RES,FXD,FILM:4.3K OHM,5%,0.25W	57668	NTR25J-E04K3
A25R2684	315-0822-00			RES,FXD,FILM:8.2K OHM,5%,0.25W	19701	5043CX8K200J
A25R2685	321-0337-00			RES,FXD,FILM:31.6K OHM,1%,0.125W,TC=T0	07716	CEAD31601F
A25R2686	315-0103-00			RES,FXD,FILM:10K OHM,5%,0.25W	19701	5043CX10K00J
A25R2687	315-0103-00			RES,FXD,FILM:10K OHM,5%,0.25W	19701	5043CX10K00J
A25R2688	315-0103-00			RES,FXD,FILM:10K OHM,5%,0.25W	19701	5043CX10K00J
A25R2689	315-0474-00			RES,FXD,FILM:470K OHM,5%,0.25W	19701	5043CX470K0J92U
A25R2691	315-0752-00			RES,FXD,FILM:7.5K OHM,5%,0.25W	57668	NTR25J-E07K5
A25R2692	315-0752-00			RES,FXD,FILM:7.5K OHM,5%,0.25W	57668	NTR25J-E07K5
A25R2693	315-0752-00			RES,FXD,FILM:7.5K OHM,5%,0.25W	57668	NTR25J-E07K5
A25R2694	315-0103-00			RES,FXD,FILM:10K OHM,5%,0.25W	19701	5043CX10K00J
A25R2696	321-0283-00			RES,FXD,FILM:8.66K OHM,1%,0.125W,TC=T0	19701	5043ED8K660F
A25R2701	321-0248-00			RES,FXD,FILM:3.74K OHM,1%,0.125W,TC=T0	19701	5043ED3K740F
A25R2702	315-0622-00			RES,FXD,FILM:6.2K OHM,5%,0.25W	19701	5043CX6K200J
A25R2703	315-0622-00			RES,FXD,FILM:6.2K OHM,5%,0.25W	19701	5043CX6K200J
A25R2705	311-2237-00			RES,VAR,NONWW:TRMR,25K OHM,20%,0.5W LINEAR	TK1450	GF06U
A25R2706	321-0383-00			RES,FXD,FILM:95.3K OHM,1%,0.125W,TC=T0	07716	CEAD95301F
A25R2708	315-0153-00			RES,FXD,FILM:15K OHM,5%,0.25W	19701	5043CX15K00J
A25R2709	321-0375-00			RES,FXD,FILM:78.7K OHM,1%,0.125W,TC=T0	07716	CEAD78701F
A25R2711	315-0203-00			RES,FXD,FILM:20K OHM,5%,0.25W	57668	NTR25J-E 20K
A25R2712	315-0203-00			RES,FXD,FILM:20K OHM,5%,0.25W	57668	NTR25J-E 20K
A25R2713	315-0393-00			RES,FXD,FILM:39K OHM,5%,0.25W	57668	NTR25J-E39K0
A25R2714	315-0204-00			RES,FXD,FILM:200K OHM,5%,0.25W	19701	5043CX200K0J
A25R2715	321-0356-00			RES,FXD,FILM:49.9K OHM,1%,0.125W,TC=T0	19701	5033ED49K90F
A25R2716	321-0385-00			RES,FXD,FILM:100K OHM,1%,0.125W,TC=T0	19701	5033ED100K0F
A25R2717	321-0360-00			RES,FXD,FILM:54.9K OHM,1%,0.125W,TC=T0	19701	5033ED54K90F
A25R2718	321-0397-00			RES,FXD,FILM:133K OHM,1%,0.125W,TC=T0	19701	5043ED133K0F
A25R2719	321-0423-00			RES,FXD,FILM:249K OHM,1%,0.125W,TC=T0	19701	5043ED249K0F
A25R2721	315-0822-00			RES,FXD,FILM:8.2K OHM,5%,0.25W	19701	5043CX8K200J
A25R2722	315-0184-00			RES,FXD,FILM:180K OHM,5%,0.25W	19701	5043CX180K0J
A25R2723	321-0299-00			RES,FXD,FILM:12.7K OHM,1%,0.125W,TC=T0	19701	5033ED12K70F
A25R2724	321-0383-00			RES,FXD,FILM:95.3K OHM,1%,0.125W,TC=T0	07716	CEAD95301F
A25R2725	311-2237-00			RES,VAR,NONWW:TRMR,25K OHM,20%,0.5W LINEAR	TK1450	GF06U
A25R2726	321-0383-00			RES,FXD,FILM:95.3K OHM,1%,0.125W,TC=T0	07716	CEAD95301F
A25R2727	315-0243-00			RES,FXD,FILM:24K OHM,5%,0.25W	57668	NTR25J-E24K0
A25R2728	315-0103-00			RES,FXD,FILM:10K OHM,5%,0.25W	19701	5043CX10K00J
A25R2729	315-0683-00			RES,FXD,FILM:68K OHM,5%,0.25W	57668	NTR25J-E68K0
A25R2731	315-0681-00			RES,FXD,FILM:680 OHM,5%,0.25W	57668	NTR25J-E680E
A25R2732	315-0152-00			RES,FXD,FILM:1.5K OHM,5%,0.25W	57668	NTR25J-E01K5
A25R2733	315-0222-00			RES,FXD,FILM:2.2K OHM,5%,0.25W	57668	NTR25J-E02K2

http://manoman.sqhill.com

Component No.	Tektronix Part No.	Serial/Assembly No. Effective	Dscont	Name & Description	Mfr. Code	Mfr. Part No.
A25R2734	321-0356-00			RES,FXD,FILM:49.9K OHM,1%,0.125W,TC=T0	19701	5033ED49K90F
A25R2735	311-2238-00			RES,VAR,NONWW:TRMR,50K OHM,20%,0.5W LINEAR	TK1450	GF06UT 50 K
A25R2736	321-0373-00			RES,FXD,FILM:75.0K OHM,1%,0.125W,TC=T0	19701	5033ED75K00F
A25R2741	315-0103-00			RES,FXD,FILM:10K OHM,5%,0.25W	19701	5043CX10K00J
A25R2742	315-0333-00			RES,FXD,FILM:33K OHM,5%,0.25W	57668	NTR25J-E33K0
A25R2743	315-0224-00			RES,FXD,FILM:220K OHM,5%,0.25W	57668	NTR25J-E220K
A25R2744	321-0385-00			RES,FXD,FILM:100K OHM,1%,0.125W,TC=T0	19701	5033ED100K0F
A25R2745	311-2237-00			RES,VAR,NONWW:TRMR,25K OHM,20%,0.5W LINEAR	TK1450	GF06U
A25R2746	321-0311-00			RES,FXD,FILM:16.9K OHM,1%,0.125W,TC=T0	07716	CEAC16901F
A25R2747	321-0349-00			RES,FXD,FILM:42.2K OHM,1%,0.125W,TC=T0	07716	CEAD42201F
A25R2748	321-0460-00			RES,FXD,FILM:604K OHM,1%,0.125W,TC=T0	07716	CEAD60402F
A25R2751	315-0202-00			RES,FXD,FILM:2K OHM,5%,0.25W	57668	NTR25J-E 2K
A25R2752	315-0621-00			RES,FXD,FILM:620 OHM,5%,0.25W	57668	NTR25J-E620E
A25R2753	321-0402-00			RES,FXD,FILM:150K OHM,1%,0.125W,TC=T0	19701	5033ED150K0F
A25R2754	321-0410-00			RES,FXD,FILM:182K OHM,1%,0.125W,TC=T0	19701	5033ED182K0F
A25R2755	315-0302-00			RES,FXD,FILM:3K OHM,5%,0.25W	57668	NTR25J-E03K0
A25R2770	315-0683-00			RES,FXD,FILM:68K OHM,5%,0.25W	57668	NTR25J-E68K0
A25R2772	315-0183-00			RES,FXD,FILM:18K OHM,5%,0.25W	19701	5043CX18K00J
A25R2774	315-0394-00			RES,FXD,FILM:390K OHM,5%,0.25W	57668	NTR25J-E390K
A25R2775	315-0202-00			RES,FXD,FILM:2K OHM,5%,0.25W	57668	NTR25J-E 2K
A25R2779	315-0151-00			RES,FXD,FILM:150 OHM,5%,0.25W	57668	NTR25J-E150E
A25R2782	315-0103-00			RES,FXD,FILM:10K OHM,5%,0.25W	19701	5043CX10K00J
A25R2783	315-0103-00			RES,FXD,FILM:10K OHM,5%,0.25W	19701	5043CX10K00J
A25R2785	315-0151-00			RES,FXD,FILM:150 OHM,5%,0.25W	57668	NTR25J-E150E
A25R2786	321-0181-00			RES,FXD,FILM:750 OHM,1%,0.125W,TC=T0	07716	CEAD750R0F
A25R2787	321-0202-00			RES,FXD,FILM:1.24K OHM,1%,0.125W,TC=T0	24546	NA55D1241F
A25R2788	315-0103-00			RES,FXD,FILM:10K OHM,5%,0.25W	19701	5043CX10K00J
A25R2789	315-0102-00			RES,FXD,FILM:1K OHM,5%,0.25W	57668	NTR25JE01K0
A25R2802	315-0113-00			RES,FXD,FILM:11K OHM,5%,0.25W	19701	5043CX11K00J
A25R2804	315-0391-00			RES,FXD,FILM:390 OHM,5%,0.25W	57668	NTR25J-E390E
A25R2805	315-0123-00			RES,FXD,FILM:12K OHM,5%,0.25W	57668	NTR25J-E12K0
A25R2808	301-0753-00			RES,FXD,FILM:75K OHM,5%,0.5W	01121	EB7535
A25R2809	315-0391-00			RES,FXD,FILM:390 OHM,5%,0.25W	57668	NTR25J-E390E
A25R2812	315-0471-00			RES,FXD,FILM:470 OHM,5%,0.25W	57668	NTR25J-E470E
A25R2813	315-0471-00			RES,FXD,FILM:470 OHM,5%,0.25W	57668	NTR25J-E470E
A25R2814	315-0102-00			RES,FXD,FILM:1K OHM,5%,0.25W	57668	NTR25JE01K0
A25R2815	322-0385-00			RES,FXD,FILM:100K OHM,1%,0.25W,TC=T0	75042	CEBT0-1003F
A25R2816	315-0332-00			RES,FXD,FILM:3.3K OHM,5%,0.25W	57668	NTR25J-E03K3
A25R2817	315-0332-00			RES,FXD,FILM:3.3K OHM,5%,0.25W	57668	NTR25J-E03K3
A25R2819	315-0104-00			RES,FXD,FILM:100K OHM,5%,0.25W	57668	NTR25J-E100K
A25R2821	315-0473-00			RES,FXD,FILM:47K OHM,5%,0.25W	57668	NTR25J-E47K0
A25R2822	315-0154-00			RES,FXD,FILM:150K OHM,5%,0.25W	57668	NTR25J-E150K
A25R2825	315-0472-00			RES,FXD,FILM:4.7K OHM,5%,0.25W	57668	NTR25J-E04K7
A25R2826	315-0433-00			RES,FXD,FILM:43K OHM,5%,0.25W	19701	5043CX43K00J
A25R2827	315-0335-00			RES,FXD,FILM:3.3M OHM,5%,0.25W	01121	CB3355
A25R2828	315-0154-00			RES,FXD,FILM:150K OHM,5%,0.25W	57668	NTR25J-E150K
A25R2831	315-0511-00			RES,FXD,FILM:510 OHM,5%,0.25W	19701	5043CX510R0J
A25R2833	303-0683-00			RES,FXD,CMPSN:68K OHM,5%,1W	01121	GB6835
A25R2835	315-0335-00			RES,FXD,FILM:3.3M OHM,5%,0.25W	01121	CB3355
A25R2836	315-0125-00			RES,FXD,FILM:1.2M OHM,5%,0.25W	19701	5043CX1M200J
A25R2837	315-0155-00			RES,FXD,FILM:1.5M OHM,5%,0.25W	19701	5043CX1M500J
A25R2838	315-0305-00			RES,FXD,FILM:3M OHM,5%,0.25W	01121	CB3055
A25R2839	307-0106-00			RES,FXD,CMPSN:4.7 OHM,5%,0.25W	01121	CB 47G5
A25R2841	315-0203-00			RES,FXD,FILM:20K OHM,5%,0.25W	57668	NTR25J-E 20K
A25R2842	321-0385-00			RES,FXD,FILM:100K OHM,1%,0.125W,TC=T0	19701	5033ED100K0F
A25R2843	315-0302-00			RES,FXD,FILM:3K OHM,5%,0.25W	57668	NTR25J-E03K0
A25R2844	321-0317-00			RES,FXD,FILM:19.6K OHM,1%,0.125W,TC=T0	07716	CEAD19601F
A25R2845	311-2231-00			RES,VAR,NONWW:TRMR,1K OHM,20%,0.5W	TK1450	GF06UT 1K

http://manoman.sqhill.com

Component No.	Tektronix Part No.	Serial/Assembly No. Effective	Dscont	Name & Description	Mfr. Code	Mfr. Part No.
A25R2846	311-2233-00			RES,VAR,NONWW:TRMR,3.0K OHM,20%,0.5W LINEAR	TK1450	GF06UT3K
A25R2847	321-0363-00			RES,FXD,FILM:59.0K OHM,1%,0.125W,TC=T0	07716	CEAD59001F
A25R2848	315-0164-00			RES,FXD,FILM:160K OHM,5%,0.25W	57668	NTR25J-E160K
A25R2849	315-0303-00			RES,FXD,FILM:30K OHM,5%,0.25W	19701	5043CX30K00J
A25R2850	311-2233-00			RES,VAR,NONWW:TRMR,3.0K OHM,20%,0.5W LINEAR	TK1450	GF06UT3K
A25R2851	321-0360-00			RES,FXD,FILM:54.9K OHM,1%,0.125W,TC=T0	19701	5033ED54K90F
A25R2852	321-0193-00			RES,FXD,FILM:1K OHM,1%,0.125W,TC=T0	19701	5033ED1K00F
A25R2853	321-0251-00			RES,FXD,FILM:4.02K OHM,1%,0.125W,TC=T0	19701	5033ED4K020F
A25R2854	321-0360-00			RES,FXD,FILM:54.9K OHM,1%,0.125W,TC=T0	19701	5033ED54K90F
A25R2855	311-2231-00			RES,VAR,NONWW:TRMR,1K OHM,20%,0.5W	TK1450	GF06UT 1K
A25R2856	321-0314-00			RES,FXD,FILM:18.2K OHM,1%,0.125W,TC=T0	19701	5043ED18K20F
A25R2857	321-0300-00			RES,FXD,FILM:13.0K OHM,1%,0.125W,TC=T0	07716	CEAD13001F
A25R2861	315-0222-00			RES,FXD,FILM:2.2K OHM,5%,0.25W	57668	NTR25J-E02K2
A25R2862	315-0752-00			RES,FXD,FILM:7.5K OHM,5%,0.25W	57668	NTR25J-E07K5
A25R2863	322-0385-00			RES,FXD,FILM:100K OHM,1%,0.25W,TC=T0	75042	CEBT0-1003F
A25R2864	315-0822-00			RES,FXD,FILM:8.2K OHM,5%,0.25W	19701	5043CX8K200J
A25R2865	315-0103-00			RES,FXD,FILM:10K OHM,5%,0.25W	19701	5043CX10K00J
A25R2867	315-0201-00			RES,FXD,FILM:200 OHM,5%,0.25W	57668	NTR25J-E200E
A25R2868	301-0203-00			RES,FXD,FILM:20K OHM,5%,0.5W	19701	5053CX20K00J
A25R2869	315-0103-00			RES,FXD,FILM:10K OHM,5%,0.25W	19701	5043CX10K00J
A25R2874	315-0271-00			RES,FXD,FILM:270 OHM,5%,0.25W	57668	NTR25J-E270E
A25R2876	315-0471-00			RES,FXD,FILM:470 OHM,5%,0.25W	57668	NTR25J-E470E
A25R2900	321-0229-00			RES,FXD,FILM:2.37K OHM,1%,0.125W,TC=T0	19701	5043ED2K37F
A25R2901	321-0361-00			RES,FXD,FILM:56.2K OHM,1%,0.125W,TC=T0	07716	CEAD56201F
A25R2902	321-0346-00			RES,FXD,FILM:39.2K OHM,1%,0.125W,TC=T0	19701	5043ED39K20F
A25R2903	315-0103-00			RES,FXD,FILM:10K OHM,5%,0.25W	19701	5043CX10K00J
A25R2904	315-0103-00			RES,FXD,FILM:10K OHM,5%,0.25W	19701	5043CX10K00J
A25R2906	321-0388-00			RES,FXD,FILM:107K OHM,1%,0.125W,TC=T0	07716	CEAD10702F
A25R2907	321-0466-00			RES,FXD,FILM:698K OHM,1%,0.125W,TC=T0	19701	5043ED698K0F
A25R2911	321-0298-00			RES,FXD,FILM:12.4K OHM,1%,0.125W,TC=T0	07716	CEAD12401F
A25R2912	321-0408-00			RES,FXD,FILM:174K OHM,1%,0.125W,TC=T0	07716	CEAD17402F
A25R2913	321-0382-00			RES,FXD,FILM:93.1K OHM,1%,0.125W,TC=T0	07716	CEAD93101F
A25R2914	315-0223-00			RES,FXD,FILM:22K OHM,5%,0.25W	19701	5043CX22K00J92U
A25R2915	321-0423-00			RES,FXD,FILM:249K OHM,1%,0.125W,TC=T0	19701	5043ED249K0F
A25R2918	315-0471-00			RES,FXD,FILM:470 OHM,5%,0.25W	57668	NTR25J-E470E
A25R2919	315-0753-00			RES,FXD,FILM:75K OHM,5%,0.25W	57668	NTR25J-E75K0
A25R2924	315-0471-00			RES,FXD,FILM:470 OHM,5%,0.25W	57668	NTR25J-E470E
A25R2926	303-0823-00			RES,FXD,CMPSN:82K OHM,5%,1W	01121	GB8235
A25R2927	303-0823-00			RES,FXD,CMPSN:82K OHM,5%,1W	01121	GB8235
A25R2930	315-0333-00			RES,FXD,FILM:33K OHM,5%,0.25W	57668	NTR25J-E33K0
A25R2931	315-0103-00			RES,FXD,FILM:10K OHM,5%,0.25W	19701	5043CX10K00J
A25R2932	315-0103-00			RES,FXD,FILM:10K OHM,5%,0.25W	19701	5043CX10K00J
A25R2933	315-0104-00			RES,FXD,FILM:100K OHM,5%,0.25W	57668	NTR25J-E100K
A25R2937	315-0125-00			RES,FXD,FILM:1.2M OHM,5%,0.25W	19701	5043CX1M200J
A25R2940	321-0431-00			RES,FXD,FILM:301K OHM,1%,0.125W,TC=T0	07716	CEAD30102F
A25R2941	321-0379-00			RES,FXD,FILM:86.6K OHM,1%,0.125W,TC=T0	07716	CEAD86601F
A25R2942	315-0104-00			RES,FXD,FILM:100K OHM,5%,0.25W	57668	NTR25J-E100K
A25R2946	301-0393-00			RES,FXD,FILM:39K OHM,5%,0.5W	19701	5053CX39K00J
A25R2947	321-0452-00			RES,FXD,FILM:499K OHM,1%,0.125W,TC=T0	19701	5043ED499K0F
A25R2948	315-0222-00			RES,FXD,FILM:2.2K OHM,5%,0.25W	57668	NTR25J-E02K2
A25R2951	315-0822-00			RES,FXD,FILM:8.2K OHM,5%,0.25W	19701	5043CX8K200J
A25R2952	321-0277-00			RES,FXD,FILM:7.50K OHM,1%,0.125W,TC=T0	24546	NA55D7501F
A25R2953	315-0392-00			RES,FXD,FILM:3.9K OHM,5%,0.25W	57668	NTR25J-E03K9
A25R2954	315-0273-00			RES,FXD,FILM:27K OHM,5%,0.25W	57668	NTR25J-E27K0
A25R2955	321-0437-00			RES,FXD,FILM:348K OHM,1%,0.125W,TC=T0	19701	5043ED348K0F
A25R2956	321-0429-00			RES,FXD,FILM:287K OHM,1%,0.125W,TC=T0	07716	CEAD28702F
A25R2962	315-0473-00			RES,FXD,FILM:47K OHM,5%,0.25W	57668	NTR25J-E47K0
A25R2963	315-0273-00			RES,FXD,FILM:27K OHM,5%,0.25W	57668	NTR25J-E27K0
A25R2964	321-0466-00			RES,FXD,FILM:698K OHM,1%,0.125W,TC=T0	19701	5043ED698K0F

http://manoman.sqhill.com

Component No.	Tektronix Part No.	Serial/Assembly No. Effective	Dscont	Name & Description	Mfr. Code	Mfr. Part No.
A25R2966	315-0753-00			RES,FXD,FILM:75K OHM,5%,0.25W	57668	NTR25J-E75K0
A25R2967	315-0823-00			RES,FXD,FILM:82K OHM,5%,0.25W	57668	NTR25J-E82K
A25R2970	321-0397-00			RES,FXD,FILM:133K OHM,1%,0.125W,TC=T0	19701	5043ED133K0F
A25R2971	321-0387-00			RES,FXD,FILM:105K OHM,1%,0.125W,TC=T0	07716	CEAD10502F
A25R2972	315-0104-00			RES,FXD,FILM:100K OHM,5%,0.25W	57668	NTR25J-E100K
A25R2976	301-0393-00			RES,FXD,FILM:39K OHM,5%,0.5W	19701	5053CX39K00J
A25R2977	321-0452-00			RES,FXD,FILM:499K OHM,1%,0.125W,TC=T0	19701	5043ED499K0F
A25R2978	315-0222-00			RES,FXD,FILM:2.2K OHM,5%,0.25W	57668	NTR25J-E02K2
A25R2980	315-0392-00			RES,FXD,FILM:3.9K OHM,5%,0.25W	57668	NTR25J-E03K9
A25R2981	321-0466-00			RES,FXD,FILM:698K OHM,1%,0.125W,TC=T0	19701	5043ED698K0F
A25R2982	321-0496-00			RES,FXD,FILM:1.43 MEG OHM,1%,0.125W,TC=T0	01121	ORDER BY DESCR
A25R2983	321-0437-00			RES,FXD,FILM:348K OHM,1%,0.125W,TC=T0	19701	5043ED348K0F
A25R2986	315-0623-00			RES,FXD,FILM:62K OHM,5%,0.25W	19701	5043CX62K00J
A25R2987	315-0203-00			RES,FXD,FILM:20K OHM,5%,0.25W	57668	NTR25J-E 20K
A25R2990	321-0429-00			RES,FXD,FILM:287K OHM,1%,0.125W,TC=T0	07716	CEAD28702F
A25R2991	321-0397-00			RES,FXD,FILM:133K OHM,1%,0.125W,TC=T0	19701	5043ED133K0F
A25R2992	315-0104-00			RES,FXD,FILM:100K OHM,5%,0.25W	57668	NTR25J-E100K
A25R2996	301-0393-00			RES,FXD,FILM:39K OHM,5%,0.5W	19701	5053CX39K00J
A25R2997	321-0452-00			RES,FXD,FILM:499K OHM,1%,0.125W,TC=T0	19701	5043ED499K0F
A25R2998	315-0222-00			RES,FXD,FILM:2.2K OHM,5%,0.25W	57668	NTR25J-E02K2
A25R3010	315-0623-00			RES,FXD,FILM:62K OHM,5%,0.25W	19701	5043CX62K00J
A25R3011	315-0203-00			RES,FXD,FILM:20K OHM,5%,0.25W	57668	NTR25J-E 20K
A25R3012	315-0203-00			RES,FXD,FILM:20K OHM,5%,0.25W	57668	NTR25J-E 20K
A25R3015	315-0393-00			RES,FXD,FILM:39K OHM,5%,0.25W	57668	NTR25J-E39K0
A25R3016	321-0445-00			RES,FXD,FILM:422K OHM,1%,0.125W,TC=T0	07716	CEAD42202F
A25R3018	321-0396-00			RES,FXD,FILM:130K OHM,1%,0.125W,TC=T0	07716	CEAD13002F
A25R3021	321-0414-00			RES,FXD,FILM:200K OHM,1%,0.125W,TC=T0	07716	CEAD20002F
A25R3022	315-0104-00			RES,FXD,FILM:100K OHM,5%,0.25W	57668	NTR25J-E100K
A25R3026	321-0452-00			RES,FXD,FILM:499K OHM,1%,0.125W,TC=T0	19701	5043ED499K0F
A25R3027	315-0102-00			RES,FXD,FILM:1K OHM,5%,0.25W	57668	NTR25JE01K0
A25R3044	301-0333-00			RES,FXD,FILM:33K OHM,5%,0.5W	19701	5053CX33K00J
A25R3045	321-0386-00			RES,FXD,FILM:102K OHM,1%,0.125W,TC=T0	07716	CEAD10202F
A25R3046	321-0402-00			RES,FXD,FILM:150K OHM,1%,0.125W,TC=T0	19701	5033ED150K0F
A25R3047	321-0385-00			RES,FXD,FILM:100K OHM,1%,0.125W,TC=T0	19701	5033ED100K0F
A25R3048	315-0203-00			RES,FXD,FILM:20K OHM,5%,0.25W	57668	NTR25J-E 20K
A25R3049	315-0683-00			RES,FXD,FILM:68K OHM,5%,0.25W	57668	NTR25J-E68K0
A25R3052	315-0473-00			RES,FXD,FILM:47K OHM,5%,0.25W	57668	NTR25J-E47K0
A25R3054	315-0273-00			RES,FXD,FILM:27K OHM,5%,0.25W	57668	NTR25J-E27K0
A25R3055	315-0273-00			RES,FXD,FILM:27K OHM,5%,0.25W	57668	NTR25J-E27K0
A25R3064	315-0244-00			RES,FXD,FILM:240K OHM,5%,0.25W	19701	5043CX240K0J
A25R3066	315-0102-00			RES,FXD,FILM:1K OHM,5%,0.25W	57668	NTR25JE01K0
A25R3068	308-0290-00			RES,FXD,MM:8 OHM,5%,5W	00213	1250SB-8-5
A25R3077	315-0103-00			RES,FXD,FILM:10K OHM,5%,0.25W	19701	5043CX10K00J
A25R3078	315-0100-00			RES,FXD,FILM:10 OHM,5%,0.25W	19701	5043CX10RR00J
A25S2558	260-1209-00			SWITCH,PUSH:1BUTTON,4 POLE,DISPLAY	31918	601347
A25S2624	260-1211-00			SWITCH,PUSH:1A,28VDC	31918	601348
A25U2552	156-0043-03			MICROCKT,DGTL:QUAD 2-INP NOR GATE,SCRN	18324	N7402(NB OR FB)
A25U2556	156-0030-03			MICROCKT,DGTL:QUAD 2 INPUT NAND GATE,SCRN	18324	N7400(NB OR FB)
A25U2562	156-0172-02			MICROCKT,DGTL:DUAL RETRIG MONOSTABLE MV	07263	74123PCQR
A25U2565	156-0186-02			MICROCKT,DGTL:QUAD 2-INP NAND GATE,	18324	N7403(NB OR FB)
A25U2588	156-0383-02			MICROCKT,DGTL:QUAD 2-INP NOR GATE,SCRN,	18324	N74LS02NB
A25U2592	156-0043-03			MICROCKT,DGTL:QUAD 2-INP NOR GATE,SCRN	18324	N7402(NB OR FB)
A25U2594	156-0172-02			MICROCKT,DGTL:DUAL RETRIG MONOSTABLE MV	07263	74123PCQR
A25U2608	156-0043-03			MICROCKT,DGTL:QUAD 2-INP NOR GATE,SCRN	18324	N7402(NB OR FB)
A25U2682	156-0041-05			MICROCKT,DGTL:DUAL D FLIP FLOP SCRN	01295	SN7474NP3
A25U2684	156-0172-02			MICROCKT,DGTL:DUAL RETRIG MONOSTABLE MV	07263	74123PCQR
A25VR2808	152-0280-00			SEMICOND DVC,DI:ZEN,S1,6.2V,5%,0.4W,DO-7	04713	1N753A
A25VR2867	152-0280-00			SEMICOND DVC,DI:ZEN,S1,6.2V,5%,0.4W,DO-7	04713	1N753A
A25VR2927	152-0289-00			SEMICOND DVC,DI:ZEN,SI,180V,5%,0.4W,DO-7	04713	SZ12484KRL

http://manoman.sqhill.com

Component No.	Tektronix Part No.	Serial/Assembly No. Effective	Dscont	Name & Description	Mfr. Code	Mfr. Part No.
A26	670-9176-00			CIRCUIT BD ASSY:STORAGE CONTROL	80009	670-9176-00
A26R1101	311-2326-00			RES,VAR,NONWW:10K OHM,10%,0.25W	12697	CM45212
A26R1201	311-2326-00			RES,VAR,NONWW:10K OHM,10%,0.25W	12697	CM45212
A26R1301	311-2322-00			RES,VAR,NONWW:500K OHM,10%,0.125W	12697	CM45216
A26R1401	311-2327-00			RES,VAR,NONWW:10K OHM,10%,0.125W	12697	CM45217
A26S1301	----- -----			(PART OF A26R1301)		
A26S1401	----- -----			(PART OF A26R1401)		

http://manoman.sqhill.com

Component No.	Tektronix Part No.	Serial/Assembly No. Effective	Dscont	Name & Description	Mfr. Code	Mfr. Part No.
A27	670-4778-01			CIRCUIT BD ASSY:TRIGGER LIGHT	80009	670-4778-01
A27DS342	150-0048-01			LAMP,INCAND:5V,0.06A,#683,AGED & SEL	58854	683AS15
A27DS345	150-0048-01			LAMP,INCAND:5V,0.06A,#683,AGED & SEL	58854	683AS15
A27DS346	150-0048-01			LAMP,INCAND:5V,0.06A,#683,AGED & SEL	58854	683AS15

http://manoman.sqhill.com

Component No.	Tektronix Part No.	Serial/Assembly No. Effective	Dscont	Name & Description	Mfr. Code	Mfr. Part No.
A28	670-4778-01			CIRCUIT BD ASSY:TRIGGER LIGHT	80009	670-4778-01
A28DS352	150-0048-01			LAMP,INCAND:5V,0.06A,#683,AGED & SEL	58854	683AS15
A28DS355	150-0048-01			LAMP,INCAND:5V,0.06A,#683,AGED & SEL	58854	683AS15
A28DS356	150-0048-01			LAMP,INCAND:5V,0.06A,#683,AGED & SEL	58854	683AS15

http://manoman.sqhill.com

Component No.	Tektronix Part No.	Serial/Assembly No. Effective	Dscont	Name & Description	Mfr. Code	Mfr. Part No.
B90	119-1545-01			FAN,TUBEAXIAL:12V,4.8W,RPM,35 CFM	54473	FBP 08B12H
C37	285-0938-00			CAP,FXD,PLASTIC:0.03UF,5%,900V	50558	PA6-0738J
C81	283-0003-00			CAP,FXD,CER DI:0.01UF,+80-20%,150V	59821	D103Z40Z5UJDCEX
DL592	119-0757-00			DELAY LINE,ELEC:65NS,100 OHMS	80009	119-0757-00
DS365	150-0121-07			LAMP,CARTRIDGE:5V,0.06A,GREEN,4.125 L,5-N	80009	150-0121-07
DS901	150-0048-01			LAMP,INCAND:5V,0.06A,#683,AGED & SEL	58854	683AS15
DS902	150-0048-01			LAMP,INCAND:5V,0.06A,#683,AGED & SEL	58854	683AS15
DS2558	150-1033-00			LT EMITTING DIO:AMBER,585NM,40MA MAX	50434	HLMP 1401
DS2624	150-1033-00			LT EMITTING DIO:AMBER,585NM,40MA MAX	50434	HLMP 1401
F10	159-0017-00			FUSE,CARTRIDGE:3AG,4A,250V,FAST BLOW	71400	MTH-CW-4
FL10	119-0420-00			FILTER,RFI:6A,250VAC,400HZ	02777	F-11935-6
L37	108-0761-00			COIL,RF:FIXED,1MH	80009	108-0761-00
L2200	108-0851-00			COIL,TUBE DEFL:TRACE ROTATOR	80009	108-0851-00
LR81	108-0685-00			COIL,RF:FIXED,62NH	80009	108-0685-00
LR82	108-0685-00			COIL,RF:FIXED,62NH	80009	108-0685-00
R6	303-0105-00			RES,FXD,CMPSN:1M OHM,5%,1W	01121	GB1055
R83	307-0292-24			RES,FXD,FILM:(2)175 OHM,(2)33.7 OHM	80009	307-0292-24
R90	308-0175-00			RES,FXD,WW:10 OHM,5%,10W	44655	10EX10R00JQ54
R2195	311-1847-00			RES,VAR,NONWW:PNL,250K OHM,0.5W	12697	382-CM40967
R2465	311-0310-00			RES,VAR,NONWW:PNL,5K OHM,0.5W	01121	W7350A
R2720	311-0546-00			RES,VAR,NONWW:TRMR,10K OHM,0.5W	01121	W-8154A
S10	260-1709-00			SWITCH,PUSH:DPST,15A,250VAC,PUSH-PUSH	77342	A9W1-762-6-3
S99	260-0450-00			SWITCH,SLIDE:DPTT,0.5A,125VAC	82389	11D-1007
T110	120-1183-00			XFMR,PWR,STPDN:HIGH FREQUENCY	80009	120-1183-00
V2200	154-0780-01			CRT ASSEMBLY:FINISHED	80009	154-0780-01

http://manoman.sqhill.com

DIAGRAMS AND CIRCUIT BOARD ILLUSTRATIONS

Symbols

Graphic symbols and class designation letters are based on ANSI Standard Y32.2-1975.

Logic symbology is based on ANSI Y32.14-1973 in terms of positive logic. Logic symbols depict the logic function performed and may differ from the manufacturer's data.

The overline on a signal name indicates that the signal performs its intended function when it is in the low state.

Abbreviations are based on ANSI Y1.1-1972.

Other ANSI standards that are used in the preparation of diagrams by Tektronix, Inc. are:

Y14.15, 1966	Drafting Practices.
Y14.2, 1973	Line Conventions and Lettering.
Y10.5, 1968	Letter Symbols for Quantities Used in Electrical Science and Electrical Engineering.

American National Standard Institute
1430 Broadway
New York, New York 10018

Component Values

Electrical components shown on the diagrams are in the following units unless noted otherwise:

Capacitors = Values one or greater are in picofarads (pF). Values less than one are in microfarads (μF).
Resistors = Ohms (Ω).

The information and special symbols below may appear in this manual.

Assembly Numbers and Grid Coordinates

Each assembly in the instrument is assigned an assembly number (e.g., A20). The assembly number appears on the circuit board outline on the diagram, in the title for the circuit board component location illustration, and in the lookup table for the schematic diagram and corresponding component locator illustration. The Replaceable Electrical Parts list is arranged by assemblies in numerical sequence; the components are listed by component number *(see following illustration for constructing a component number).

The schematic diagram and circuit board component location illustration have grids. A lookup table with the grid coordinates is provided for ease of locating the component. Only the components illustrated on the facing diagram are listed in the lookup table. When more than one schematic diagram is used to illustrate the circuitry on a circuit board, the circuit board illustration may only appear opposite the first diagram on which it was illustrated; the lookup table will list the diagram number of other diagrams that the circuitry of the circuit board appears on.

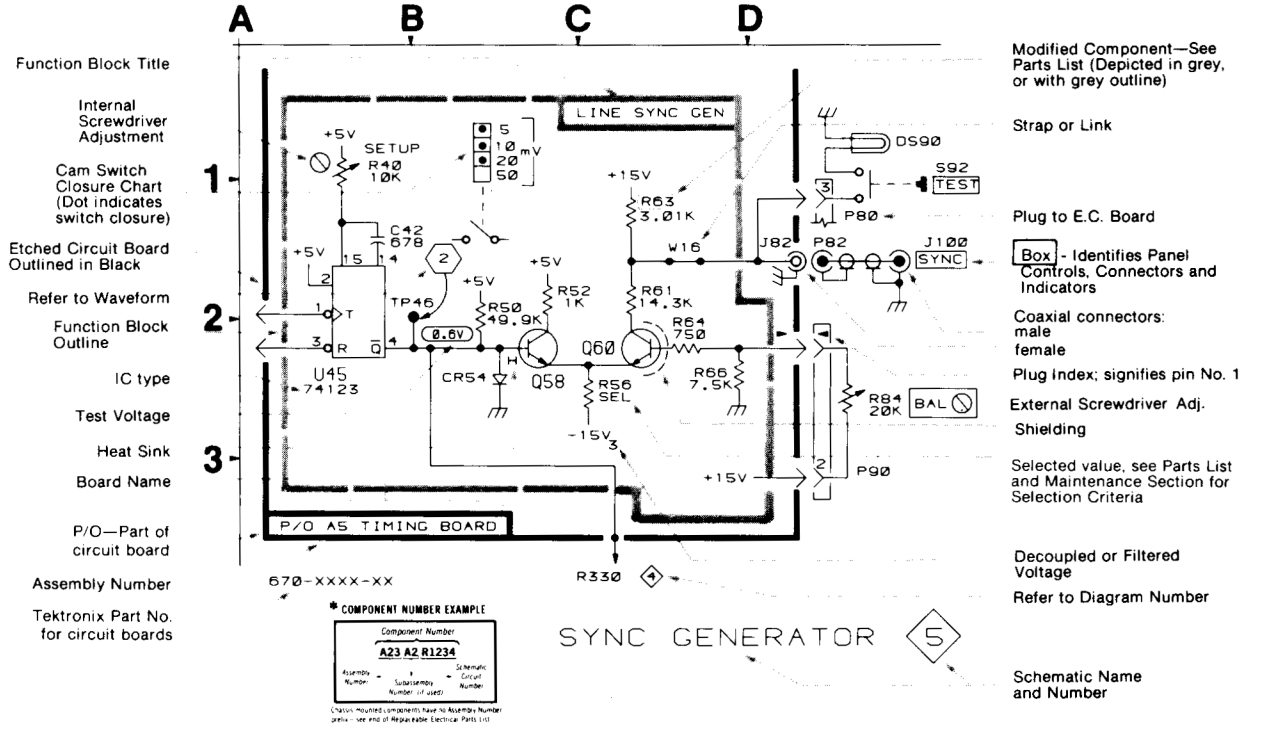

http://manoman.sqhill.com

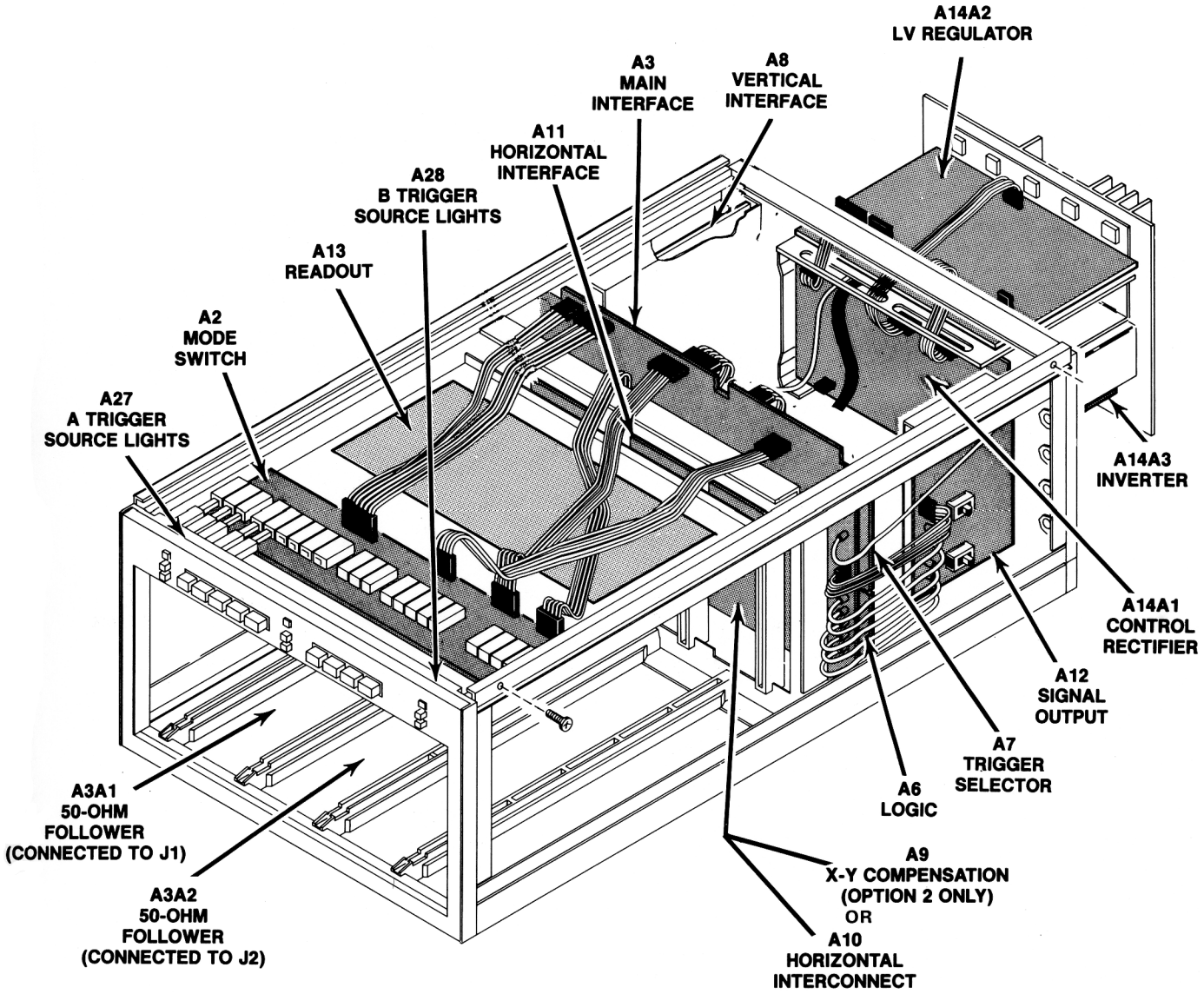

Figure 8-1 Location of circuit boards in the 7934 acquisition unit.

http://manoman.sqhill.com

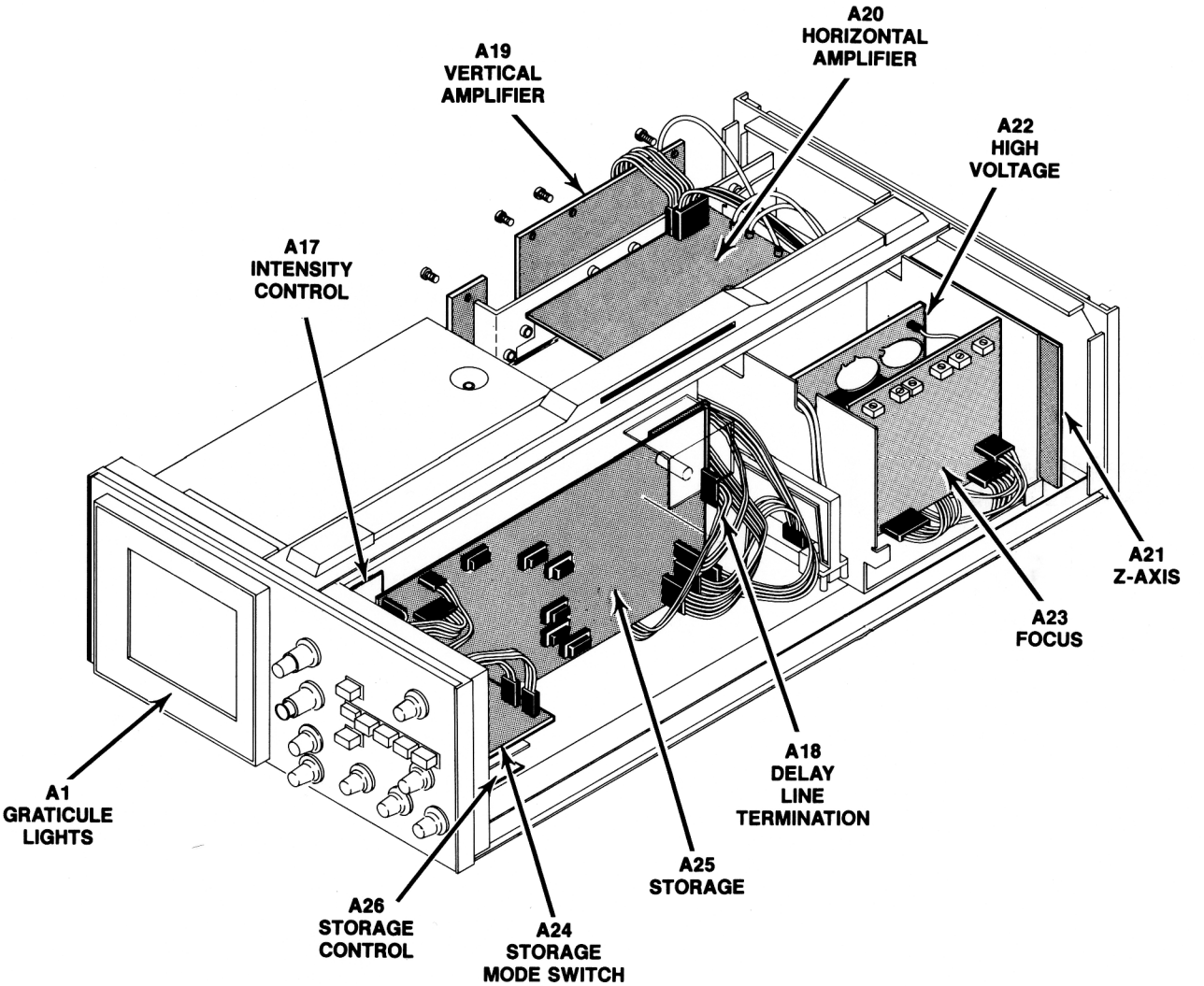

5880-102(b)

Figure 8-2 Location of circuit boards in the 7934 display unit.

http://manoman.sqhill.com

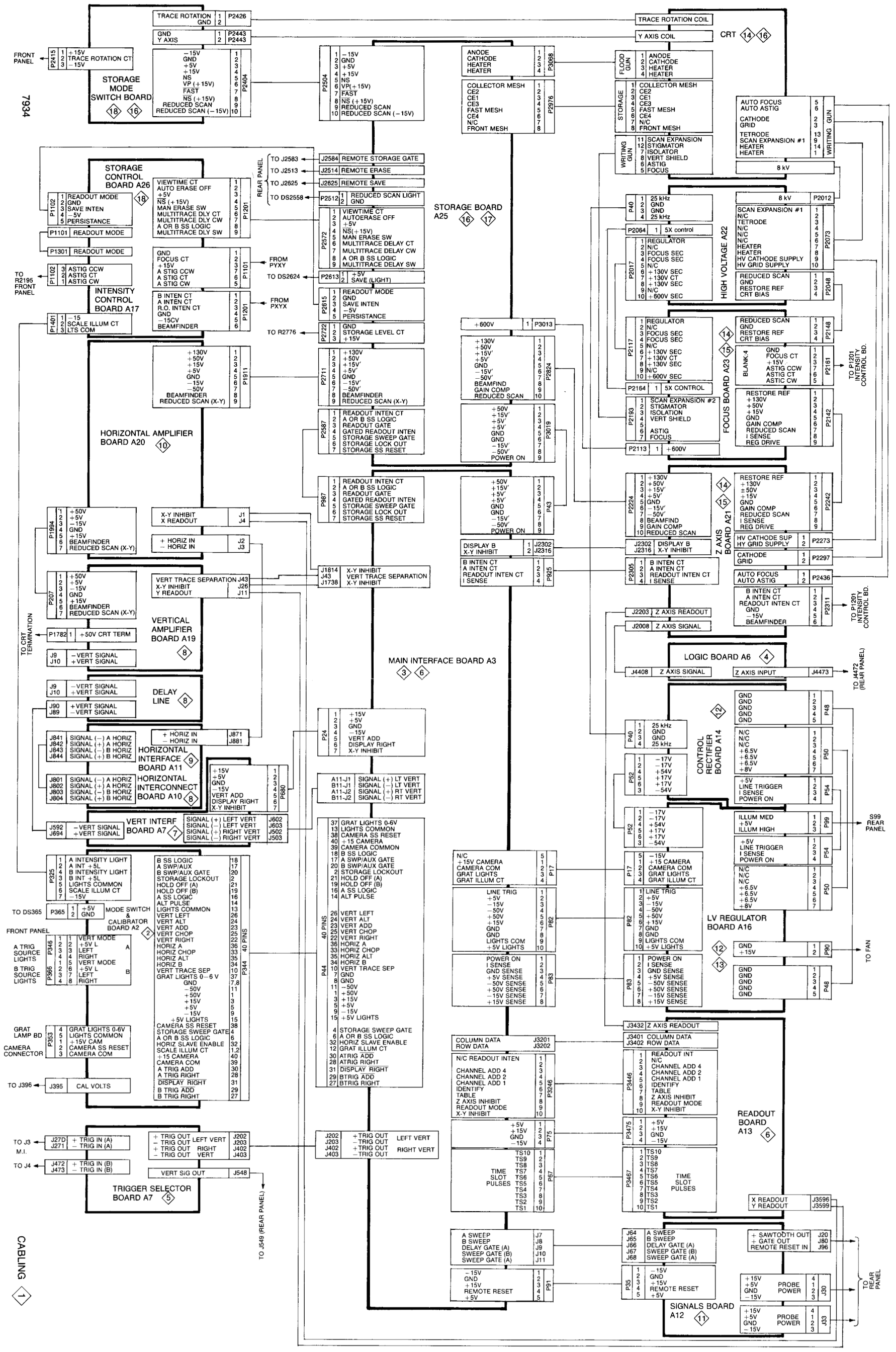

http://manoman.sqhill.com

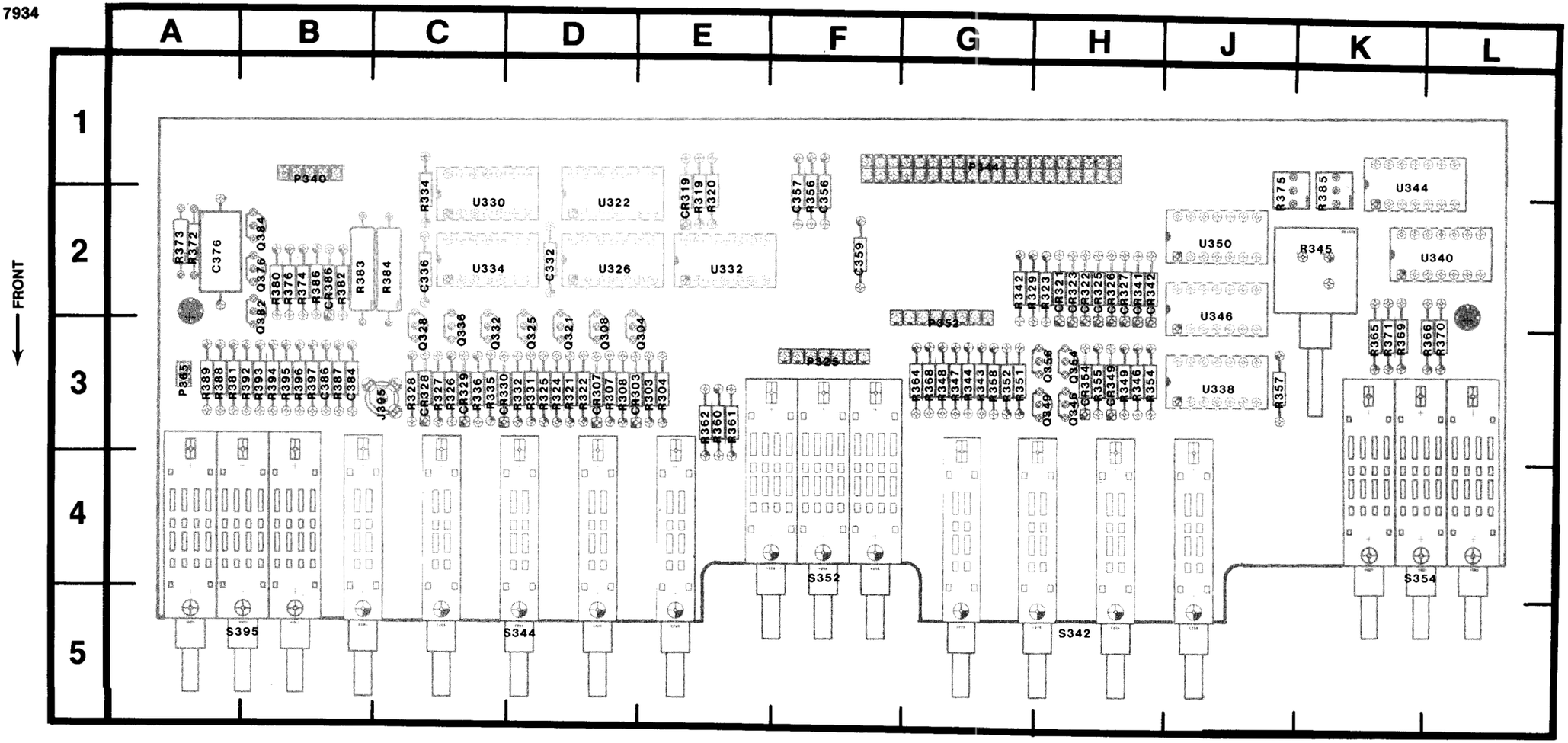

5880-200

Figure 8-3. A2-Mode Switch Circuit Board Assembly.

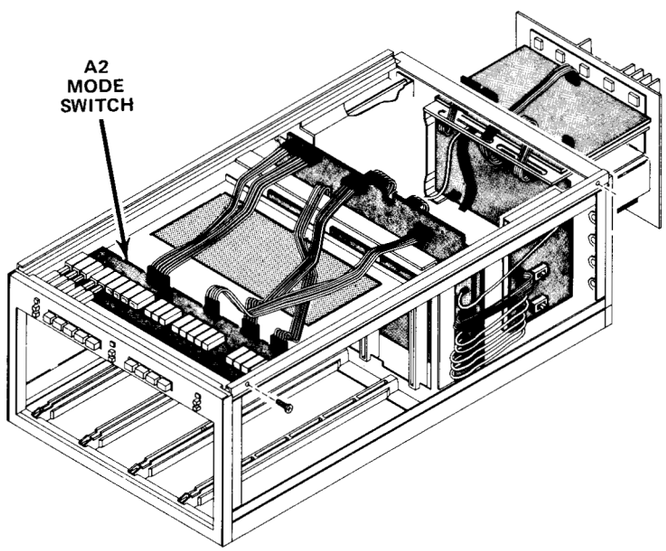

http://manoman.sqhill.com

CALIBRATOR AND MODE SWITCH DIAGRAM 2

ASSEMBLY A1 — Graticule Light Circuit Board (not pictured)

CIRCUIT NUMBER	SCHEM LOCATION	BOARD LOCATION	CIRCUIT NUMBER	SCHEM LOCATION	BOARD LOCATION	CIRCUIT NUMBER	SCHEM LOCATION	BOARD LOCATION
DS304	G5	Not pictured						
DS305	C5	Not pictured						
DS306	G4	Not pictured						

ASSEMBLY A2 — Mode Switch Circuit Board

CIRCUIT NUMBER	SCHEM LOCATION	BOARD LOCATION	CIRCUIT NUMBER	SCHEM LOCATION	BOARD LOCATION	CIRCUIT NUMBER	SCHEM LOCATION	BOARD LOCATION
C332	C4	D2	R307	A4	D3	R386	G2	B2
C336	C4	C2	R308	A4	D3	R387	G3	B3
C356	H4	F1	R319	B1	E1	R388	G2	A3
C357	H3	F1	R320	B1	E1	R389	G2	A3
C359	H4	F2	R321	C5	D3	R392	G2	B3
C376	G3	A2	R322	A4	D3	R393	G2	B3
C384	G3	B3	R323	B3	H2	R394	G2	B3
C386	G2	B3	R324	B4	D3	R395	G2	B3
			R325	B4	D3	R396	G2	B3
CR303	A4	D3	R326	B5	C3	R397	H2	B3
CR307	A4	D3	R327	B4	C3			
CR319	B1	E1	R328	B4	C3	S342	C4	H5
CR321	A3	H2	R329	B3	G2	S344	D4	D5
CR322	B3	H2	R331	B5	D3	S352	E4	F4
CR323	A3	H2	R332	C4	D3	S354	F4	K4
CR325	B3	H2	R334	B3	C1	S395	G1	A5
CR326	B3	H2	R335	C4	C3			
CR327	B3	H2	R336	C4	C3	U322A	A2	D1
CR328	C4	C3	R342	C3	G2	U322B	A2	D1
CR329	B2	C3	R343	E4	G3	U322C	B1	D1
CR330	B5	C3	R344	E4	G3	U322D	B2	D1
CR341	C3	H2	R345	D1	K2	U326A	B2	D2
CR342	C3	H2	R346	E3	H3	U326B	A2	D2
CR349	E4	H3	R347	E4	G3	U326C	A2	D2
CR354	F4	H3	R348	E4	G3	U326D	B2	D2
CR386	G2	B2	R349	E3	H3	U330A	C3	C1
			R351	F4	G3	U330B	C3	C1
J395	G1	C3	R352	F4	G3	U332A	C3	E2
			R354	F3	H3	U332B	C2	E2
P325	C1	F3	R355	F4	H3	U332C	C2	E2
P340	F4	B1	R356	H3	F1	U332D	B1	E2
P344	A1	G1	R357	F3	J3	U334A	C4	C2
P344	A5	G1	R358	F4	G3	U334B	C4	C2
P344	F1	G1	R360	D3	E3	U334C	C4	C2
P344	G4	G1	R361	D3	E3	U334D	C4	C2
P352	E4	G2	R362	D2	E3	U338A	E3	J3
P365	G4	A3	R364	F3	G3	U338B	E3	J3
Q304	A3	D2	R365	E2	K2	U338C	F3	J3
Q308	A4	D2	R366	F2	K2	U338D	F3	J3
Q321	A4	D2	R368	E1	G3	U340A	E3	L2
Q325	B4	D2	R369	E3	K2	U340B	E2	L2
Q328	B4	C2	R370	F2	L2	U340C	F3	L2
Q332	C4	C2	R371	F1	K2	U344A	E2	K1
Q336	C4	C2	R372	G3	A2	U344B	E3	K1
Q346	E4	H3	R373	G3	A2	U344C	F2	K1
Q349	E4	H3	R374	G3	B2	U344D	F2	K1
Q354	E4	H3	R375	G3	J1	U346A	F2	J2
Q356	F4	H3	R376	H3	B2	U346B	E2	J2
Q376	G3	B2	R380	G3	B2	U346C	E2	J2
Q382	G3	B2	R381	H3	A3	U346D	F2	J2
Q384	G3	B2	R382	G2	B2	U350A	F1	J2
			R383	G3	B2	U350B	E1	J2
R303	A4	E3	R384	G3	C2	U350C	F2	J2
R304	A3	E3	R385	G2	K1			

ASSEMBLY A17 — Partial Intensity Control Circuit Board (not pictured). See Figure 8-30

CIRCUIT NUMBER	SCHEM LOCATION	BOARD LOCATION	CIRCUIT NUMBER	SCHEM LOCATION	BOARD LOCATION	CIRCUIT NUMBER	SCHEM LOCATION	BOARD LOCATION
P1401	A3	B2	R1402	A3	B2			

ASSEMBLY A27 — A Trigger Light Circuit Board (not pictured)

CIRCUIT NUMBER	SCHEM LOCATION	BOARD LOCATION	CIRCUIT NUMBER	SCHEM LOCATION	BOARD LOCATION	CIRCUIT NUMBER	SCHEM LOCATION	BOARD LOCATION
DS342	E4	Not pictured	P346	E4	Not pictured			
DS345	E4	Not pictured						
DS346	E4	Not pictured						

ASSEMBLY A28 — B Trigger Light Circuit Board (not pictured)

CIRCUIT NUMBER	SCHEM LOCATION	BOARD LOCATION	CIRCUIT NUMBER	SCHEM LOCATION	BOARD LOCATION	CIRCUIT NUMBER	SCHEM LOCATION	BOARD LOCATION
DS352	F4	Not pictured	P366	F4	Not pictured			
DS355	F4	Not pictured						
DS356	F4	Not pictured						

CHASSIS MOUNTED PARTS (not pictured)

CIRCUIT NUMBER	SCHEM LOCATION	BOARD LOCATION	CIRCUIT NUMBER	SCHEM LOCATION	BOARD LOCATION	CIRCUIT NUMBER	SCHEM LOCATION	BOARD LOCATION
DS365	G4	Chassis	J396	H1	Chassis	P935	F5	Chassis
DS901	C1	Chassis	J399	H1	Chassis			
DS902	C1	Chassis						

http://manoman.sqhill.com

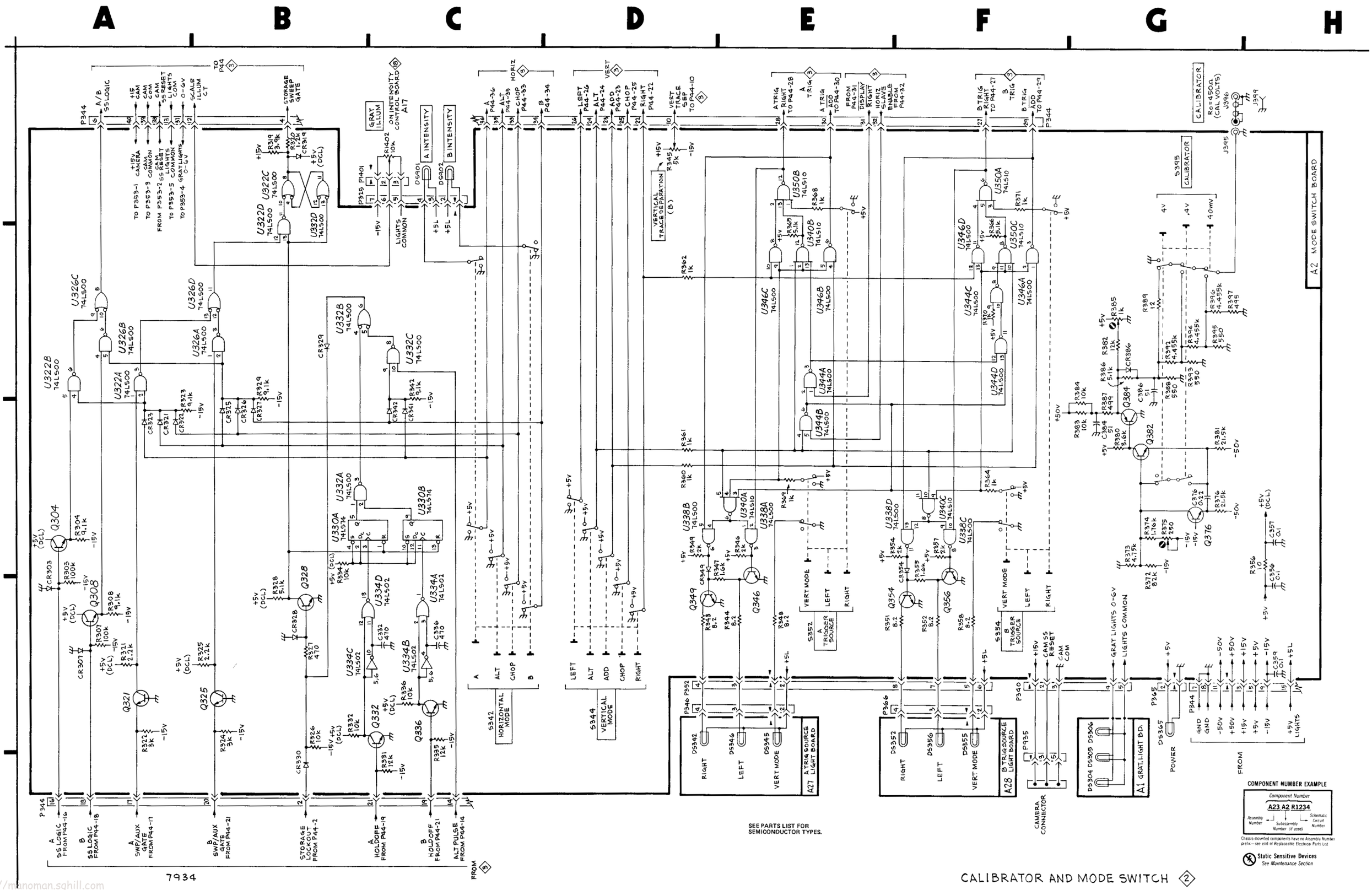

http://manoman.sqhill.com

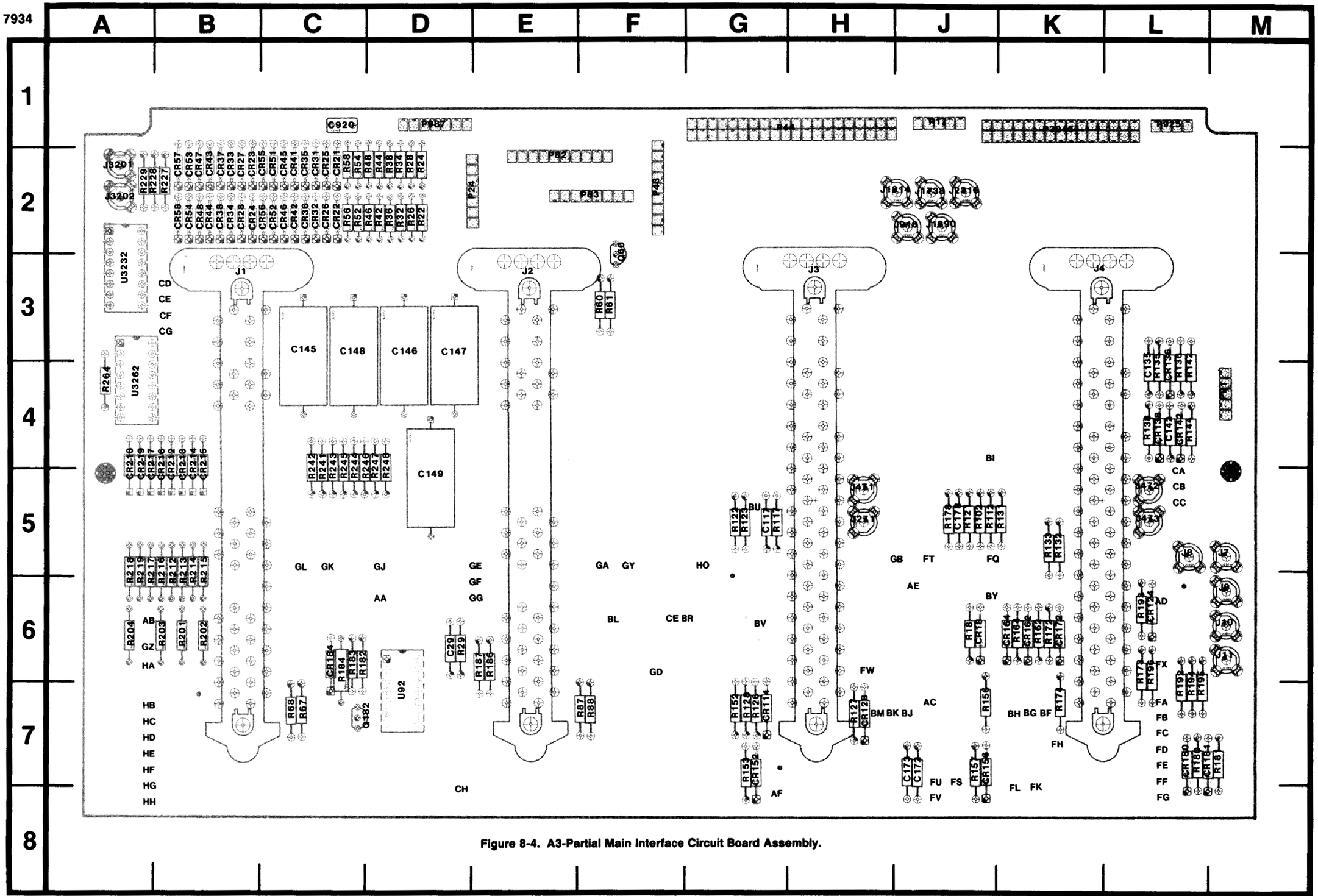

Figure 8-4. A3-Partial Main Interface Circuit Board Assembly.

http://manoman.sqhill.com

MAIN INTERFACE DIAGRAM 3

ASSEMBLY A3 — Partial Main Interface Circuit Board

CIRCUIT NUMBER	SCHEM LOCATION	BOARD LOCATION	CIRCUIT NUMBER	SCHEM LOCATION	BOARD LOCATION	CIRCUIT NUMBER	SCHEM LOCATION	BOARD LOCATION
C29	B4	D6	CR164	G4	K6	R52	F1	C2
C117	D3	G5	CR172	G3	K6	R54	F1	C2
C135	G3	L4	CR180	G3	L7	R56	F1	C2
C142	G3	L4	CR181	G4	M7	R58	F1	C2
C145	G2	C3	CR184	G4	C6	R60	B4	F3
C146	G2	D3				R61	B4	F3
C147	G2	D3	J1	B1	B3	R67	B4	C7
C148	H2	C3	J2	C1	E3	R68	B4	C7
C149	H2	D5	J3	E1	H3	R87	C4	F7
C172	G5	J7	J4	F1	K3	R88	D4	F7
C173	G5	J7	J7	H5	M5	R102	B2	J5
C178	G3	J5	J8	H5	L5	R112	C2	J5
			J9	H5	M6	R117	D3	G5
CR18	F3	J6	J10	H5	M6	R121	E2	J5
CR21	B1	C2	J11	H4	M6	R122	D3	G5
CR22	B1	C2	J270	E2	H5	R123	D3	G5
CR23	B1	B2	J271	E2	H5	R126	E4	G7
CR24	B1	B2	J472	F2	L5	R127	E4	H7
CR25	B1	C2	J473	F2	L5	R128	E4	G7
CR26	B1	C2	J1738	H2	J2	R131	G2	K5
CR27	B1	B2	J1814	A2	J2	R132	G3	K5
CR28	B1	B2	J2316	A2	J2	R133	G3	K5
CR31	C1	C2				R135	G3	L4
CR32	C1	C2	P17	H2	J1	R136	G3	L4
CR33	C1	B2	P24	A3	D2	R138	G3	L4
CR34	C1	B2	P43	A2	F2	R142	H3	L4
CR35	C1	C2	P44	A1	G1	R144	H3	L4
CR36	C1	C2	P44	A4	G1	R152	E5	G7
CR37	C1	B2	P44	B5	G1	R153	E5	G7
CR38	C1	B2	P44	H3	G1	R156	F4	J7
CR41	E1	C2	P44	H4	G1	R157	F4	J7
CR42	E1	C2	P82	H1	E2	R162	F4	K6
CR43	E1	B2	P83	H2	F2	R164	G4	K6
CR44	E1	B2	P91	H3	M4	R172	G3	K6
CR45	E1	C2	P925	H5	L1	R173	G4	L6
CR46	E1	C2	P987	A5	D1	R174	G4	K7
CR47	E1	B2	P3246	A4	K1	R178	G3	J5
CR48	E1	B2				R180	G3	L7
CR51	F1	C2	Q60	B4	F2	R181	G4	M7
CR52	F1	C2	Q182	G3	C7	R182	G3	C6
CR53	F1	B2	R18	E3	J6	R183	G4	C6
CR54	F1	B2	R22	B1	D2	R184	G4	C6
CR55	F1	C2	R24	B1	D2	R186	G3	E6
CR56	F1	C2	R26	B1	D2	R187	H3	E6
CR57	F1	B2	R28	B1	D2	R192	G5	L7
CR58	F1	B2	R29	B4	D6	R193	G5	L6
CR114	D3	G7	R32	C1	D2	R194	G5	L7
CR124	F3	L6	R34	C1	D2	R195	G4	L7
CR128	E4	H7	R36	C1	D2	R196	G5	L6
CR136	G3	L4	R38	C1	D2			
CR138	G3	L4	R42	E1	D2	U92A	H3	D7
CR142	H3	L4	R44	E1	D2	U92B	D4	D7
CR152	G5	G7	R46	E1	D2	U92C	D4	D7
CR156	G4	J7	R48	E1	D2	U92D	D4	D7
CR162	F4	K6						

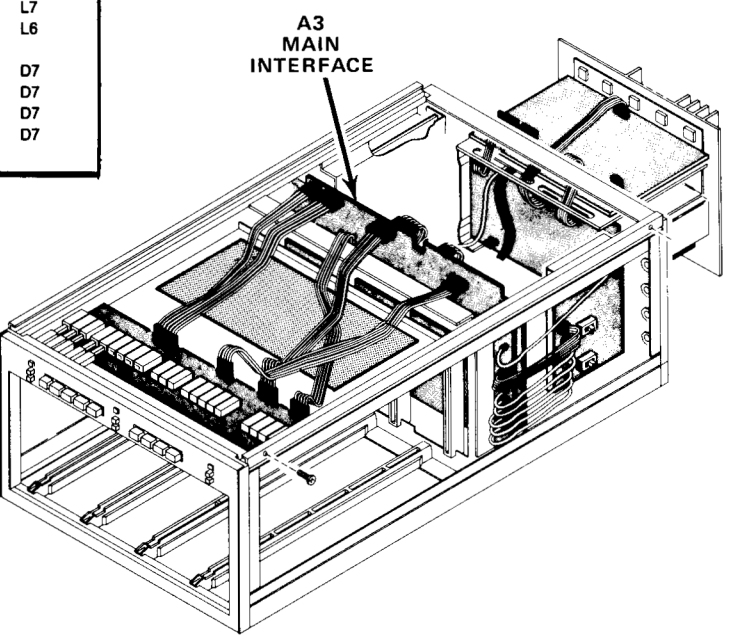

http://manoman.sqhill.com

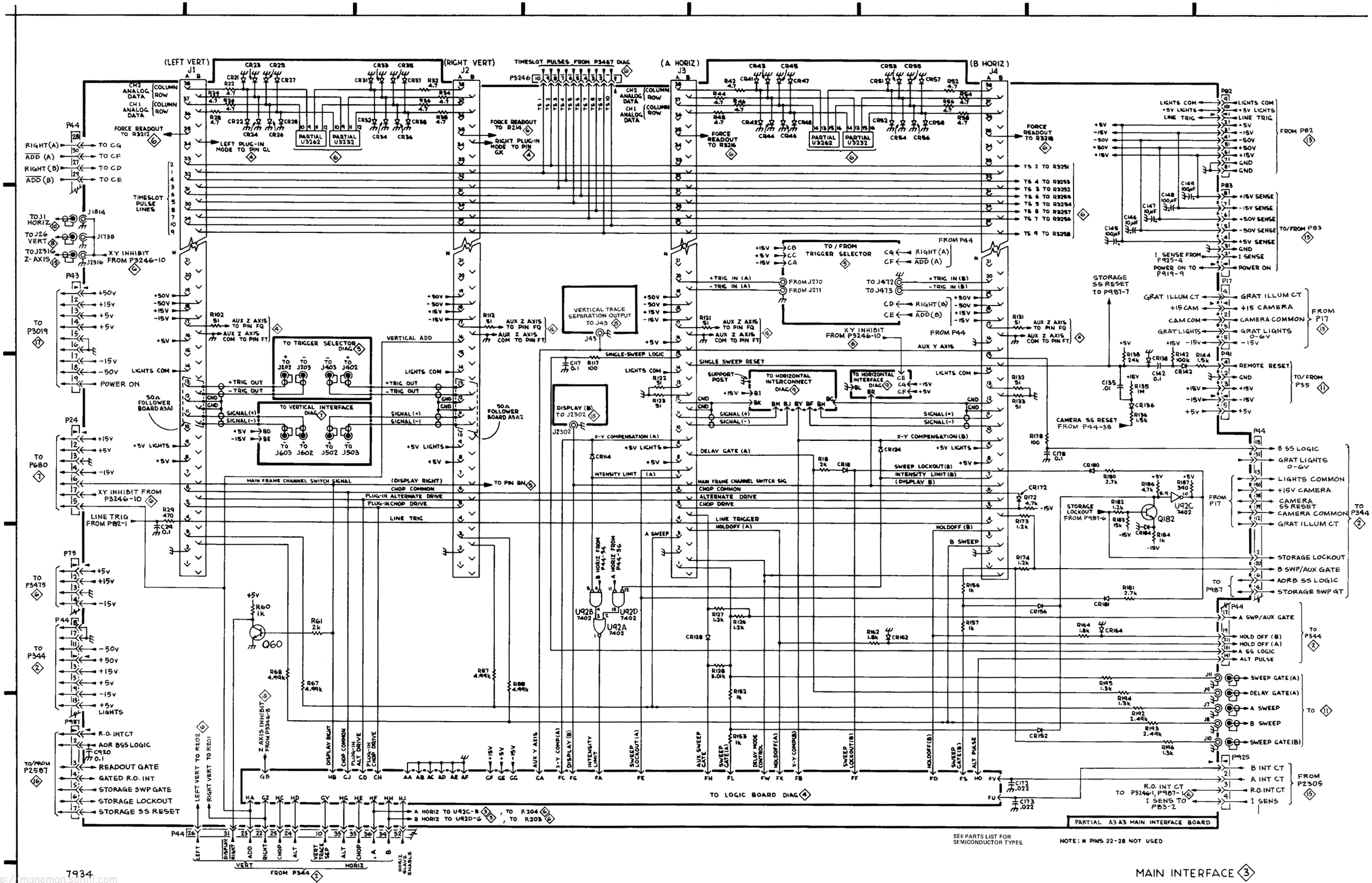
(LEFT VERT) J1
(RIGHT VERT) J2
(A HORIZ) J3
(B HORIZ) J4
TIMESLOT PULSES FROM P3467 DIAG
FORCE READOUT TO R3212
LEFT PLUG-IN MODE TO PIN GL
FORCE READOUT TO R214
RIGHT PLUG-IN MODE TO PIN GK
FORCE READOUT TO R3216
FORCE READOUT TO R3218
TIMESLOT PULSE LINES
XY INHIBIT FROM P3246-10
TO / FROM TRIGGER SELECTOR
FROM P44
VERTICAL TRACE SEPARATION OUTPUT TO J43
TO TRIGGER SELECTOR DIAG
TO VERTICAL INTERFACE DIAG
VERTICAL ADD
50Ω FOLLOWER BOARD A5A1
50Ω FOLLOWER BOARD A5A2
SINGLE-SWEEP LOGIC
SINGLE SWEEP RESET
DISPLAY (B) TO J2302
TO HORIZONTAL INTERCONNECT DIAG
TO HORIZONTAL INTERFACE DIAG
STORAGE SS RESET TO P987-7
CAMERA SS RESET FROM P44-38
STORAGE LOCKOUT FROM P987-6
MAIN FRAME CHANNEL SWITCH SIGNAL
CHOP COMMON
PLUG-IN ALTERNATE DRIVE
PLUG-IN CHOP DRIVE
LINE TRIG
LINE TRIGGER
HOLDOFF (A)
HOLDOFF (B)
A SWEEP
B SWEEP
TO LOGIC BOARD DIAG
PARTIAL A3A3 MAIN INTERFACE BOARD
SEE PARTS LIST FOR SEMICONDUCTOR TYPES.
NOTE: * PINS 22-28 NOT USED
MAIN INTERFACE 3
7934

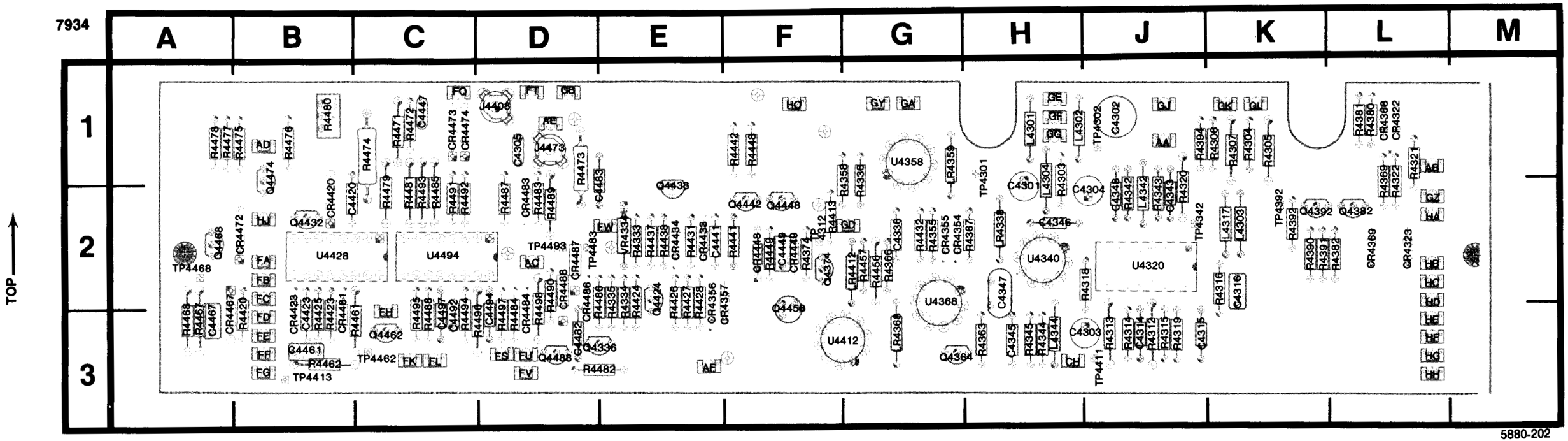

Figure 8-5. A6-Logic Circuit Board Assembly.

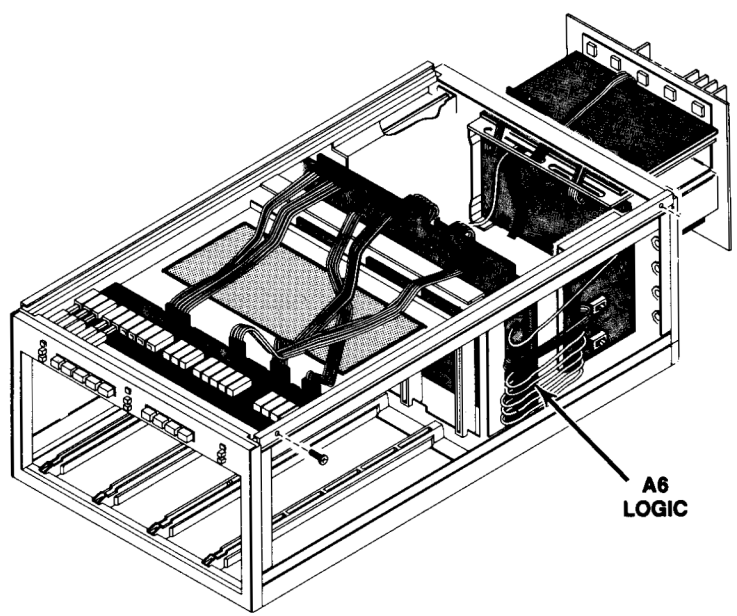

http://manoman.sqhill.com

ASSEMBLY A6 — Logic Circuit Board

CIRCUIT NUMBER	SCHEM LOCATION	BOARD LOCATION
C4301	G4	H2
C4302	G4	J1
C4303	G4	J3
C4304	G5	J2
C4305	G5	D1
C4314	B2	J3
C4315	B2	J3
C4316	B3	K2
C4336	C2	G2
C4343	C1	J2
C4345	C2	H3
C4346	C2	H2
C4347	C2	H2
C4348	C3	J2
C4420	C4	B2
C4423	D4	B3
C4441	F4	E2
C4447	C5	C1
C4449	G4	F2
C4461	E3	B3
C4467	E3	A3
C4482	B5	D3
C4483	B4	E1
C4492	E4	C3
C4494	E4	D3
C4497	E4	C3
CR4322	C1	L1
CR4323	C1	L2
CR4354	E2	G2
CR4355	E2	G2
CR4356	D2	E2
CR4357	D2	F2
CR4420	C4	B2
CR4423	D3	B3
CR4433	F4	E2
CR4434	F3	E2
CR4448	G4	F2
CR4449	G4	F2
CR4461	E3	B3
CR4467	E3	A3
CR4368	F1	L1
CR4369	F1	L2
CR4472	B5	B2
CR4473	C5	C1
CR4474	C5	C1
CR4483	B4	D2
CR4484	C5	D3
CR4486	D4	D2
CR4487	D4	D2
CR4488	D4	D2
J4408	G5	D1
J4473	A5	D1
L4301	G4	H1
L4302	G4	H1
L4303	G4	K2
L4304	G5	H1
L4317	B3	K2
L4342	C2	J2
L4344	C2	H3
LR4338	C2	H2
LR4359	E2	G1
LR4368	F2	G3
LR4412	G2	G2
Q4336	C3	E3
Q4364	E2	G3
Q4374	F1	F2
Q4382	G1	L2
Q4392	G1	K2
Q4424	D2	E2
Q4432	E3	B2
Q4438	F3	E2
Q4442	F4	F2
Q4448	G4	F2
Q4456	G4	F3
Q4462	F3	C3
Q4468	G3	A2
Q4474	B4	B1
Q4488	C5	D3
R4303	G5	H1
R4304	B2	K1
R4305	B2	K1
R4306	B2	K1
R4307	B2	K1
R4312	B3	J3
R4313	B3	J3
R4314	B3	J3
R4315	B3	J3
R4316	B3	K2
R4318	C2	J2
R4319	C2	J3
R4320	C1	J2
R4321	B1	L1
R4322	B1	L1
R4333	B3	E2
R4334	B3	E2
R4335	C3	E2
R4336	C2	G1
R4342	C1	J2
R4343	C2	J2
R4344	C2	H3
R4345	C2	H3
R4355	E2	G2
R4358	E3	G1
R4363	E2	H3
R4366	F2	G2
R4367	E2	H2
R4369	F1	L1
R4374	F1	F2
R4380	F1	L1
R4381	F1	L1
R4382	G1	L2
R4390	G1	K2
R4391	G1	K2
R4392	G1	K2
R4394	G2	J1
R4413	G2	F2
R4420	C4	B3
R4423	D3	B3
R4424	D2	E2
R4425	D4	B3
R4426	D3	E2
R4427	D2	E2
R4428	D2	E2
R4431	F3	E2
R4432	E2	G2
R4437	F4	E2
R4438	F3	E2
R4441	F4	F2
R4442	F4	F1
R4448	G3	F1
R4449	G4	F2
R4456	G4	G2
R4457	G3	G2
R4461	F3	B3
R4462	G3	B3
R4467	G3	A3
R4468	G3	A3
R4471	C5	C1
R4472	C5	C1
R4473	B5	D1
R4474	B4	C1
R4475	B4	B1
R4476	B5	B1
R4477	B4	A1
R4478	B4	A1
R4479	D5	C2
R4480	D4	B1
R4481	D4	C2
R4482	C5	E3
R4483	B4	D2
R4484	C5	D3
R4485	D4	C2
R4486	D4	D2
R4487	B4	D2
R4488	C5	C3
R4489	D4	D2
R4490	B5	D2
R4491	E4	C2
R4492	E4	C2
R4493	E4	C2
R4494	D5	C3
R4495	E5	C3
R4496	E5	C3
R4497	E5	D3
R4498	F5	D2
TP4301	G4	H1
TP4302	G4	J1
TP4312	G2	F2
TP4342	C2	J2
TP4392	G1	K2
TP4411	G1	J3
TP4413	F3	B3
TP4462	E3	C3
TP4468	F3	A2
TP4483	B4	D2
TP4493	E4	D2
U4320	B2	J2
U4340	C2	H2
U4358	D2	G1
U4368	E2	G2
U4412	F2	F3
U4428	D3	B2
U4494	E4	C2
VR4334	B3	E2

CHASSIS MOUNTED PARTS (not pictured)

CIRCUIT NUMBER	SCHEM LOCATION	BOARD LOCATION
J4472	A5	Chassis

http://manoman.sqhill.com

VOLTAGE CONDITIONS

The voltages shown were obtained with the 7934 controls set as follows:

Front panel controls (knob type) at midrange; VERTICAL MODE, LEFT; TRIGGER SOURCE, VERT MODE; NON STORE button, in HORIZONTAL MODE A. No plug-in units are installed.

Voltage Conditions. The voltages shown on the diagram were obtained using a digital multimeter with a 10 MΩ input impedance (Tektronix DM501 Digital Multimeter or Tektronix 7D13 Digital Multimeter used with readout equipped, 7000-series oscilloscope).

WARNING

Dangerous potentials exist at several points throughout this instrument. When the instrument is operated with the covers removed, do not touch exposed connections or components. Some transistors have voltages present on their cases. Disconnect the power source before replacing parts.

http://manoman.sqhill.com

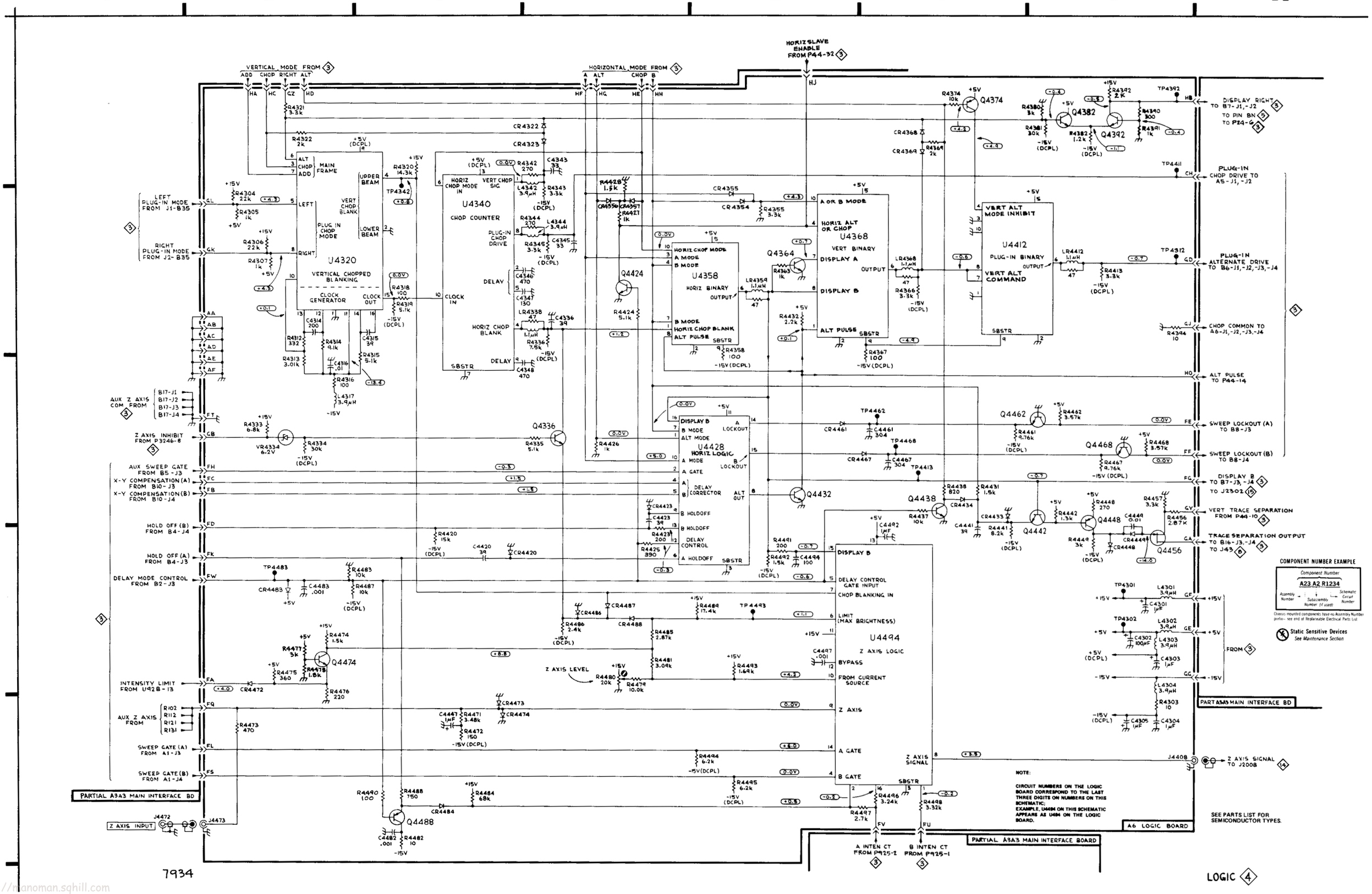

http://manoman.sqhill.com

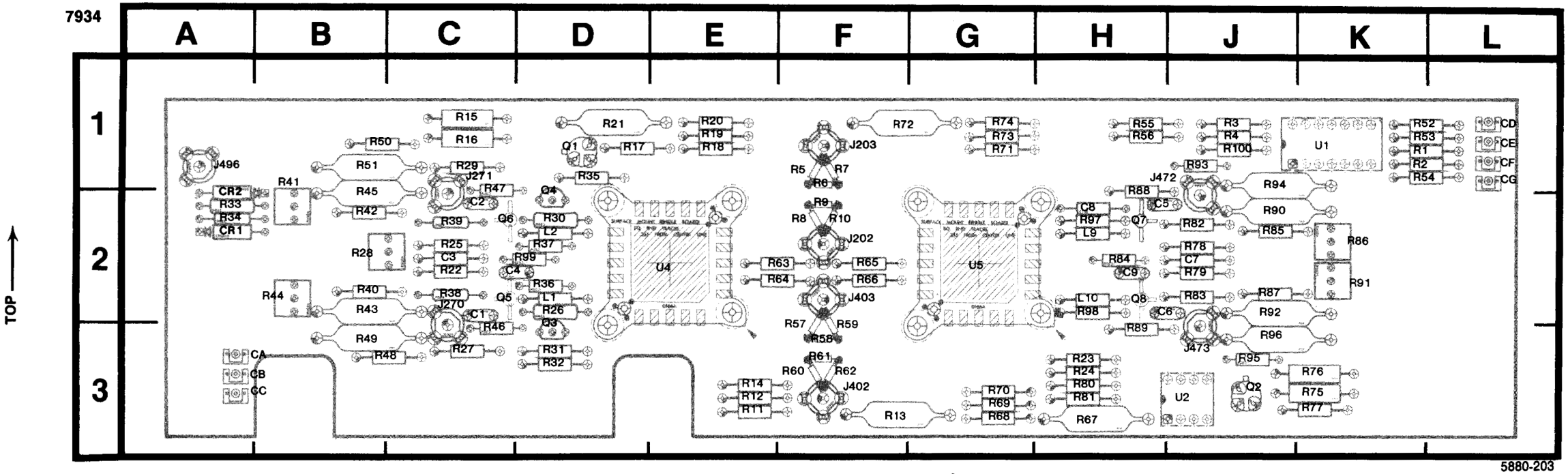

Figure 8-6. A7-Trigger Selector Circuit Board Assembly.

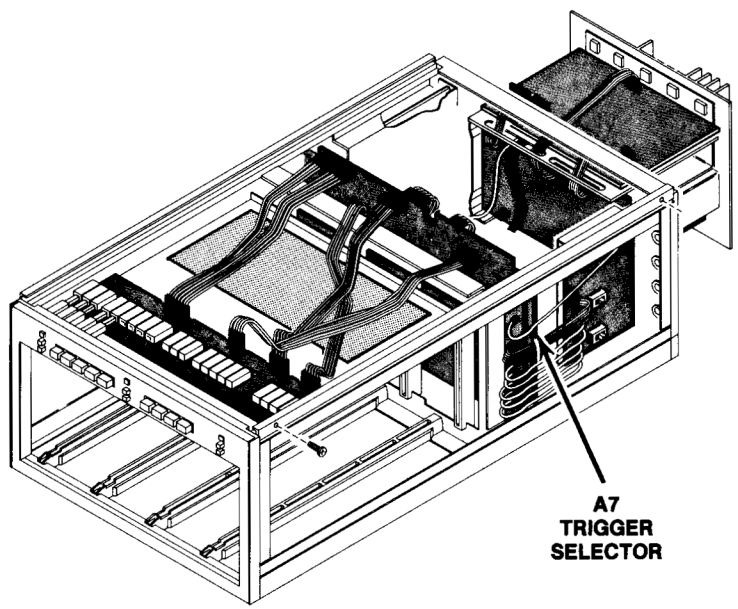

http://manoman.sqhill.com

ASSEMBLY A7 — Trigger Selector Circuit Board

CIRCUIT NUMBER	SCHEM LOCATION	BOARD LOCATION	CIRCUIT NUMBER	SCHEM LOCATION	BOARD LOCATION	CIRCUIT NUMBER	SCHEM LOCATION	BOARD LOCATION
C1	E4	C2	R13	C3	F3	R62	B1	F3
C2	E5	C2	R14	D4	E3	R63	C2	F2
C3	E4	C2	R15	D4	C1	R64	C2	F2
C4	E4	D2	R16	D4	C1	R65	C2	F2
C5	E1	H2	R17	D4	D1	R66	C2	F2
C6	E2	J2	R18	C5	E1	R67	C1	H3
C7	E2	J2	R19	C5	E1	R68	C1	G3
C8	E2	H2	R20	D5	E1	R69	D1	G3
C9	E2	H2	R21	C5	D1	R70	D1	G3
			R22	D4	C2	R71	C3	G1
CR1	E3	A2	R23	D4	H3	R72	C3	F1
CR2	F3	A2	R24	D4	H3	R73	D3	G1
			R25	D5	C2	R74	D3	G1
J202	A2	F2	R26	E3	D2	R75	D2	K3
J203	A1	F1	R27	E3	C3	R76	D2	K3
J270	F1	C2	R28	E3	B2	R77	D2	K3
J271	F2	C1	R29	E3	C1	R78	D2	J2
J402	A5	F3	R30	E3	D2	R79	D2	J2
J403	A5	F2	R31	E3	D3	R80	D2	H3
J472	F4	J1	R32	E3	D3	R81	D2	H3
J473	F5	J3	R33	F3	A2	R82	E2	J2
J496	F3	A1	R34	F3	A2	R83	E2	J2
			R35	E3	D1	R84	E2	H2
L1	D4	D2	R36	E4	D2	R85	E2	J2
L2	D5	D2	R37	E5	D2	R86	E2	K2
L9	D2	H2	R38	E4	C2	R87	E2	J2
L10	D2	H2	R39	E4	C2	R88	E1	H2
			R40	E4	B2	R89	E2	H1
Q1	D4	D1	R41	E4	B2	R90	E2	J2
Q2	D2	J3	R42	E4	B2	R91	E2	K2
Q3	E3	D3	R43	E4	B2	R92	E2	J2
Q4	E3	D2	R44	E4	B2	R93	F1	J1
Q5	E4	C2	R45	E4	B2	R94	F1	J1
Q6	E5	C2	R46	E4	C3	R95	F2	J3
Q7	E1	H2	R47	E5	C1	R96	F2	J3
Q8	E2	H2	R48	F4	C3	R97	E2	H2
			R49	F4	B3	R98	E2	H2
R1	B2	K1	R50	F5	B1	R99	E4	D2
R2	B2	K1	R51	F5	B1	R100	B4	J1
R3	B4	J1	R52	B4	K1			
R4	B4	J1	R53	B4	K1	U1A	B2	K1
R5	B5	F1	R54	B2	K1	U1B	A2	K1
R6	B5	F1	R55	B2	H1	U1C	A4	K1
R7	B5	F1	R56	B2	H1	U1D	B4	K1
R8	B5	F2	R57	C2	F3	U2A	D2	J3
R9	B5	F2	R58	C1	F3	U2B	D4	J3
R10	B5	F2	R59	C2	F3	U4	D4	E2
R11	C4	E3	R60	B1	F3	U5	D1	G2
R12	D4	E3	R61	B1	F3			

CHASSIS MOUNTED PARTS (not pictured)

CIRCUIT NUMBER	SCHEM LOCATION	BOARD LOCATION	CIRCUIT NUMBER	SCHEM LOCATION	BOARD LOCATION	CIRCUIT NUMBER	SCHEM LOCATION	BOARD LOCATION
J549	G3	Chassis						

http://manoman.sqhill.com

VOLTAGE CONDITIONS

The voltages shown were obtained with the 7934 controls set as follows:

Front panel controls (knob type) at midrange; VERTICAL MODE, LEFT; TRIGGER SOURCE, VERT MODE; NON STORE button, in HORIZONTAL MODE A. No plug-in units are installed.

Voltage Conditions. The voltages shown on the diagram were obtained using a digital multimeter with a 10 MΩ input impedance (Tektronix DM501 Digital Multimeter or Tektronix 7D13 Digital Multimeter used with readout equipped, 7000-series oscilloscope).

WARNING

Dangerous potentials exist at several points throughout this instrument. When the instrument is operated with the covers removed, do not touch exposed connections or components. Some transistors have voltages present on their cases. Disconnect the power source before replacing parts.

http://manoman.sqhill.com

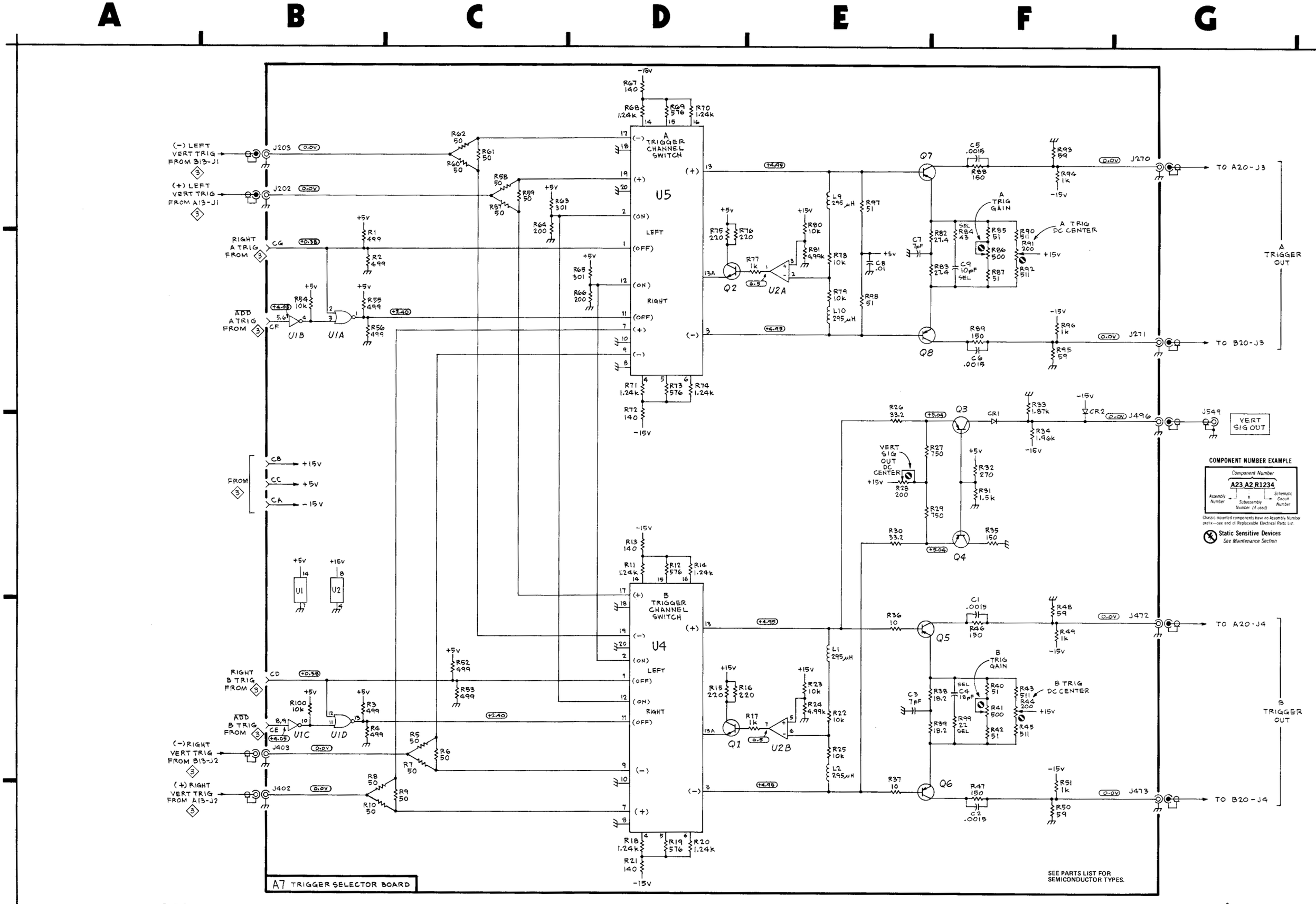

7934

TRIGGER SELECTOR 5

http://manoman.sqhill.com

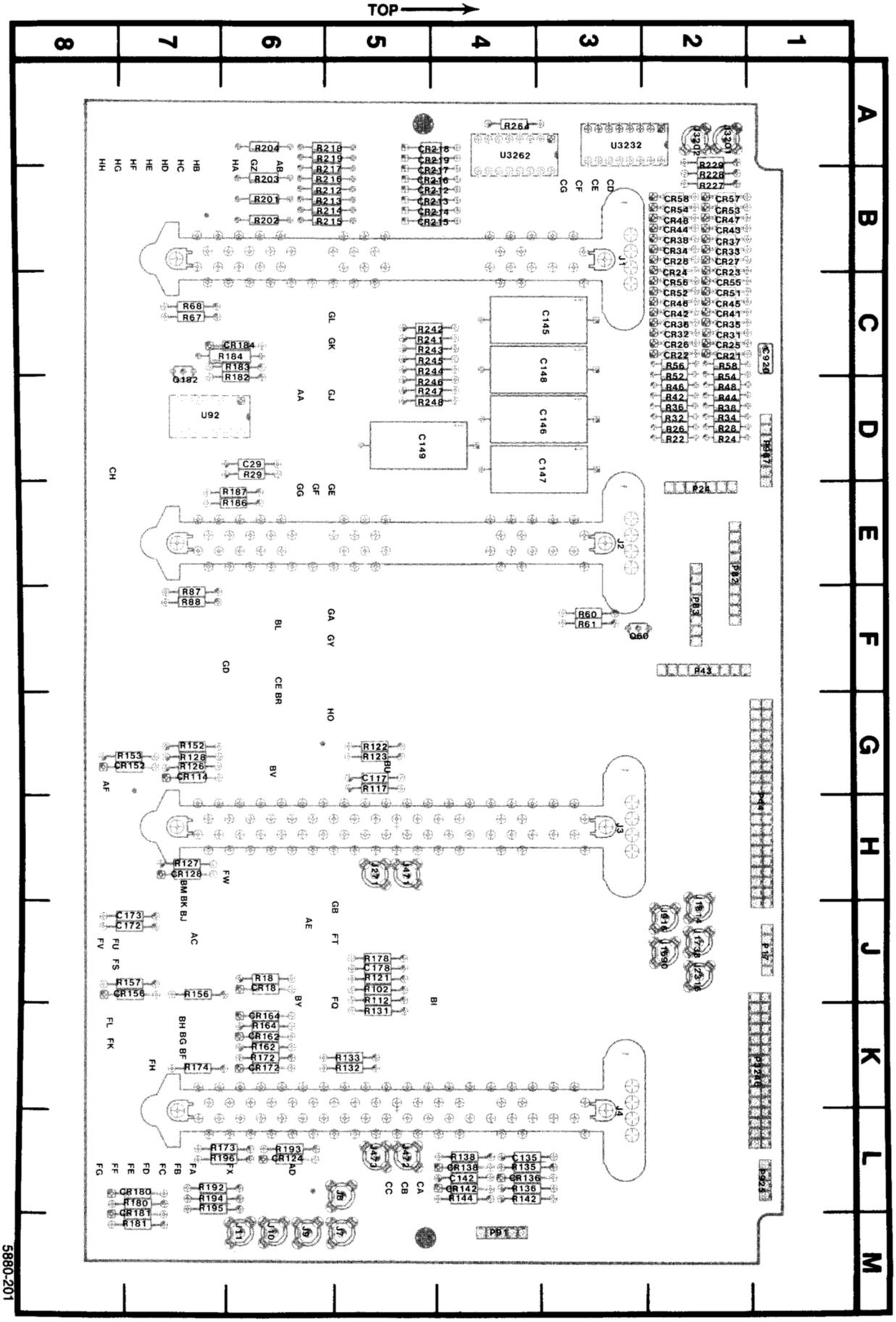

Figure 8-8. A3-Main Interface Circuit Board Assembly.

http://manoman.sqhill.com

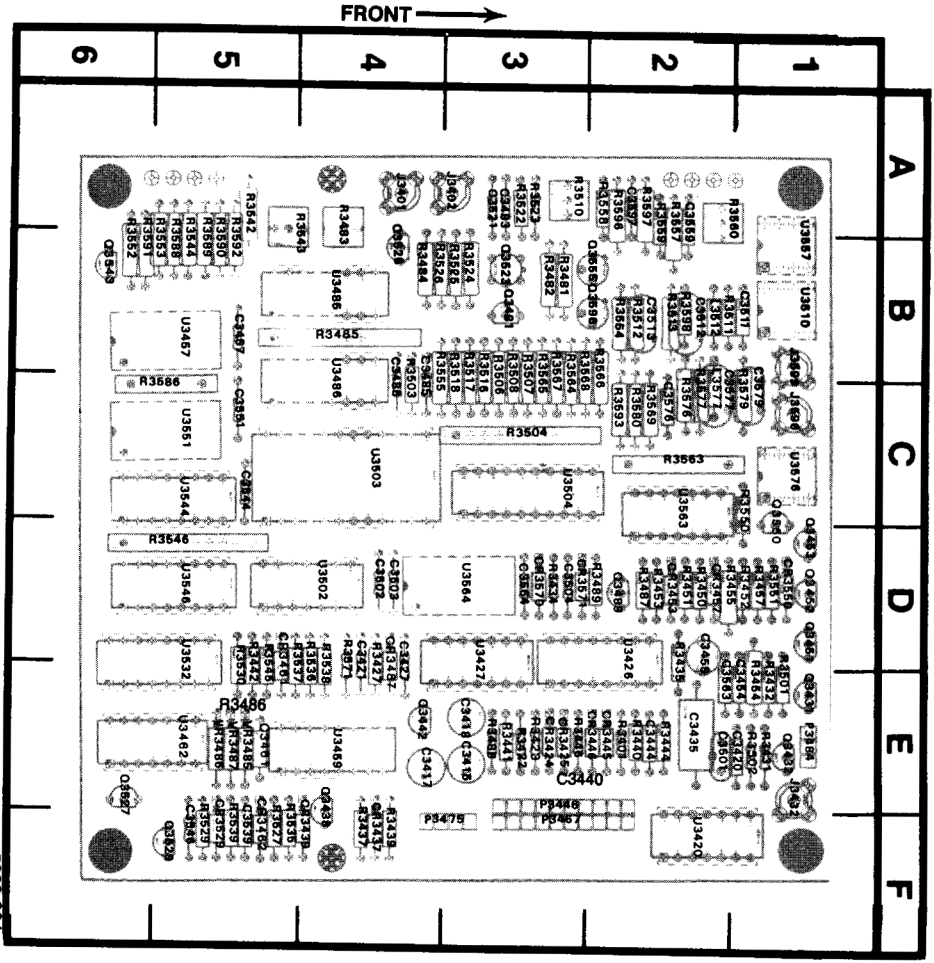

5880-204

Figure 8-7. A13-Readout Circuit Board Assembly.

http://manoman.sqhill.com

READOUT SYSTEM DIAGRAM 6

ASSEMBLY A3 — Partial Main Interface Circuit Board

CIRCUIT NUMBER	SCHEM LOCATION	BOARD LOCATION	CIRCUIT NUMBER	SCHEM LOCATION	BOARD LOCATION	CIRCUIT NUMBER	SCHEM LOCATION	BOARD LOCATION
CR212	A4	B4	R201	A4	B6	R229	B3	A2
CR213	A4	B4	R202	B4	B6	R241	B5	C4
CR214	B4	B4	R203	B4	B6	R242	B5	C4
CR215	B4	B4	R204	B4	B6	R243	B5	C4
CR216	B4	B4	R212	A4	B5	R244	B5	C4
CR217	B4	A4	R213	A4	B5	R245	B5	C4
CR218	B4	A4	R214	A4	B5	R246	B5	D4
CR219	B4	A4	R215	B4	B5	R247	B5	D4
			R216	B4	B5	R248	B5	D4
J3201	C5	A2	R217	B4	A5	R264	C5	A4
J3202	C3	A2	R218	B4	A5			
			R219	B4	A5	U3232	C3	A3
P3246	C1	K1	R227	B3	B2	U3262	B4	A4
P3246	C3	K1	R228	B3	B2			
P3246	C4	K1						

ASSEMBLY A13 — Readout Circuit Board

CIRCUIT NUMBER	SCHEM LOCATION	BOARD LOCATION	CIRCUIT NUMBER	SCHEM LOCATION	BOARD LOCATION	CIRCUIT NUMBER	SCHEM LOCATION	BOARD LOCATION
C3415	H4	E3	Q3453	E1	D1	R3544	E5	B5
C3417	H4	E4	Q3481	D3	B3	R3545	E5	E5
C3418	H4	E3	Q3489	F2	D2	R3546	E4	D5
C3420	A1	E1	Q3523	D4	B3	R3550	F2	C1
C3421	H4	E4	Q3526	D4	B4	R3551	G2	D1
C3427	C2	E4	Q3527	D4	E6	R3552	G2	B6
C3435	B1	E2	Q3529	E4	F5	R3553	G2	B5
C3440	C2	E5	Q3543	E5	B6	R3554	G2	B2
C3444	B2	E2	Q3550	F2	D1	R3555	G2	C4
C3454	E1	E1	Q3555	G2	B2	R3557	H2	A2
C3455	E1	D2	Q3596	G4	B2	R3558	H2	A2
C3457	H4	B5				R3559	H2	A2
C3461	D2	E5	R3401	A1	E2	R3560	H2	A2
C3483	D3	A3	R3422	A3	E3	R3563	G2	C2
C3485	E3	C4	R3423	A2	E3	R3564	G2	C3
C3486	H4	C4	R3427	C2	E4	R3565	G2	C3
C3501	F1	E2	R3431	B1	E1	R3566	G3	C2
C3502	H4	D4	R3432	B1	E1	R3567	G3	C3
C3503	H4	D4	R3434	B1	D3	R3568	G3	C3
C3504	H4	D3	R3435	B1	E2	R3569	G3	C2
C3511	G1	B1	R3437	D1	F4	R3571	F3	E4
C3512	H1	B2	R3439	D1	F4	R3576	G3	C2
C3513	H1	B2	R3440	C2	E2	R3577	G4	C2
C3521	D4	A3	R3441	C2	E3	R3579	G3	C1
C3539	D5	F5	R3442	D1	E5	R3580	G4	C2
C3544	E4	C5	R3444	B2	E2	R3586	G5	C5
C3546	H4	F6	R3446	B2	E3	R3588	G5	B5
C3551	H4	C5	R3450	E1	C2	R3589	G5	B5
C3559	H2	A2	R3451	E1	C2	R3590	G5	B5
C3563	H4	E2	R3452	E1	D1	R3591	G5	B6
C3564	H4	D3	R3453	E1	C2	R3592	G5	B5
C3576	G4	C2	R3454	E1	E1	R3593	G5	C2
C3577	G4	C2	R3455	E1	D2	R3596	H4	A2
C3579	G4	C1	R3457	E2	D1	R3597	H5	A2
C3597	H5	A2	R3481	D3	B3	R3598	H5	B2
			R3482	D3	B3	U3420A	A1	F2
CR3424	A3	E3	R3483	D3	B4	U3420B	A1	F2
CR3425	B3	E3	R3484	D3	B4	U3420C	A1	F2
CR3437	D1	F3	R3485	E3	B4	U3420D	A2	F2
CR3439	D1	F3	R3486	F3	//	U3426	B1	E2
CR3445	B2	E2	R3487	F3	C2	U3427A	C2	E3
CR3446	B2	E2	R3488	F2	E3	U3427B	C2	E3
CR3453	E1	D2	R3489	F2	C2	U3457A	F5	B5
CR3457	E2	D2	R3501	F1	E1	U3457B	E2	B5
CR3461	D2	E5	R3502	F1	E1	U3457C	F5	B5
CR3462	D2	F6	R3503	F1	C4	U3457D	F3	B5
CR3487	F2	E4	R3504	G1	C3	U3459	D2	E4
CR3529	E4	F6	R3506	G1	C3	U3462B	D2	E5
CR3550	G2	D1	R3507	G1	C3	U3485	E3	B4
CR3570	F3	D3	R3508	G1	C3	U3486	F3	C4
CR3571	F3	D3	R3510	H1	A3	U3502A	F3	D4
			R3511	G1	B2	U3502B	F1	D4
J3401	C5	A4	R3512	H1	B2	U3503	F1	C4
J3402	C3	A3	R3513	H1	B2	U3504	G1	C3
J3432	C1	E1	R3516	G1	C3	U3510A	G1	B1
J3596	H4	C1	R3517	G2	C3	U3510B	H1	B1
J3599	H2	B1	R3518	G2	C3	U3532	D5	E5
			R3522	D4	A3	U3544	E5	C5
L3577	G3	C2	R3523	D4	A3	U3546	F4	D5
			R3524	D4	B3	U3551A	G2	C5
P3446	A1	F3	R3525	D4	B3	U3551B	F5	C5
P3446	C3	F3	R3526	D4	B4	U3551C	E5	C5
P3467	H5	F3	R3527	D4	F6	U3551D	F5	C5
P3475	H3	F3	R3529	E4	F6	U3557A	H2	B1
P3484	D3	E1	R3530	E4	E5	U3557B	H4	B1
			R3535	D5	F6	U3563A	G2	C2
Q3431	B1	E1	R3536	D5	E4	U3563B	G3	C2
Q3432	B1	E1	R3537	D5	E5	U3564	G3	D4
Q3438	D1	F4	R3538	D5	E4	U3576A	G4	C1
Q3442	D2	E4	R3539	D5	F6	U3576B	G4	C1
Q3451	E1	D1	R3542	E4	A5			
Q3452	E1	D1	R3543	E4	B5	VR3485	E2	E5
						VR3486	E2	E5
						VR3487	E2	E5

http://manoman.sqhill.com

VOLTAGE AND WAVEFORM CONDITIONS

The voltages and waveforms shown were obtained with the **7934** controls set as follows:

Front panel controls (knob type) at midrange; VERTICAL MODE, LEFT; TRIGGER SOURCE, VERT MODE; NON STORE button, in.

Voltage Conditions. The voltages shown on the diagram were obtained using a digital multimeter with a 10 MΩ input impedance (Tektronix DM501 Digital Multimeter or Tektronix 7D13 Digital Multimeter used with readout equipped, 7000-series oscilloscope).

Waveform Conditions. The waveforms shown below were obtained using a test oscilloscope system with 10 MΩ input impedance and at least 60 MHz bandwidth. The test oscilloscope is externally triggered through a 1X probe connected to TP3450 on the 7834 A13 Readout circuit board. (Tektronix 7603 Oscilloscope 7B53A Time Base, and 7A13 Differential Comparator equipped with a 10X probe.) The 7B53A Time Base plug-in unit is installed in the mainframe A HORIZ compartment. The 7B53A is set for internal auto-trigger and 0.5 millisecond/division sweep rate.

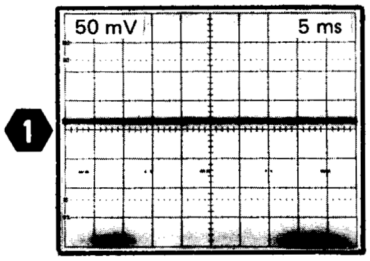

1 — 4.3 V

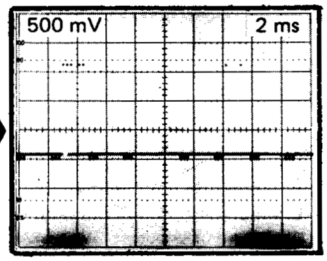

2 — 0 V

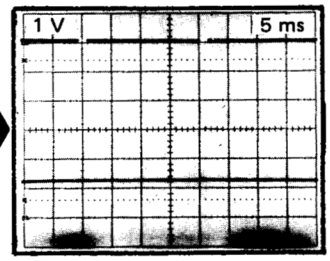

3 — 2 V

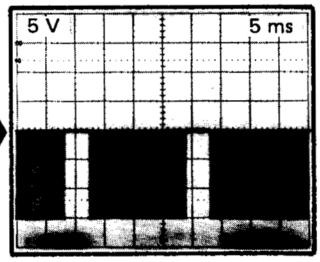

4 — 0 V

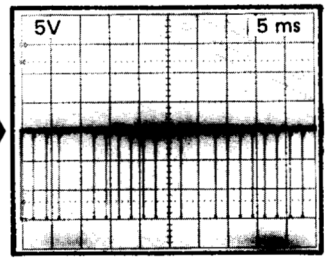

6 — 0 V

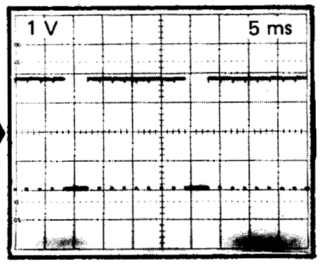

7 — 2 V

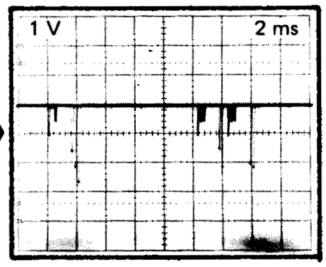

8 — 13 V

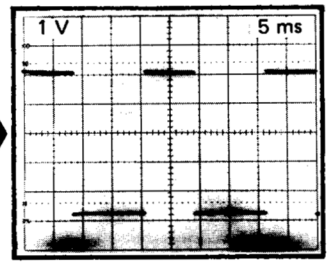

9 — 3 V

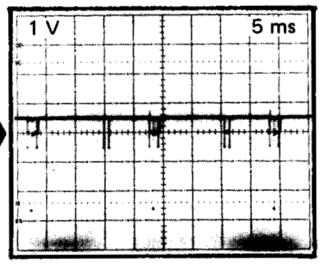

10 — 14 V

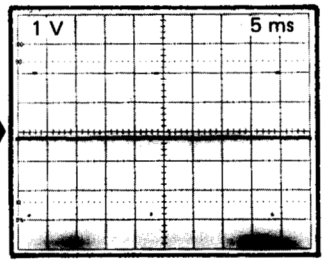

11 — 3 V

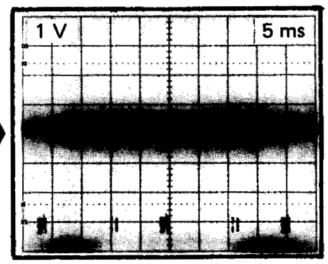

12 — 0 V

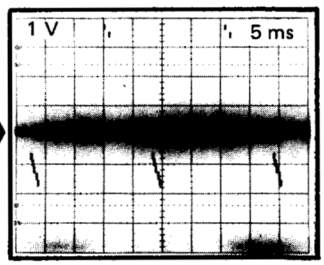

13 — 0 V

1988-64

WARNING

Dangerous potentials exist at several points throughout this instrument. When the instrument is operated with the covers removed, do not touch exposed connections or components. Some transistors have voltages present on their cases. Disconnect the power source before replacing parts.

http://manoman.sqhill.com

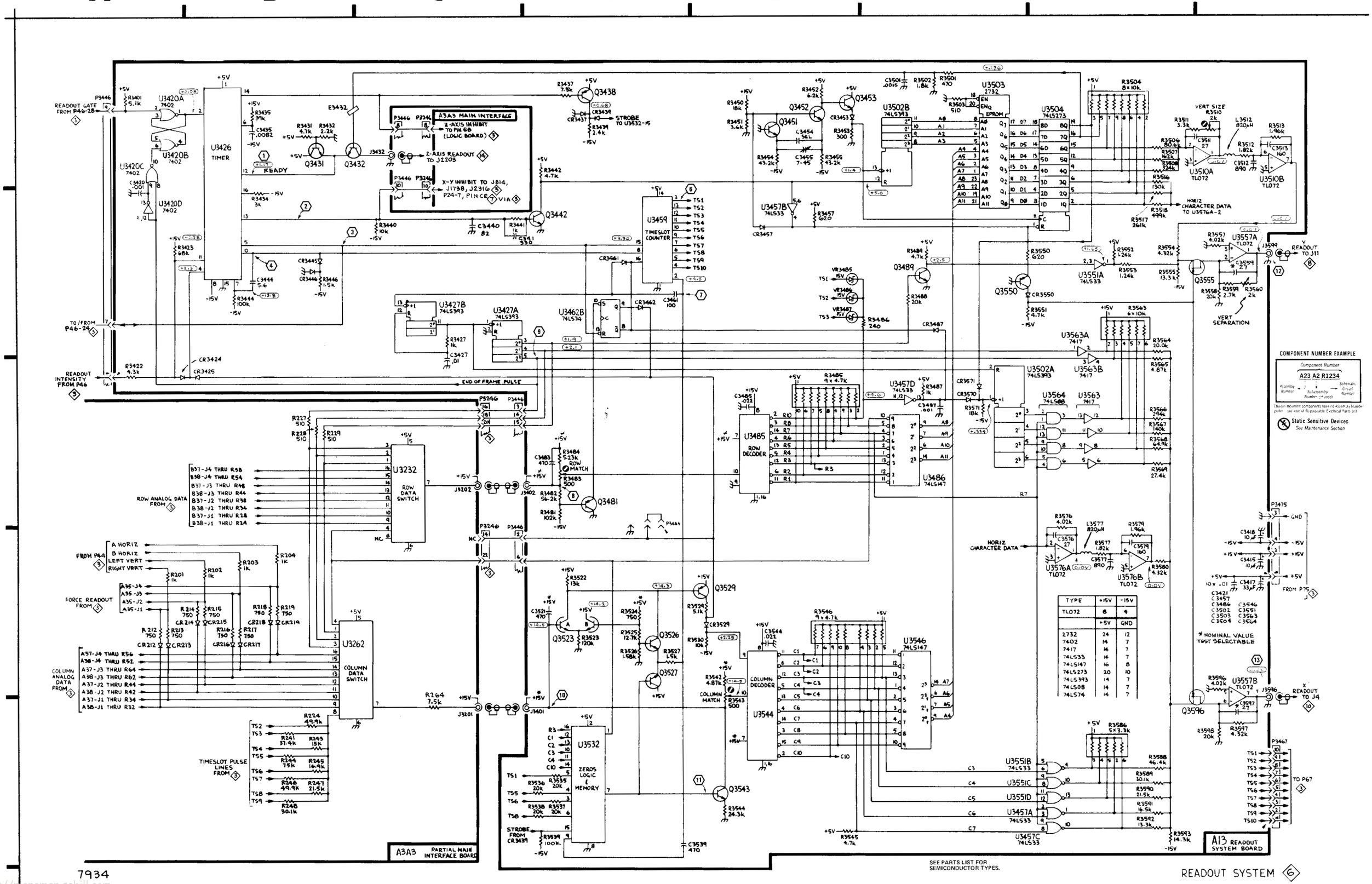

TYPE	+15V	-15V
TL072	8	4
	+5V	GND
2732	24	12
7402	14	7
7417	14	7
74LS33	14	7
74LS147	16	8
74LS273	20	10
74LS393	14	7
74LS08	14	7
74LS74	14	7

http://manoman.sqhill.com

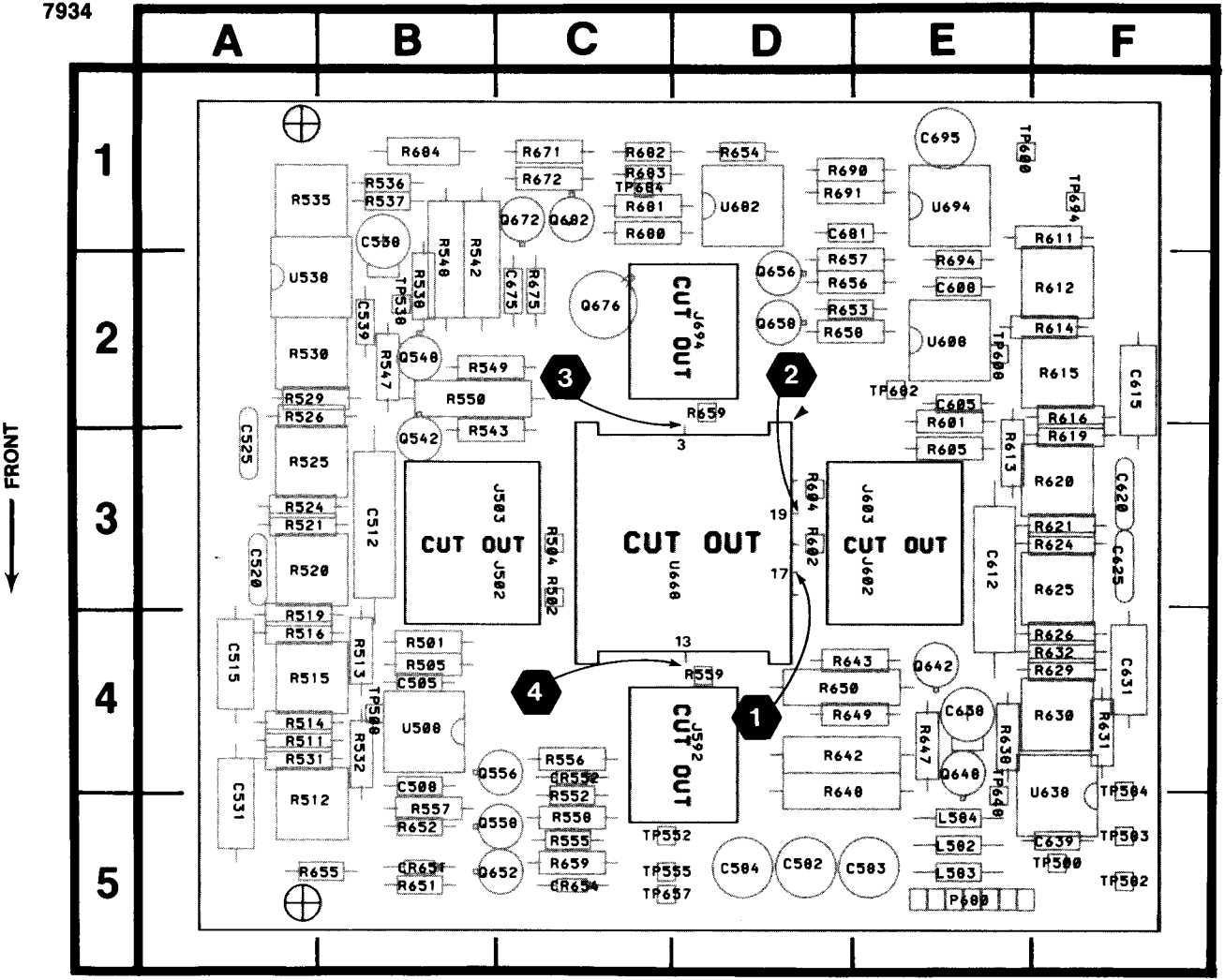

4593-810

Figure 8-9. A8-Vertical Interface Circuit Board Assembly.

http://manoman.sqhill.com

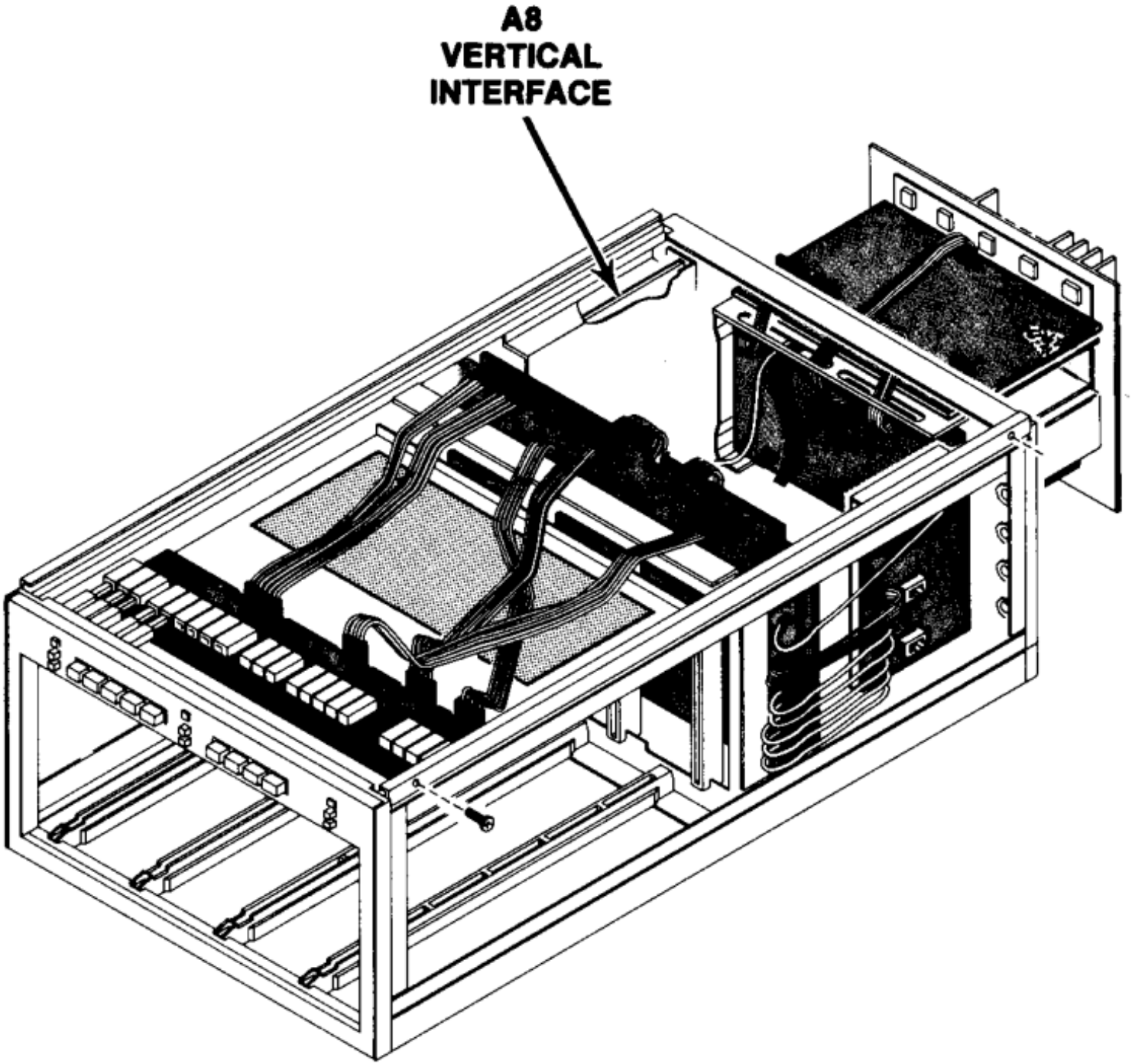

http://manoman.sqhill.com

ASSEMBLY A8 — Vertical Interface Circuit Board

CIRCUIT NUMBER	SCHEM LOCATION	BOARD LOCATION	CIRCUIT NUMBER	SCHEM LOCATION	BOARD LOCATION	CIRCUIT NUMBER	SCHEM LOCATION	BOARD LOCATION
C505	B5	B4	R501	B5	B4	R632	F3	F4
C508	A2	B4	R502	B5	C3	R638	G3	E4
C512	B5	B3	R504	B5	C3	R642	G3	D4
C515	B5	A4	R505	B5	B4	R643	F3	D4
C520	B4	A3	R511	A5	A4	R646	D4	G5
C525	B4	A3	R512	B5	A5	R647	G3	E4
C531	B3	A5	R513	B5	B4	R648	G3	D4
C538	A3	B1	R514	A4	A4	R649	F3	D4
C539	A1	B2	R515	B5	A4	R650	E3	D4
C582	G5	D5	R516	B5	A4	R651	E5	B5
C583	H5	E5	R519	A4	A4	R652	E5	B5
C584	H5	D5	R520	B4	A3	R653	E5	D2
C605	F5	E2	R521	B4	A3	R654	D4	D1
C608	F1	E2	R524	A4	A3	R655	D4	A5
C612	G5	E3	R525	B4	A3	R656	E4	D2
C615	G5	F2	R526	B4	A2	R657	E4	D2
C620	G4	F3	R529	A3	A2	R658	E4	D2
C625	G4	F3	R530	B4	A2	R659	E2	C5
C631	F3	F4	R531	B3	A4	R671	D1	C1
C638	G3	E4	R532	B3	B4	R672	E1	C1
C639	F1	F5	R535	A5	A1	R675	D1	C2
C675	D1	C2	R536	A5	B1	R680	D2	C1
C681	D2	D1	R537	A5	B1	R681	D2	C1
C695	H1	E1	R538	A3	B2	R682	D2	C1
			R542	A3	B2	R683	D1	C1
CR552	D5	C4	R543	B3	B3	R684	C1	B1
CR651	E5	B5	R547	A3	B2	R690	H2	D1
CR654	E5	C5	R548	A3	B2	R691	H2	D1
			R549	B3	B2	R694	H2	E2
J502	C6	C3	R550	C3	B2			
J503	B6	C3	R552	D5	C4	TP500	H5	B4
J592	C2	D4	R555	D4	C5	TP508	B5	B4
J602	F6	E3	R556	D4	C4	TP538	A3	B2
J603	E6	E3	R557	C4	B5	TP552	D5	C5
J694	E2	D2	R558	C4	C5	TP555	D5	C5
			R559	C2	D4	TP582	G5	F5
L582	G6	E5	R601	F5	E2	TP583	G5	F5
L583	H6	E5	R602	F5	D3	TP584	H5	F4
L584	H6	E5	R604	F5	D3	TP600	H5	E1
			R605	F5	E3	TP608	F5	E2
P680	D6	E5	R611	G5	F1	TP648	G3	E4
P680	G6	E5	R612	F5	F2	TP657	E5	C5
			R613	F5	E3	TP682	D2	E2
Q542	B3	B3	R614	G5	F2	TP684	D1	C1
Q548	B3	B2	R615	F5	F2	TP694	H1	F1
Q556	D4	B4	R616	F5	F2			
Q558	C4	C5	R619	G4	F3	U508	A2	B4
Q642	G3	E4	R620	F4	F3	U508	B5	B4
Q648	G3	E4	R621	F4	F3	U538	A1	A2
Q652	E5	C5	R624	G4	F3	U538	A3	A2
Q656	E4	D2	R625	F4	F3	U608	F5	E2
Q658	E4	D2	R626	F4	F4	U638	G3	F4
Q672	E1	C1	R629	G3	F4	U668	B2	D3
Q676	D1	C2	R630	F4	F4	U682	D1	D1
Q682	D1	C1	R631	F3	F4	U694	H2	E1

CHASSIS MOUNTED PARTS (not pictured)

CIRCUIT NUMBER	SCHEM LOCATION	BOARD LOCATION	CIRCUIT NUMBER	SCHEM LOCATION	BOARD LOCATION	CIRCUIT NUMBER	SCHEM LOCATION	BOARD LOCATION
DL5	C1	Chassis	J89	C1	Chassis			
DL5	E1	Chassis	J90	C1	Chassis			

http://manoman.sqhill.com

VOLTAGE AND WAVEFORM CONDITIONS

The voltages and waveforms shown were obtained with the 7934 front panel variable controls at midrange except A INTENSITY control is set counterclockwise; voltmeter ground is connected to chassis ground; VERTICAL MODE, LEFT; TRIGGER SOURCE, VERT MODE; HORIZONTAL MODE, B; and READOUT OFF.

Voltage Conditions. The voltages shown on the diagram were obtained using a digital multimeter with a 10 MΩ input impedance (TEKTRONIX DM 501A Digital Multimeter or TEKTRONIX 7D13A Digital Multimeter used with a readout-equipped 7000-series oscilloscope).

Waveform Conditions. The waveforms shown below were obtained using a test oscilloscope system with 10 MΩ input impedance and at least 60 MHz bandwidth. (TEKTRONIX 7603 Oscilloscope, 7B53A Time Base, and 7A13 Differential Comparator equipped with a 10X probe.) The test oscilloscope was externally triggered from the Pretrig Out connector of a 067-0587-02 Calibration Fixture installed in the 7904A LEFT VERT compartment. Calibration Fixture was set: +Step Resp (Vert), 10 kHz Rep Rate, and 2 divisions of vertical display centered at 0 volts. The test oscilloscope time base installed in the B HORIZ compartment was set: free-running sweep (not triggered), 50 ns/Div, +Slope, Auto, Ac, and Ext.

Voltages shown near the waveforms are display center dc levels.

1

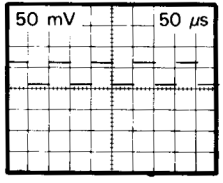

0 V

2

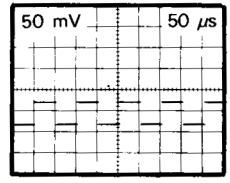

0 V

3

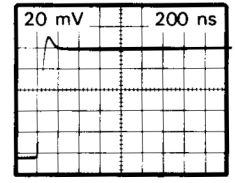

7.7 V

4

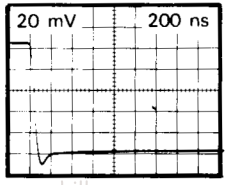

7.6 V

http://manoman.sqhill.com

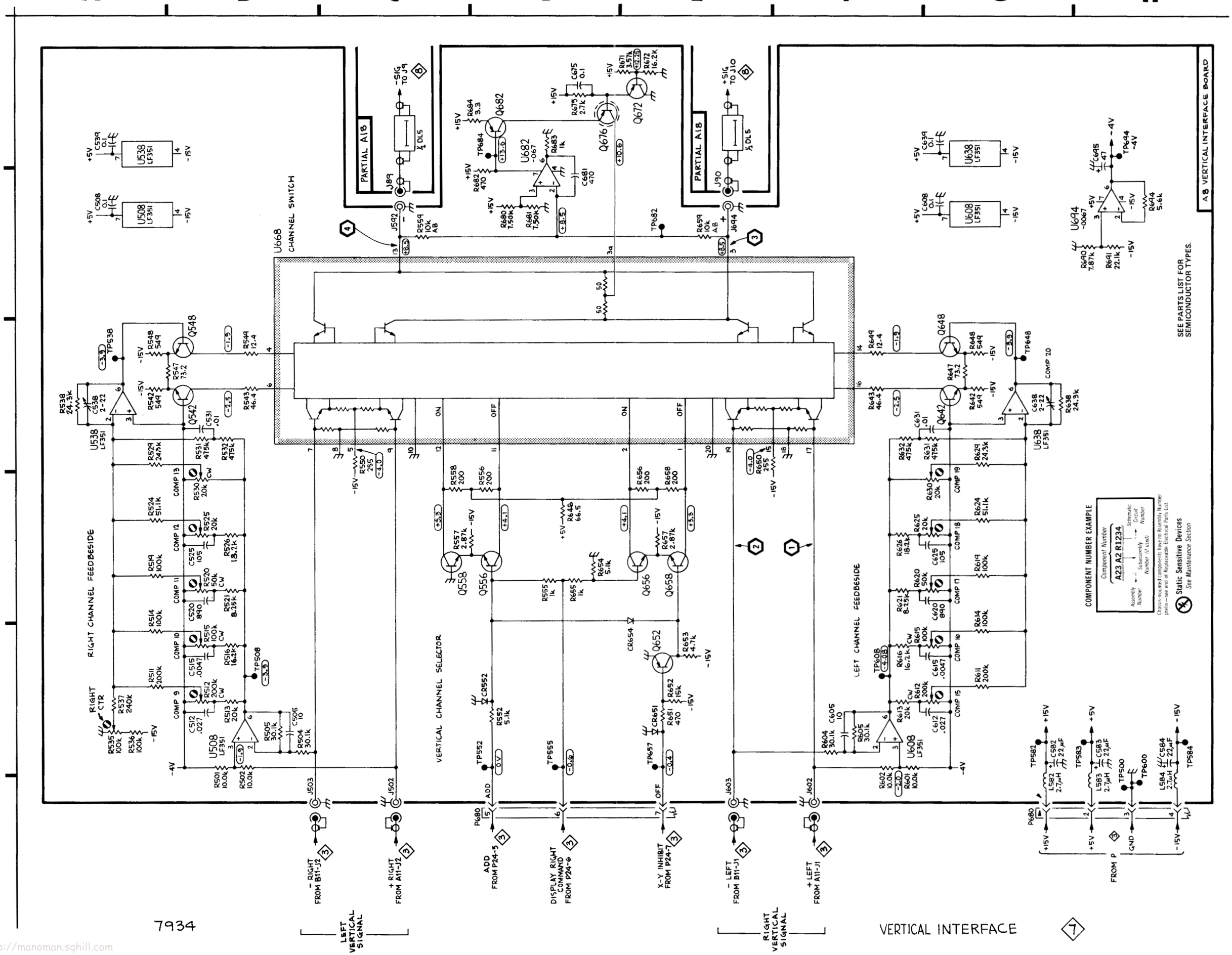

http://manoman.sqhill.com

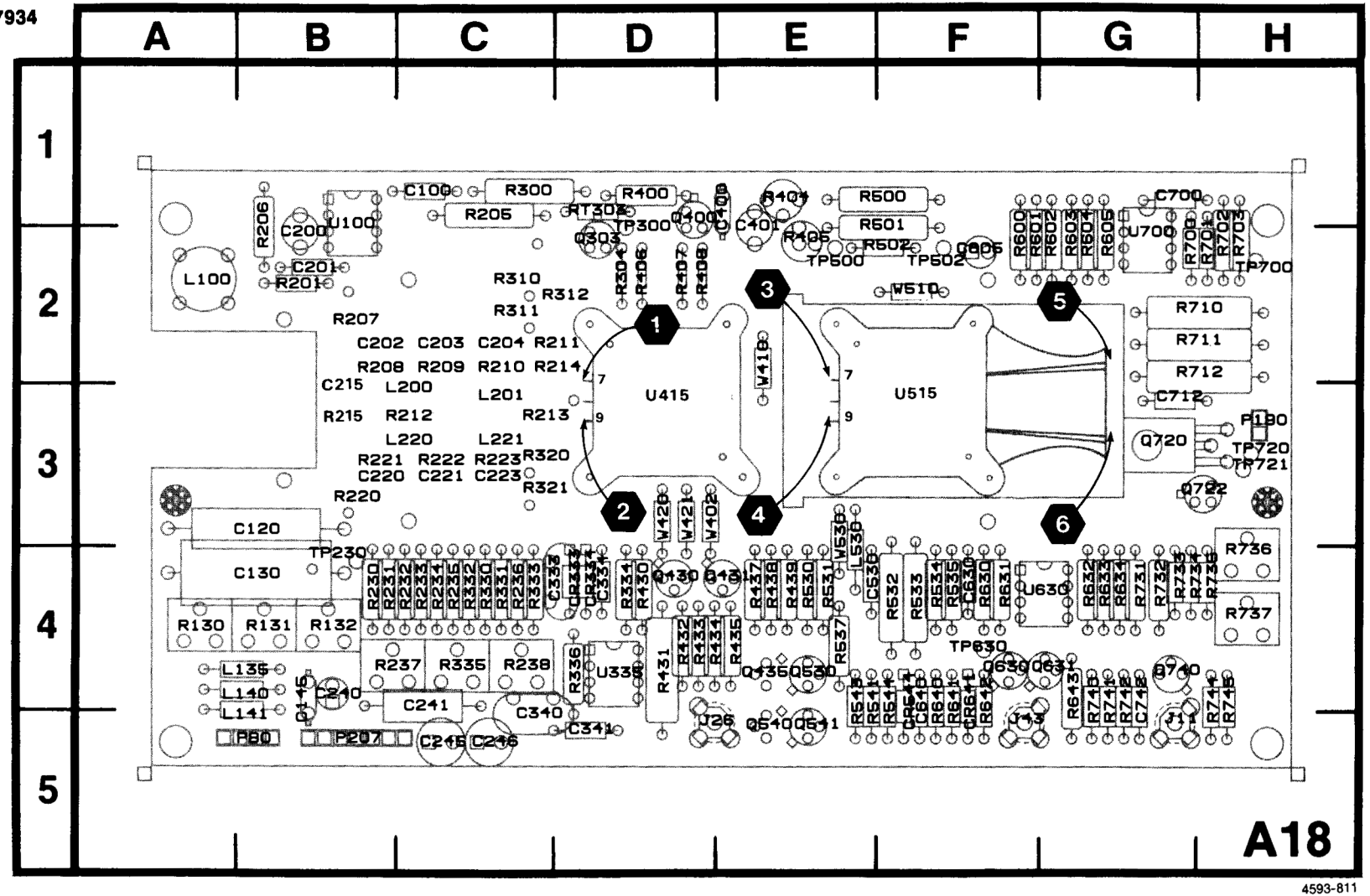

Figure 8-10. A19-Vertical Amplifier Circuit Board Assembly.

http://manoman.sqhill.com

ASSEMBLY A19 — Vertical Amplifer Circuit Board

CIRCUIT NUMBER	SCHEM LOCATION	BOARD LOCATION	CIRCUIT NUMBER	SCHEM LOCATION	BOARD LOCATION	CIRCUIT NUMBER	SCHEM LOCATION	BOARD LOCATION
C100	D4	C1	Q740	A4	G4	R533	G2	F4
C120	D2	B3				R534	B3	F4
C130	C2	B4	R130	C2	A4	R535	B3	F4
C145	G4	B4	R131	C2	B4	R537	B3	E4
C200	E2	B2	R132	D2	B4	R541	A4	E4
C201	D2	B2	R201	D2	B2	R543	A4	E4
C202	B1	B2	R205	E2	C1	R544	A4	F4
C203	B1	C2	R206	E1	B1	R600	G2	F2
C204	B1	C2	R207	B1	B2	R601	G2	F2
C215	B2	B2	R208	B1	B2	R602	G2	G2
C220	B2	B3	R209	B1	C2	R603	F2	G2
C221	B2	C3	R210	B1	C2	R604	F2	G2
C223	B2	C3	R211	C2	D2	R605	G2	G2
C240	G4	B4	R212	B2	C3	R630	B4	F4
C241	D2	C4	R213	B2	C3	R631	B4	F4
C245	G4	C5	R214	C2	D2	R632	B3	G4
C246	G5	C5	R215	B2	B3	R633	B3	G4
C333	D2	C4	R220	B2	B3	R634	A3	G4
C334	C2	D4	R221	B3	B3	R640	B4	F4
C340	D2	C5	R222	B3	C3	R641	B3	F4
C341	D4	D5	R223	B3	C3	R642	B3	F4
C400	E2	E1	R230	C2	B4	R643	B4	G4
C401	E2	E1	R231	D2	B4	R700	F3	G2
C530	H2	E4	R232	D2	C4	R701	F3	H2
C605	F3	F2	R233	D2	C4	R702	E3	H2
C630	B3	F4	R234	C2	C4	R703	E3	H2
C640	B4	F4	R235	D2	C4	R710	G2	H2
C700	D4	G1	R236	D2	C4	R711	G3	H2
C712	G4	G3	R237	D2	B4	R712	G4	H2
C742	A4	G5	R238	C4	C4	R731	G3	G4
			R300	E2	C1	R732	G3	G4
CR333	C2	D4	R301	E3	D2	R733	H3	G4
CR334	C2	D4	R304	E2	D2	R734	G3	G4
CR544	B3	F4	R310	C4	C2	R735	H3	H4
CR641	B3	F4	R311	C2	C2	R736	B4	H4
			R312	E2	D2	R737	A3	H4
J11	A3	G5	R320	C3	C3	R740	B4	G4
J26	A4	E5	R321	C2	C3	R741	A4	G4
J43	A4	F5	R330	D2	C4	R742	A3	G4
			R331	D2	C4	R744	B3	H4
L100	B2	A2	R332	D2	C4	R745	B3	H4
L135	G5	B4	R333	D2	C4			
L140	G4	B4	R334	C2	D4	RT303	E2	D1
L141	G4	B5	R335	D2	C4			
L200	B1	C3	R336	C2	D4	TP230	C2	B4
L201	B1	C3	R400	E2	D1	TP300	E2	D1
L220	B2	C3	R404	E2	E1	TP500	G2	E2
L221	B2	C3	R405	E2	E2	TP502	G2	F2
L530	H2	E3	R406	E3	D2	TP630	B4	F2
			R407	E1	D2	TP700	F3	F4
P190	H3	H3	R408	E2	D2	TP720	H3	H3
P207	A3	B5	R430	C3	D4	TP721	H3	H3
P207	F4	B5	R431	C4	D4			
			R432	B3	D4	U100	D2	B1
Q303	E2	D2	R433	B3	D4	U335	C2	D4
Q400	E2	D1	R434	B4	D4	U415	E1	D3
Q430	C3	D4	R435	B4	E4	U515	G1	F3
Q431	C4	E4	R437	C4	E4	U630	B3	G4
Q435	B3	E4	R438	F2	E4	U700	F3	G2
Q530	B4	E4	R439	F2	E4			
Q540	A4	E5	R500	E1	F1	W402	F3	D3
Q541	B4	E5	R501	E2	F1	W410	G2	E2
Q630	B3	F4	R502	G2	F2	W420	F2	D3
Q631	B4	G4	R530	F2	E4	W421	F2	D3
Q720	H3	G3	R531	G2	E4	W510	G2	F2
Q722	G3	H3	R532	B3	F4	W530	G2	E3

CHASSIS MOUNTED PARTS (not pictured)

CIRCUIT NUMBER	SCHEM LOCATION	BOARD LOCATION	CIRCUIT NUMBER	SCHEM LOCATION	BOARD LOCATION	CIRCUIT NUMBER	SCHEM LOCATION	BOARD LOCATION
A31	H1	Chassis	J9	B2	Chassis	L81	H1	Chassis
A31	H3	Chassis	J10	B1	Chassis	L82	H2	Chassis
			J10	B2	Chassis			
C81	H2	Chassis	J89	A2	Chassis	R81	H1	Chassis
			J90	A2	Chassis	R82	H2	Chassis
DL5	A2	Chassis				R83	H2	Chassis

http://manoman.sqhill.com

VOLTAGE AND WAVEFORM CONDITIONS

The voltages and waveforms shown were obtained with the 7934 front panel variable controls at midrange except B INTENSITY control is set at minimum; VERTICAL MODE, LEFT; TRIGGER SOURCE, VERT MODE; HORIZONTAL MODE, B; CALIBRATOR, 4 V; READOUT INTENSITY, OFF.

Voltage Conditions. The voltages shown on the diagram were obtained using a digital multimeter with a 10 MΩ input impedance (TEKTRONIX DM 501A Digital Multimeter or TEKTRONIX 7D13A Digital Multimeter used with a readout-equipped 7000-series oscilloscope). Voltages are taken with no signal input and with the vertical trace centered.

Waveform Conditions. The waveforms shown below were obtained using a test oscilloscope system with 10 MΩ input impedance and at least 60 MHz bandwidth. (TEKTRONIX 7603 Oscilloscope, 7B53A Time Base, and 7A13 Differential Comparator equipped with a 10X probe.) A 7A-series vertical amplifier plug-in was installed in the 7904A LEFT VERT compartment and a 7B-series time base plug-in in the 7904A B HORIZ compartment. The vertical amplifier was set for a centered, 6 to 8 division display on the 7904A with the CALIBRATOR output fed to the vertical amplifier input. The 7904A oscilloscope time base was externally triggered with the CALIBRATOR signal.

Voltages shown near the waveform are display center dc levels.

1

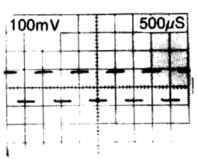

7.7 V

2

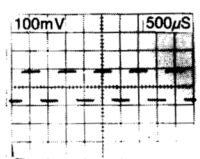

7.7 V

3

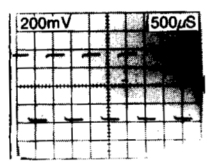

11.9 V

4

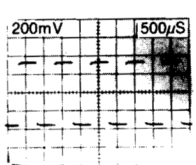

11.9 V

5

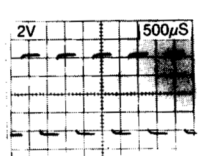

34.5 V

6

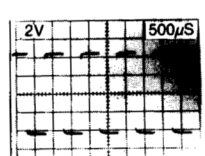

34.5 V

http://manoman.sqhill.com

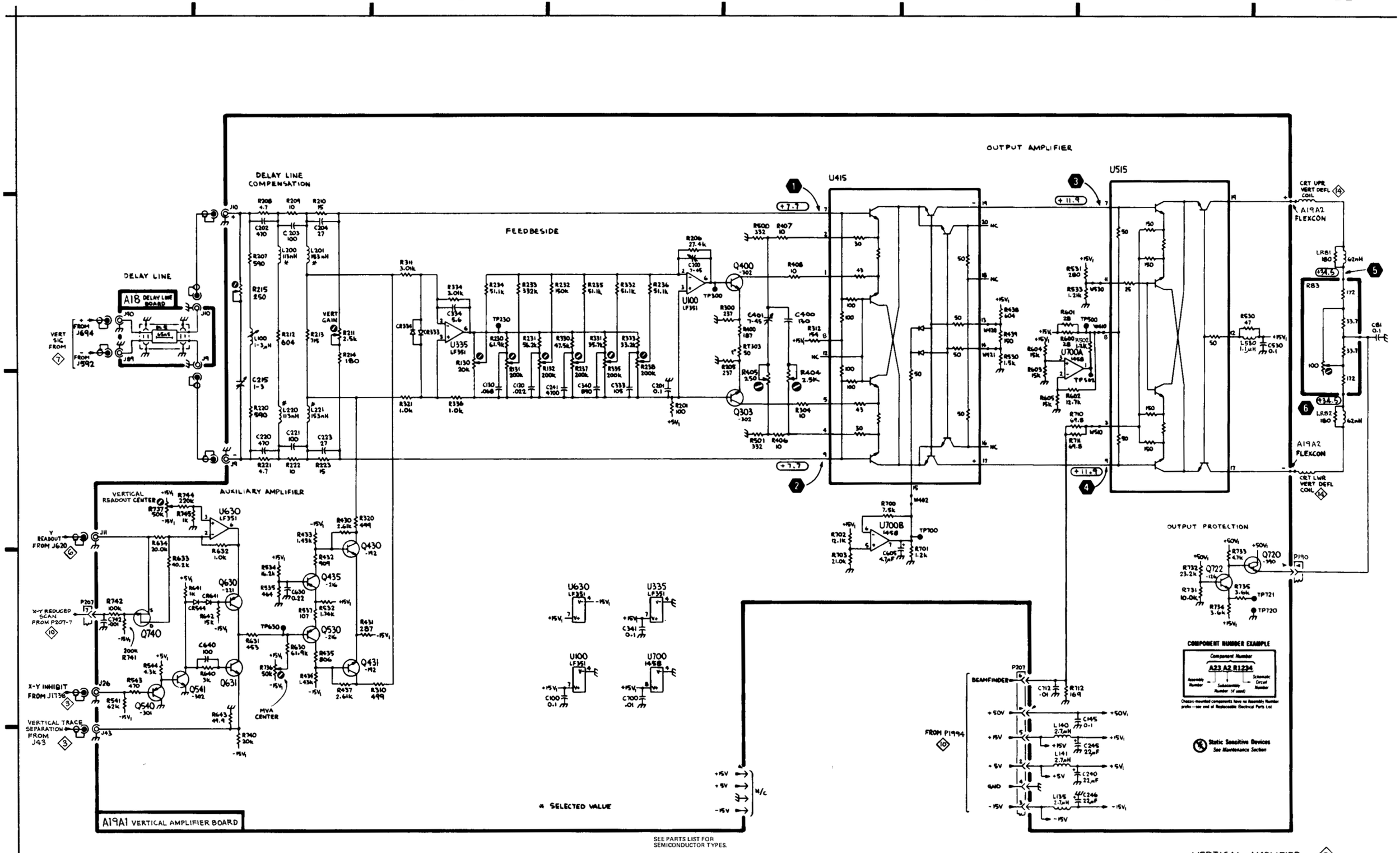

7934

http://manoman.sqhill.com

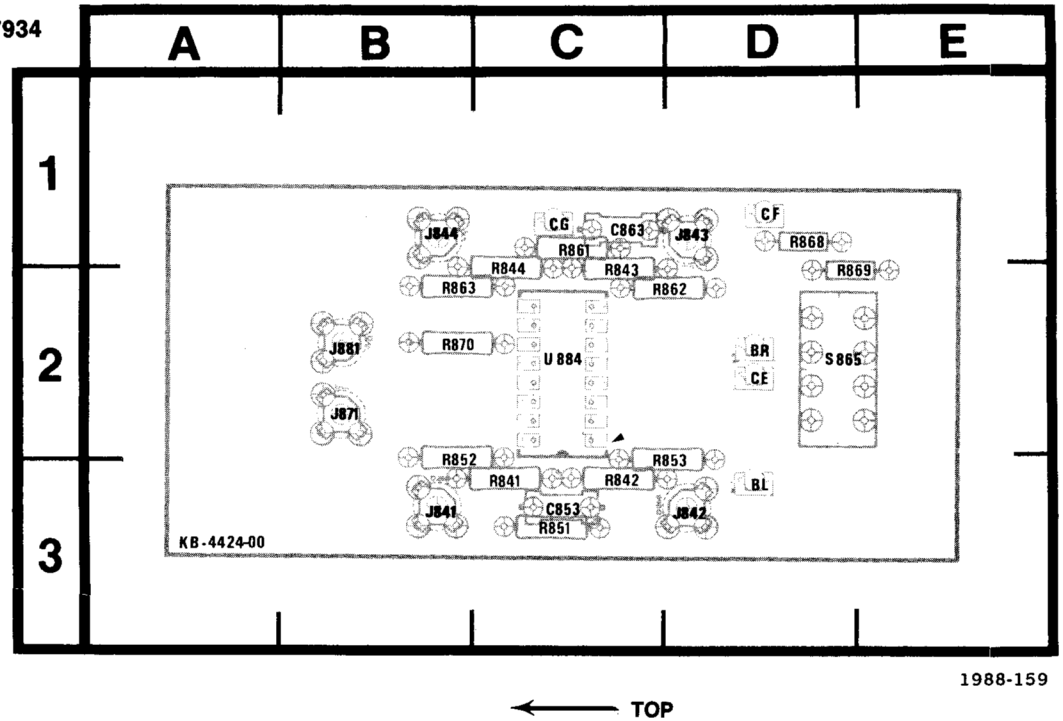

1988-159

TOP

Figure 8-13. A11-Horizontal Interface Circuit Board Assembly.

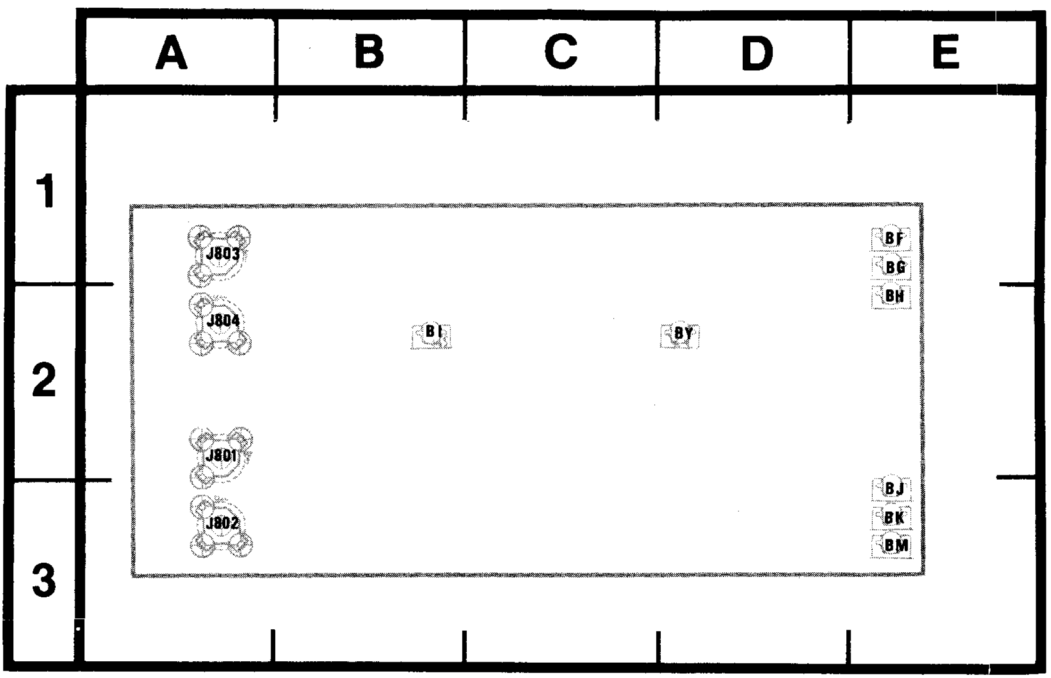

1988-160

TOP

Figure 8-12. A10-Horizontal Interconnect Circuit Board Assembly.

http://manoman.sqhill.com

HORIZONTAL INTERFACE DIAGRAM 9

ASSEMBLY A9 — X-Y Compensation Circuit Board (Option 3 Only)

CIRCUIT NUMBER	SCHEM LOCATION	BOARD LOCATION	CIRCUIT NUMBER	SCHEM LOCATION	BOARD LOCATION	CIRCUIT NUMBER	SCHEM LOCATION	BOARD LOCATION
C822	C5	C2	J813	D5	A1	L827	E6	B2
C825	C5	B1	J814	D6	A2	L832	B5	D1
C827	C6	B2				L835	C5	B2
C832	C5	C2	K822	B5	D2	L837	C5	B1
C835	C5	B2	K838	D5	B2			
C837	C5	B1				R822	B6	D2
			L805	C5	B2	R832	B5	D2
J811	D4	A2	L822	B6	D2			
J812	D5	A3						

ASSEMBLY A10 — Horizontal Interconnect Circuit Board

CIRCUIT NUMBER	SCHEM LOCATION	BOARD LOCATION	CIRCUIT NUMBER	SCHEM LOCATION	BOARD LOCATION	CIRCUIT NUMBER	SCHEM LOCATION	BOARD LOCATION
J801	D1	A2						
J802	D2	A3						
J803	D2	A1						
J804	D3	A2						

ASSEMBLY A11 — Horizontal Interface Circuit Board

CIRCUIT NUMBER	SCHEM LOCATION	BOARD LOCATION	CIRCUIT NUMBER	SCHEM LOCATION	BOARD LOCATION	CIRCUIT NUMBER	SCHEM LOCATION	BOARD LOCATION
C853	E1	C3	J881	G3	B2	R862	E2	C2
C863	E2	C1	R841	E1	C3	R863	E2	B2
			R842	E1	C3	R868	E3	D1
CR820	B5	D2	R843	E2	C1	R869	E3	D2
			R844	E2	C1	R870	G4	B2
J841	E1	B3	R851	E1	C3			
J842	E2	D3	R852	E1	B2	S865	E3	D2
J843	E2	D1	R853	E1	C2			
J844	E3	B1	R861	E2	C1	U884	G3	C2
J871	G1	B2						

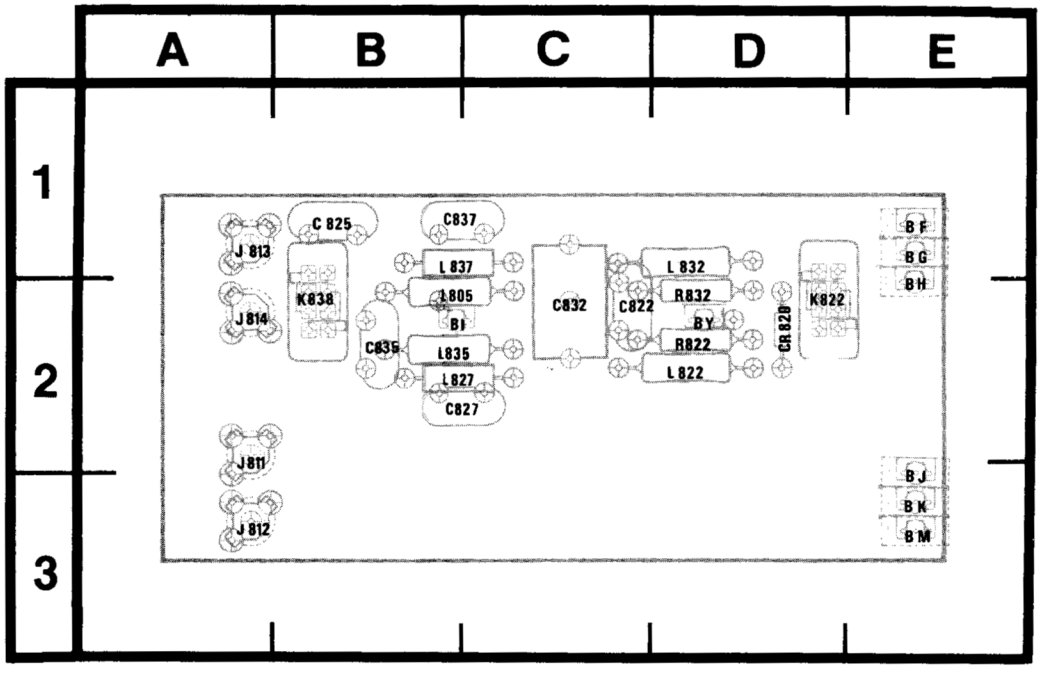

Figure 8-11. A9-X-Y Compensation Circuit Board Assembly.

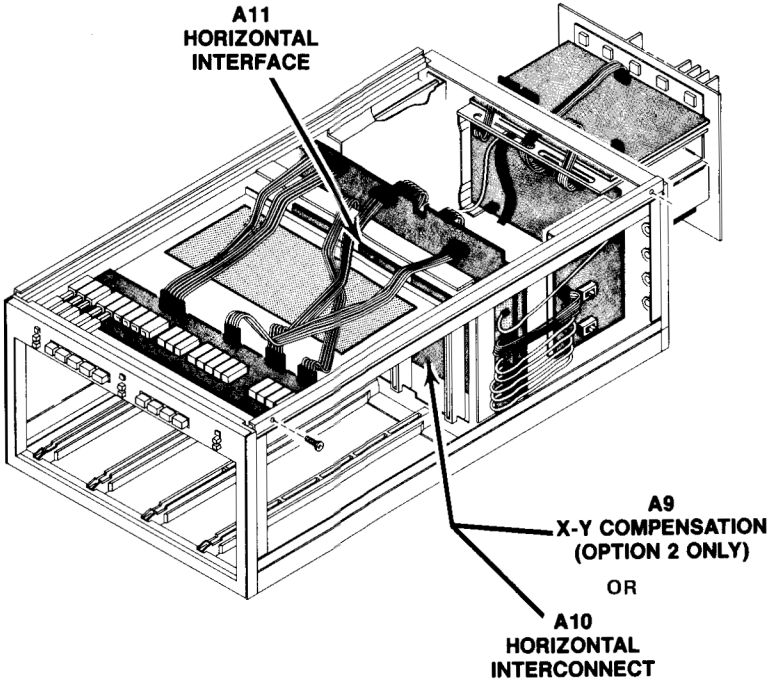

http://manoman.sqhill.com

VOLTAGE CONDITIONS

The voltages shown were obtained with the 7934 controls set as follows:

Front panel controls (knob type) at midrange; VERTICAL MODE, LEFT; TRIGGER SOURCE, VERT MODE; NON STORE button, in HORIZONTAL MODE A. No plug-in units are installed.

Voltage Conditions. The voltages shown on the diagram were obtained using a digital multimeter with a 10 MΩ input impedance (Tektronix DM501 Digital Multimeter or Tektronix 7D13 Digital Multimeter used with readout equipped, 7000-series oscilloscope).

http://manoman.sqhill.com

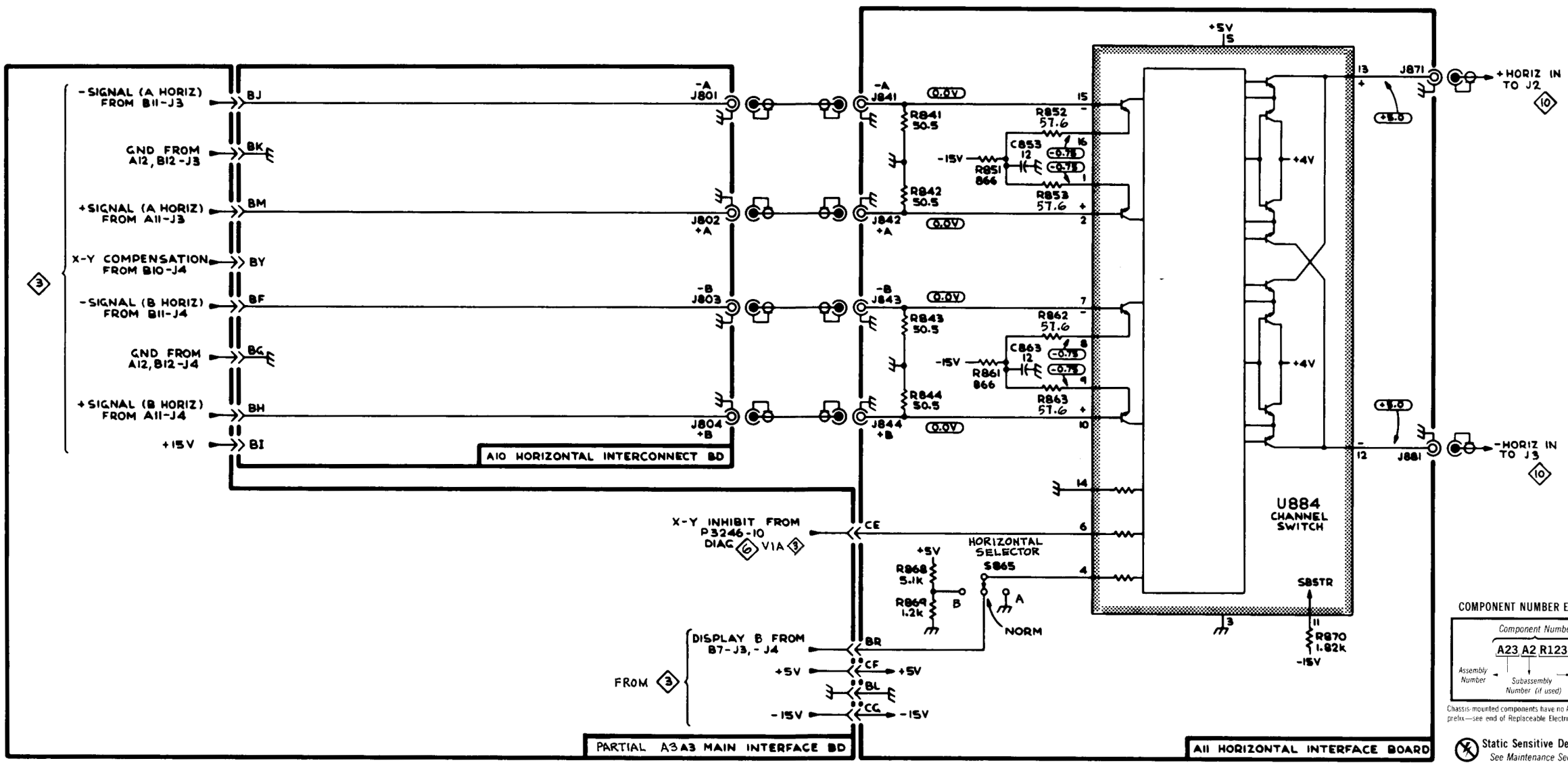

COMPONENT NUMBER EXAMPLE

Component Number: A23 A2 R1234
Assembly Number — Subassembly Number (if used) — Schematic Circuit Number

Chassis-mounted components have no Assembly Number prefix—see end of Replaceable Electrical Parts List.

Static Sensitive Devices
See Maintenance Section

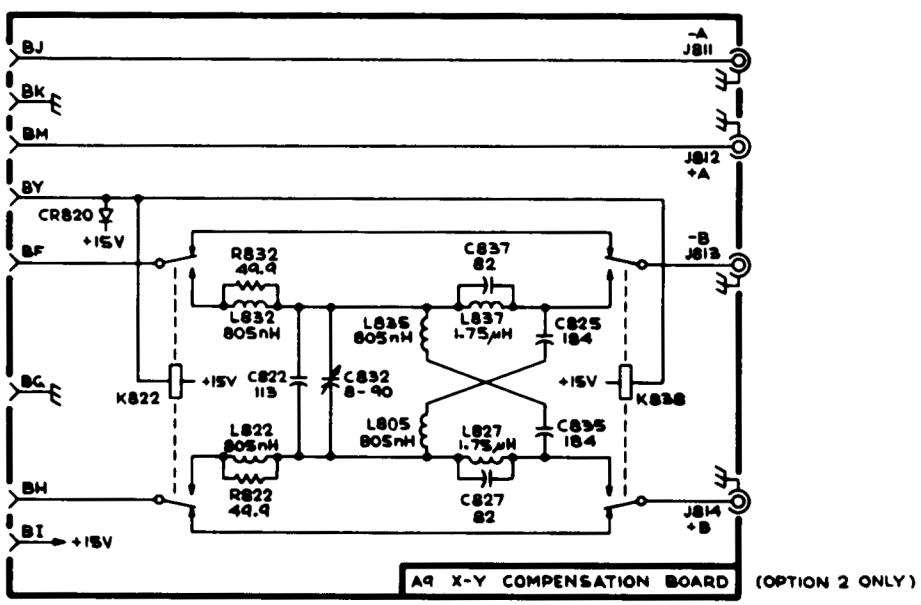

(OPTION 2 ONLY)

SEE PARTS LIST FOR SEMICONDUCTOR TYPES.

7934

HORIZONTAL INTERFACE 9

http://manoman.sqhill.com

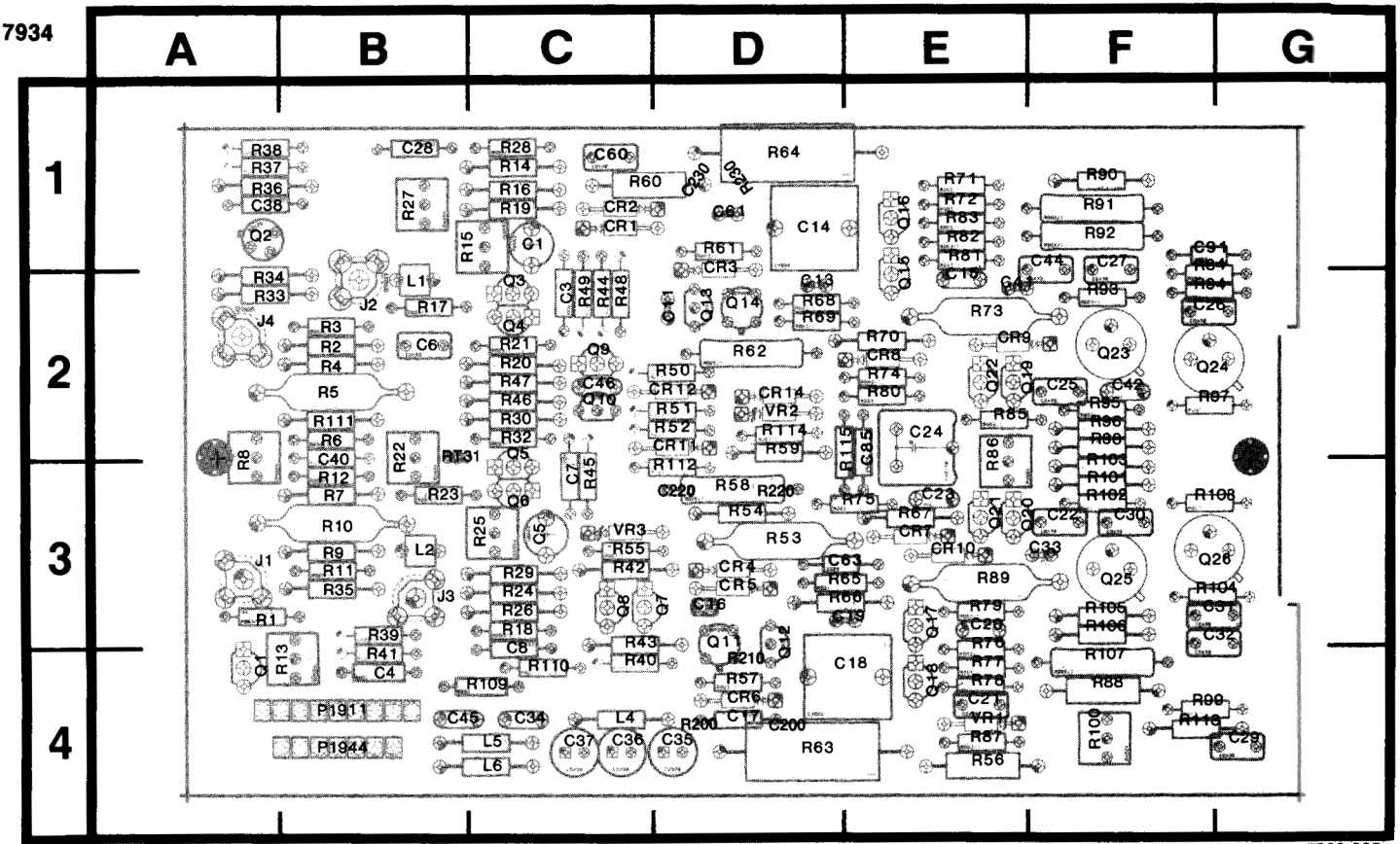
A
B
C
D
E
F
G
1
2
3
4
R38
R37
R36
C38
C28
R28
R14
R16
R19
C60
R60
CR2
CR1
R64
C14
R71
R72
R83
R82
R81
C19
R90
R91
R92
C94
R84
R84
C26
Q2
R27
R15
G1
Q3
R34
R33
L1
J2
R17
C3
R49
R44
R48
Q13
Q14
R68
R69
C44
C27
R98
R73
J4
R3
R2
R4
C6
Q4
R21
R20
R47
R46
R30
R32
Q9
R62
R70
CR8
R74
R80
CR9
Q23
Q24
R5
R50
CR12
R51
R52
CR11
R112
C46
Q10
CR14
VR2
R114
R59
R115
C85
C24
Q22
Q19
C25
C42
R95
R96
R98
R85
R87
R111
R6
C40
R12
R7
R8
R22
RT31
Q5
C7
R45
R58
R220
C220
R23
Q6
R75
C23
R67
CR7
R86
R103
R104
R102
R108
R10
R25
Q5
VR3
R55
R42
R54
R53
CR4
CR5
C63
R65
R66
C19
C16
Q21
Q20
C22
C30
CR10
C33
Q26
J1
R9
R11
R35
L2
J3
R29
R24
R26
R18
C8
R110
R43
R40
Q8
Q7
R89
R79
C29
R76
R77
R78
C21
VR1
R87
R56
Q25
R105
R106
R107
R88
R104
C31
C32
R1
R39
R41
C4
R13
Q1
R109
Q11
R210
Q12
R57
CR6
C17
C200
C18
Q17
Q18
R100
R99
R118
C29
P1911
P1944
C45
C34
L4
R200
C37
C36
C35
L5
L6
R63
R56
P630
C230
C61
Q16
Q15
C13
Q18
Q19
C42
C43
C85
C115
C86
C85
C220
C230
C200
C210
C65
C66
C67
C68
C69
C70
C71
C72
C73
C74
C75
C76
C77
C78
C79
C80
C81
C82
C83
C84
C85
C86
C87
C88
C89
C90
C91
C92
C93
C94
C95
C96
C97
C98
C99
C100
C101
C102
C103
C104

ASSEMBLY A20 — Horizontal Amplifier Circuit Board

CIRCUIT NUMBER	SCHEM LOCATION	BOARD LOCATION
C1	B3	C1
C3	C2	C2
C4	B2	B4
C5	B4	C3
C6	C3	B2
C7	C4	C3
C8	B4	C4
C13	B4	D2
C14	D3	D1
C15	E2	E2
C17	D4	D4
C18	D4	D4
C19	D4	D3
C20	E4	E3
C21	E4	E4
C22	E4	F3
C23	E3	E3
C24	E3	E2
C25	F3	F2
C26	F2	F2
C27	G2	F1
C28	B3	B1
C29	G4	G4
C30	F4	F3
C31	F4	F4
C32	G5	F4
C33	E4	F3
C34	B1	C4
C35	B1	D4
C36	B1	C4
C37	B1	C4
C38	B5	A1
C40	B3	B2
C41	E2	E2
C42	F4	F2
C44	B1	F1
C45	B1	B4
C46	C3	C2
C60	B1	C1
C61	D3	D1
C62	B1	on back
C63	D4	D3
C85	E3	E2
C91	B1	F1
C200	D4	D4
C220	D4	D3
C230	D3	D1
CR1	D3	C2
CR2	D3	C2
CR3	D3	D1
CR4	D4	D3
CR5	D4	D3
CR6	D4	D4
CR7	E4	E3
CR8	E3	E2
CR9	E3	E2
CR10	E4	E3
CR11	C4	D2
CR12	C3	D2
CR13	C2	
CR14	C2	D2
J1	A5	A3
J2	A2	B2
J3	A4	B3
J4	A5	A2
L1	B3	B2
L2	B4	B3
L3	G3	
L4	A1	C4
L5	A1	C4
L6	A1	C4
P1911	A1	B4
P1911	A5	B4
P1994	A2	B4

CIRCUIT NUMBER	SCHEM LOCATION	BOARD LOCATION
P1994	A5	B4
Q1	B5	A4
Q2	B5	A1
Q3	C2	C2
Q4	C3	C2
Q5	C4	C3
Q6	C4	C3
Q7	C2	C3
Q8	B2	C3
Q9	C2	C2
Q10	C4	C2
Q11	D4	D3
Q12	D4	D3
Q13	D2	D2
Q14	D2	D2
Q15	E3	E2
Q16	E3	E1
Q17	E4	E3
Q18	E4	E4
Q19	F3	E2
Q20	E4	E3
Q21	E4	E3
Q22	E3	E2
Q23	F2	F2
Q24	F3	F2
Q25	F5	F3
Q26	F4	F3
R1	B5	A3
R2	B2	B2
R3	B3	B2
R4	A3	B2
R5	A3	B2
R6	A3	B2
R7	B4	B3
R8	B3	A2
R9	A4	B3
R10	A4	B3
R11	B4	B3
R12	B3	B3
R13	B3	B4
R14	B3	C1
R15	B3	C1
R16	B3	C1
R17	B2	B2
R18	B4	C3
R19	C3	C1
R20	B3	C2
R21	C3	C2
R22	C3	B2
R23	B4	B3
R24	B4	C3
R25	B4	C3
R26	B4	C3
R27	B3	B2
R28	B3	C1
R29	C4	C3
R30	B4	C2
R32	C3	C2
R33	B5	A2
R34	B5	A2
R35	B5	B3
R36	B5	A1
R37	B5	A1
R38	B5	A1
R39	B3	B3
R40	B2	C4
R41	B2	B4
R42	C2	C3
R43	B2	C3
R44	C3	C2
R45	C4	C3
R46	C3	C2
R47	C3	C2
R48	C3	C2
R49	C2	C2
R50	C2	D2

CIRCUIT NUMBER	SCHEM LOCATION	BOARD LOCATION
R51	C3	D2
R52	C3	D2
R53	D4	D3
R54	D4	D3
R55	D4	C3
R56	D4	E4
R57	D4	D4
R58	D4	D3
R59	D3	D2
R60	D3	C1
R61	D2	D1
R62	D3	D2
R63	D4	D4
R64	D3	D1
R65	D4	D3
R66	D4	D3
R67	E5	E3
R68	D3	D2
R69	D3	D2
R70	E2	E2
R71	E2	E1
R72	E2	E1
R73	E2	E2
R74	E3	E2
R75	E4	E3
R76	E4	E4
R77	E4	E4
R78	E4	E4
R79	E4	E3
R80	E3	E2
R81	F3	E1
R82	F3	E1
R83	F2	E1
R84	F3	F2
R85	E3	E3
R86	E3	E2
R87	E4	E4
R88	F3	F4
R89	E4	E3
R90	G2	F1
R91	G2	F1
R92	F2	F1
R93	F2	F2
R94	F3	F2
R95	F4	F2
R96	F4	F2
R97	G3	F2
R98	F4	F2
R99	G3	F4
R100	G3	F4
R101	F4	F3
R102	F4	F3
R103	F4	F3
R104	F4	F3
R105	F5	F3
R106	G4	F3
R107	G5	F4
R108	G4	F3
R109	A1	C4
R110	A1	C4
R111	B3	B2
R112	C4	D3
R113	G3	F4
R114	D3	D2
R115	E3	D2
R200	D4	D4
R210	D4	D3
R220	D4	D3
R230	D3	D1
RT31	B4	B2
VR1	E4	E4
VR2	D3	D2
VR3	D4	C3

http://manoman.sqhill.com

VOLTAGE AND WAVEFORM CONDITIONS

The voltages and waveforms shown were obtained with the 7934 controls set as follows:

Front panel controls (knob type) at midrange; VERTICAL MODE, LEFT; TRIGGER SOURCE, VERT MODE; NON STORE button, in.

Voltage Conditions. The voltages shown on the diagram were obtained using a digital multimeter with a 10 MΩ input impedance (Tektronix DM501 Digital Multimeter or Tektronix 7D13 Digital Multimeter used with readout equipped, 7000-series oscilloscope).

Waveform Conditions. The waveforms shown below were obtained using a test oscilloscope system with 10 MΩ input impedance and at least 60 MHz bandwidth (Tektronix 7603 Oscilloscope, 7B53A Time Base, and 7A13 Differential Comparator equipped with a 10X probe). A 7B53A Time Base plug-in unit is installed in the mainframe A HORIZ compartment. The 7B53A is set for internal auto-trigger and 1 microsecond/division sweep rate.

1

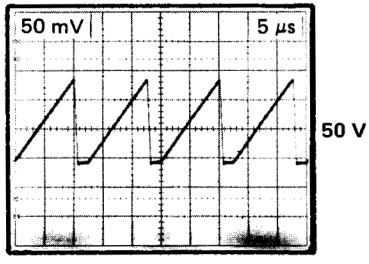

2

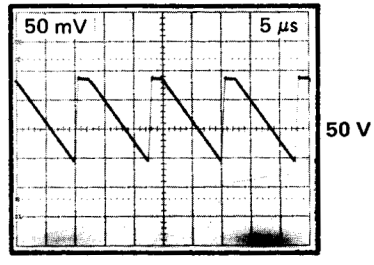

3

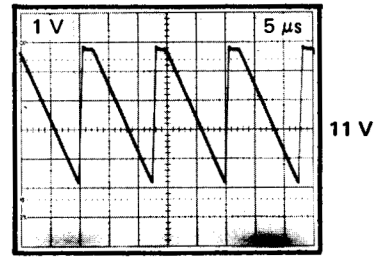

4

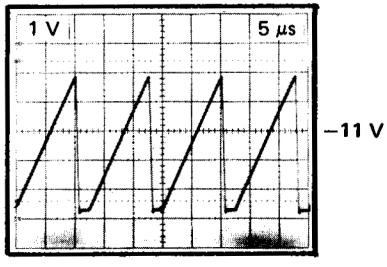

5

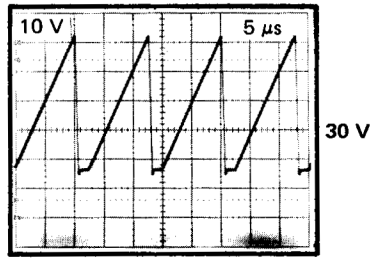

6

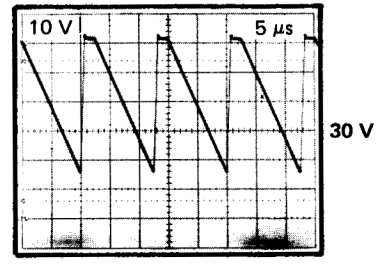

http://manoman.sqhill.com

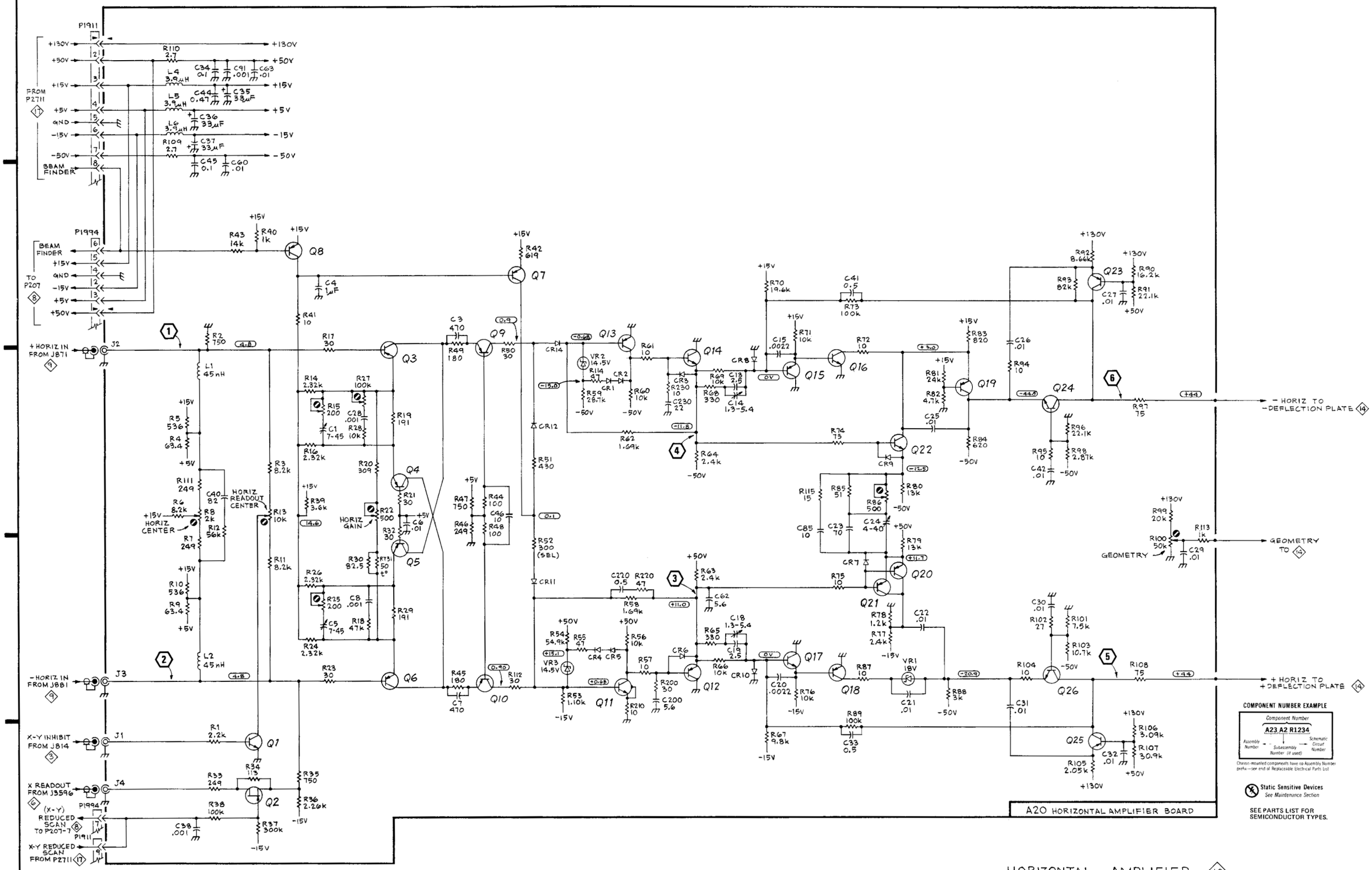

http://manoman.sqhill.com

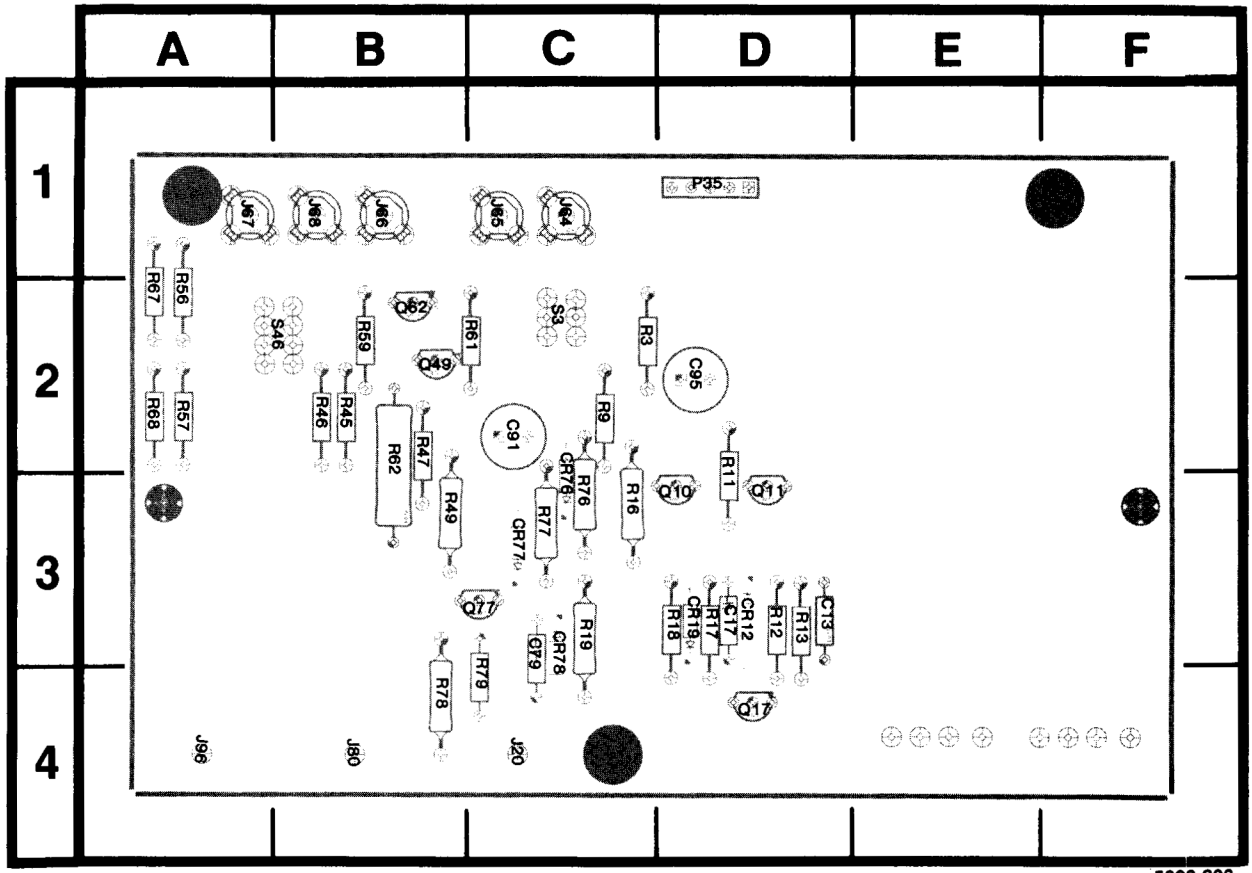

FRONT

Figure 8-15. A12-Signal Output Circuit Board Assembly.

http://manoman.sqhill.com

ASSEMBLY A12 — Signal Output Circuit Board

CIRCUIT NUMBER	SCHEM LOCATION	BOARD LOCATION	CIRCUIT NUMBER	SCHEM LOCATION	BOARD LOCATION	CIRCUIT NUMBER	SCHEM LOCATION	BOARD LOCATION
C13	D1	D3	P35	F4	D1	R45	B3	B2
C17	E2	D3				R46	B3	B3
C79	F3	C3	Q10	D2	D3	R47	C3	B2
C91	F4	C2	Q11	D2	D3	R49	D3	B3
C95	F4	D2	Q17	E2	D4	R56	B4	A2
			Q49	D3	B2	R57	B4	A2
CR12	D2	D3	Q62	C4	B2	R59	C4	B2
CR19	E2	D3	Q77	E3	C3	R61	C3	C2
CR76	E3	C2				R62	C4	B2
CR77	E3	C3	R3	B2	C2	R67	B4	A2
CR78	E3	C3	R9	C2	C2	R68	B4	A2
			R11	D2	D2	R76	D3	C3
J64	B1	C1	R12	D1	D3	R77	E3	C3
J65	B2	C1	R13	D1	D3	R78	E3	B4
J66	B3	B1	R16	D1	C3	R79	F3	C4
J67	B4	A1	R17	E2	D3			
J68	B4	B1	R18	E2	D3	S3	C1	C2
			R19	F2	C3	S46	C3	B2

CHASSIS MOUNTED PARTS (not pictured)

CIRCUIT NUMBER	SCHEM LOCATION	BOARD LOCATION	CIRCUIT NUMBER	SCHEM LOCATION	BOARD LOCATION	CIRCUIT NUMBER	SCHEM LOCATION	BOARD LOCATION
J20	F2	Chassis	J80	F3	Chassis			
J30	G1	Chassis	J96	E5	Chassis			
J33	G2	Chassis						

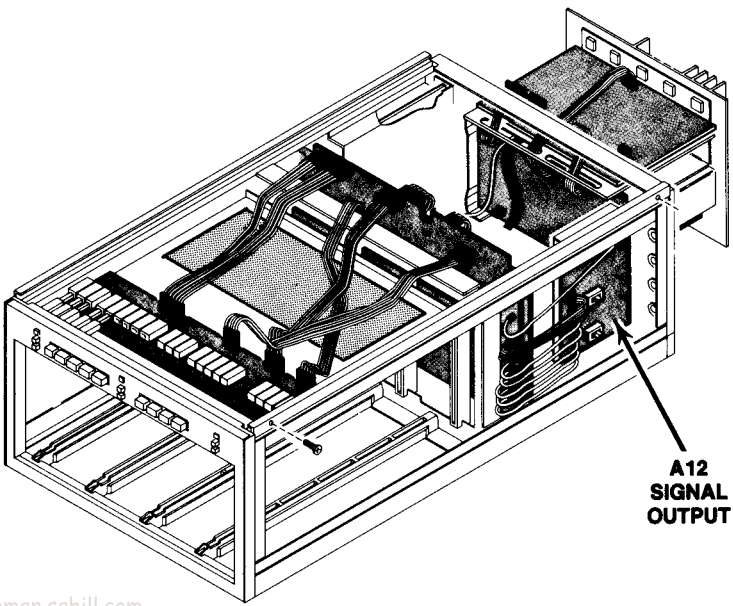

http://manoman.sqhill.com

VOLTAGE AND WAVEFORM CONDITIONS

The voltages and waveforms shown were obtained with the 7934 controls set as follows:

Front panel controls (knob type) at midrange; VERTICAL MODE, LEFT; TRIGGER SOURCE, VERT MODE; NON STORE button, in.

Voltage Conditions. The voltages shown on the diagram were obtained using a digital multimeter with a 10 MΩ input impedance (Tektronix DM501 Digital Multimeter or Tektronix 7D13 Digital Multimeter used with readout equipped, 7000-series oscilloscope).

Waveform Conditions. The waveforms shown below were obtained using a test oscilloscope system with 10 MΩ input impedance and at least 60 MHz bandwidth (Tektronix 7603 Oscilloscope, 7B53A Time Base, and 7A13 Differential Comparator equipped with a 10X probe). A 7B53A Time Base plug-in unit is installed in the mainframe A HORIZ compartment. The 7B53A is set for internal auto-trigger and 0.5 millisecond/division sweep rate.

1

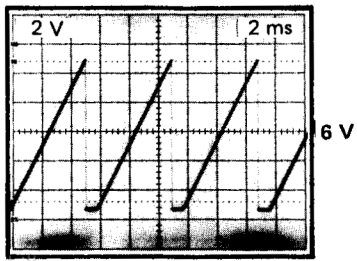

2

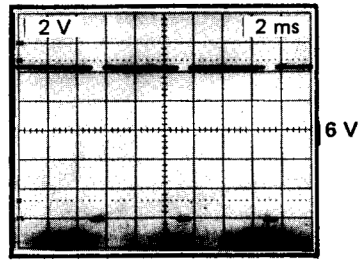

http://manoman.sqhill.com

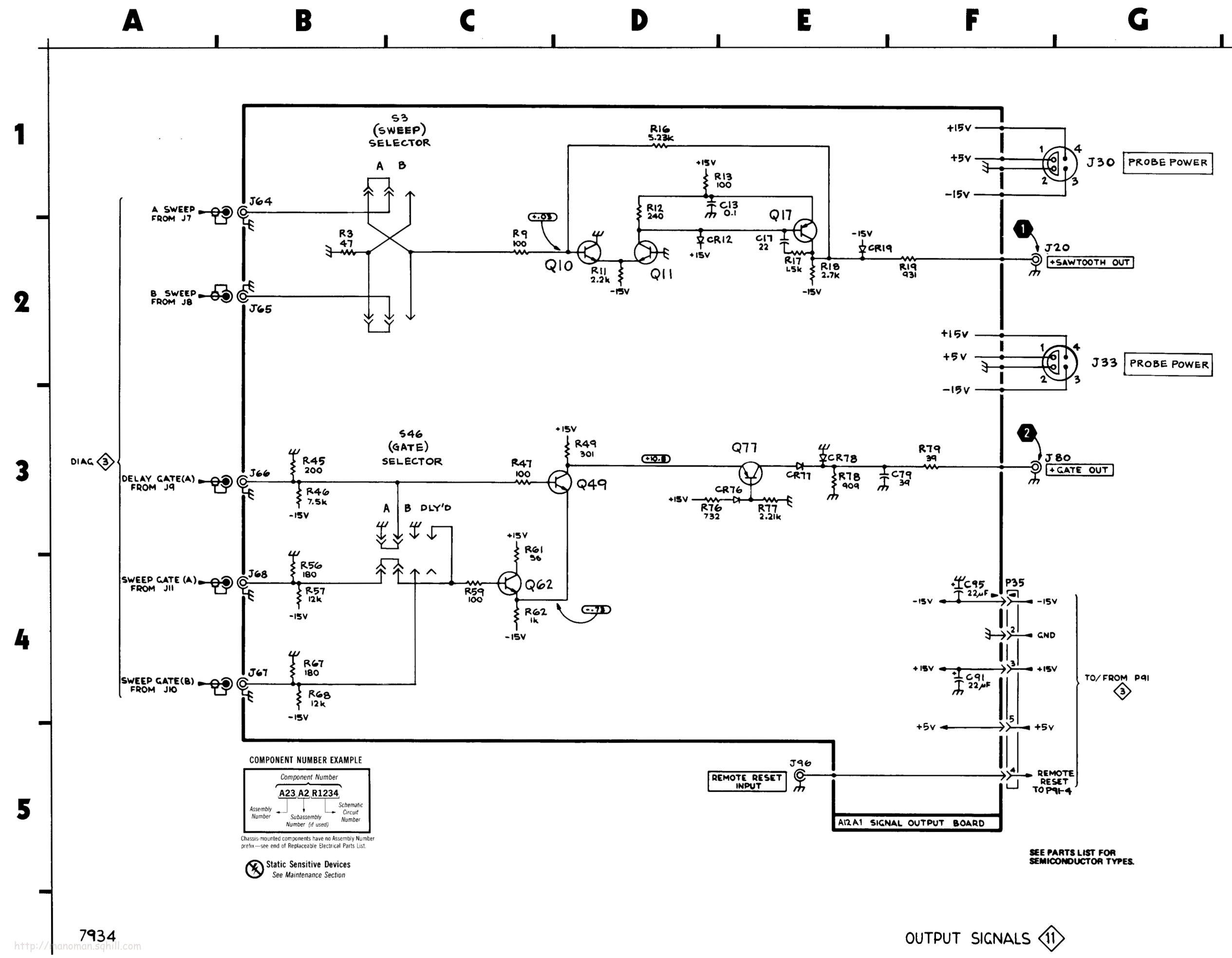

http://manoman.sqhill.com

OUTPUT SIGNALS 11

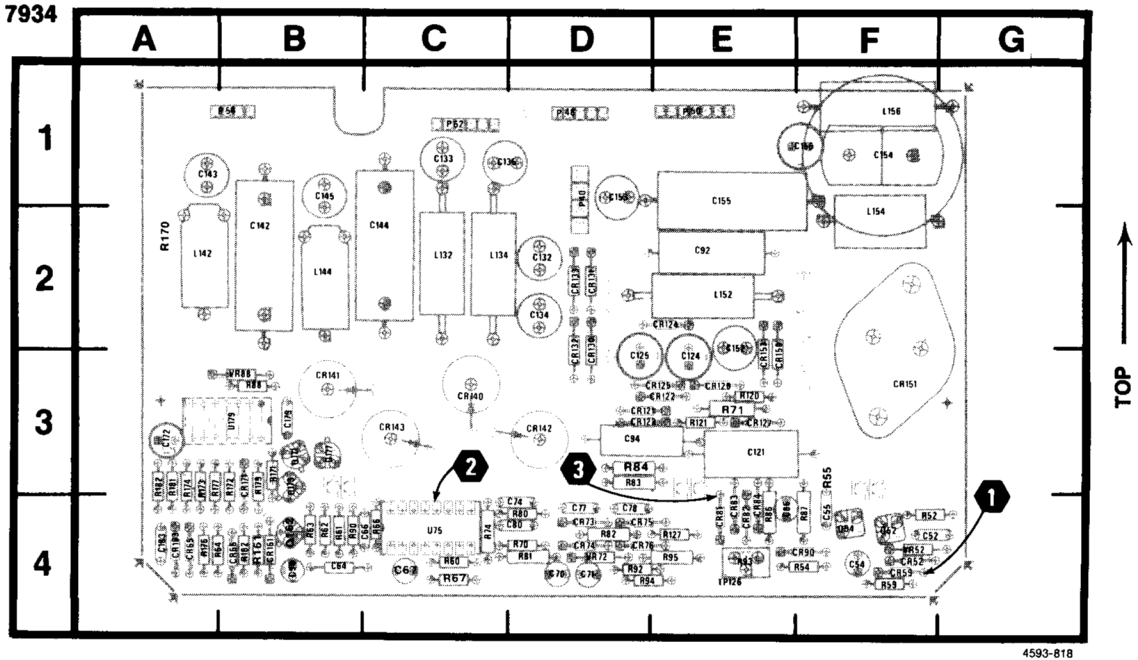

Figure 8-16. A14A1-Control Rectifier Circuit Board Assembly.

http://manoman.sqhill.com

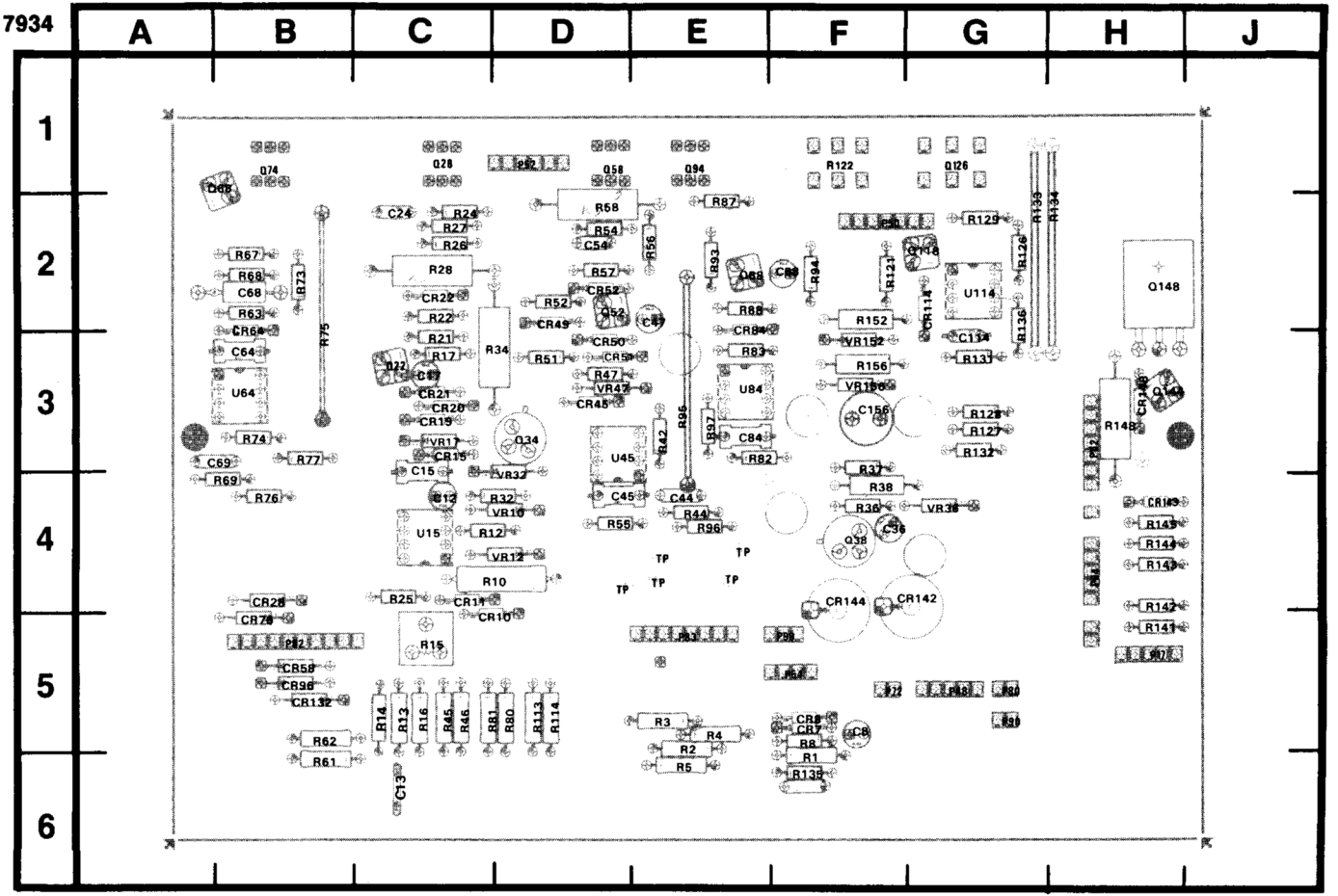

Figure 8-17. A14A2-LV Regulator Circuit Board Assembly.

http://manoman.sqhill.com

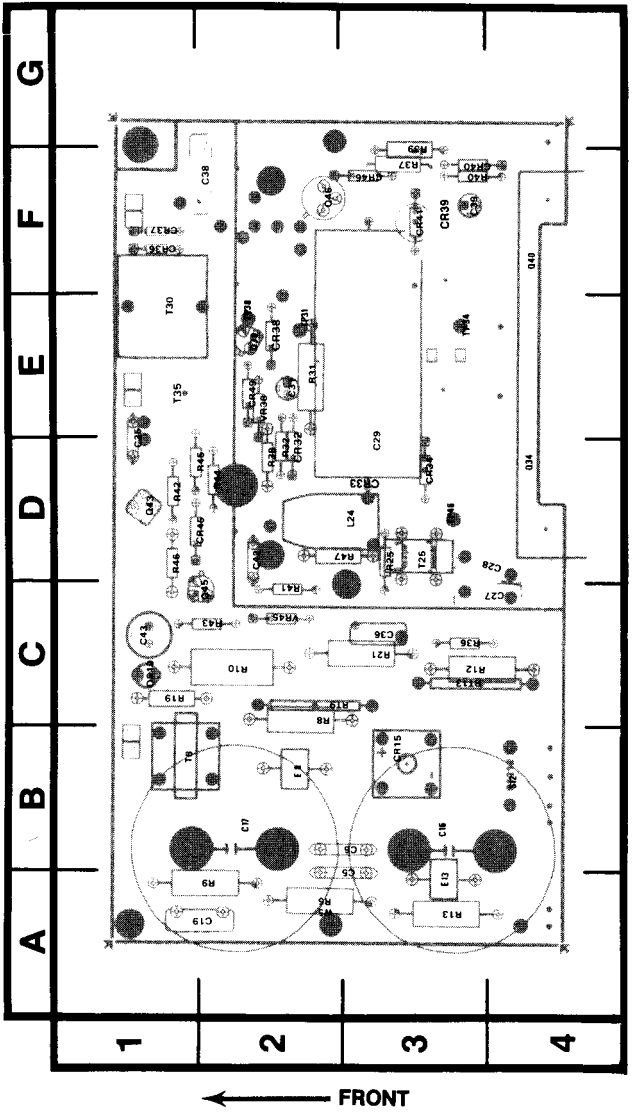

Figure 8-18. A14A3-Inverter Circuit Board Assembly.

http://manoman.sqhill.com

ASSEMBLY A14A1 — Control Rectifier Circuit Board

CIRCUIT NUMBER	SCHEM LOCATION	BOARD LOCATION	CIRCUIT NUMBER	SCHEM LOCATION	BOARD LOCATION	CIRCUIT NUMBER	SCHEM LOCATION	BOARD LOCATION
C52	B3	F4	CR120	E1	E3	R61	B4	B4
C54	C3	F4	CR121	F1	D3	R62	B4	B4
C55	C3	F4	CR122	E2	E3	R63	B4	B4
C64	C4	B4	CR123	F2	D3	R64	B5	A4
C66	C5	C4	CR124	E1	E2	R66	C5	C4
C67	C4	C4	CR125	E2	E3	R67	C4	C4
C70	D3	D4	CR127	F1	E3	R70	C3	D4
C71	D4	D4	CR130	E2	D2	R71	D4	E3
C74	C4	D4	CR131	F2	D2	R74	C4	C4
C77	D3	D4	CR132	E2	D2	R80	C5	D4
C78	D3	D4	CR133	F2	D2	R81	C4	D4
C80	C5	D4	CR140	E2	C3	R82	D4	D4
C86	D5	E4	CR141	F2	B3	R83	D5	D3
C90	D4	B4	CR142	E2	D3	R84	C5	D4
C92	D4	E2	CR143	F2	C3	R86	D5	E4
C94	D2	D3	CR150	E3	E3	R87	D5	F4
C121	F2	E3	CR151	E3	F3	R88	D5	B3
C124	E1	E3	CR153	E3	E3	R90	D4	B4
C125	E2	D3	CR161	E4	B4	R92	D4	D4
C132	F2	D2	CR171	E4	B3	R93	D4	E4
C133	F2	C1	CR183	F3	A4	R94	D4	D4
C134	F2	D2				R95	D4	E4
C135	F2	C1	L132	F2	C2	R120	E2	E3
C142	F2	B2	L134	F2	C2	R121	F2	E3
C143	F2	A1	L142	F2	A2	R127	F1	E4
C144	F3	C2	L144	F3	B2	R161	E4	B4
C145	F3	B1	L152	F3	E2	R162	E3	B4
C152	F3	E2	L154	F3	F2	R170	E5	A2
C153	F3	D1	L156	F3	F1	R171	E4	B3
C154	F3	F1				R172	E4	B2
C155	F3	E1	P40	E1	D1	R173	E4	A3
C156	F3	F1	P48	G2	D1	R174	E4	A3
C172	E4	A3	P50	G3	E1	R176	E4	A4
C179	G4	B3	P52	G2	C1	R177	F4	A3
C183	F4	A4	P54	E5	B1	R179	F4	B3
			P54	F4	B1	R181	E3	A3
CR52	B3	F4				R182	E3	A3
CR59	B3	F4	Q52	B3	F4			
CR65	B4	A4	Q54	C3	F4	TP126	F1	E4
CR66	B4	B4	Q162	E4	B4			
CR73	D3	D4	Q171	E4	B3	U75	C4	C4
CR74	D3	D4	Q173	E4	B3	U179A	F4	B3
CR75	D4	D4	Q177	F4	B3	U179B	F4	B3
CR76	D4	D4				U179C	F4	B3
CR81	D5	E4	R52	B3	F4			
CR82	D5	E4	R54	C3	F4	VR52	B3	F4
CR83	D5	E4	R55	C3	F3	VR72	D3	D4
CR84	D5	E4	R59	C3	F4	VR88	D5	B3
CR90	D4	F4	R60	B3	C4			

ASSEMBLY A14A2 — Partial LV Regulator Circuit Board

CIRCUIT NUMBER	SCHEM LOCATION	BOARD LOCATION	CIRCUIT NUMBER	SCHEM LOCATION	BOARD LOCATION	CIRCUIT NUMBER	SCHEM LOCATION	BOARD LOCATION
C8	E5	F5	P72	E4	F5	R3	E5	E5
CR7	E5	F5	P82	G5	B5	R4	E5	E5
CR8	E5	F5	P83	G5	E5	R5	F5	E6
P54	E5	F5	R1	E5	F6	R8	E5	F5
P54	F4	F5	R2	E5	E5			

ASSEMBLY A14A3 — Inverter Circuit Board

CIRCUIT NUMBER	SCHEM LOCATION	BOARD LOCATION	CIRCUIT NUMBER	SCHEM LOCATION	BOARD LOCATION	CIRCUIT NUMBER	SCHEM LOCATION	BOARD LOCATION
C5	A2	A3	DS19	B1	C1	R42	D2	D1
C16	B1	B3	E8	B1	B2	R43	D2	C2
C17	B1	B2	E13	A1	A3	R44	D1	D2
C19	B1	A2	L24	C1	D3	R45	D1	D2
C27	C1	C4				R46	D2	D1
C28	C1	C4	Q30	C2	E2	R47	D1	D3
C29	C1	E3	Q34	D1	D4			
C31	C1	E2	Q40	D2	F4	RT9	B3	C2
C35	D2	E1	Q43	D2	D1	RT13	A1	C3
C36	E2	C3	Q45	D1	C2			
C38	C2	F1	Q46	C2	F2	S12	A1	B4
C39	C2	F3	R5	F5	A2			
C42	D2	D2	R9	B2	A2	T8	B2	B1
C43	D2	C1	R10	B3	C2	T25	C1	D3
			R12	A1	C3	T30	C1	E1
CR15	B1	B3	R13	A1	A3	T35	D2	E1
CR32	C1	D2	R19	B1	C1			
CR33	C1	D3	R21	B1	C3	TP31	C1	E2
CR34	D1	D3	R25	C1	D3	TP34	D1	E3
CR36	C2	F1	R31	C1	E2	TP38	C2	E2
CR37	C2	F1	R32	C1	D2	TP46	C2	D3
CR38	E1	E2	R36	E2	C3			
CR39	D1	F3	R37	C2	F3	VR38	C2	F2
CR40	C2	F3	R38	C2	D2	VR45	A2	D3
CR41	D2	F3	R39	C2	G3			
CR45	D1	D2	R40	C2	F3	W5	A2	B3
CR46	C2	F3	R41	D2	C2			
CR49	D2	E2						

CHASSIS MOUNTED PARTS (not pictured)

CIRCUIT NUMBER	SCHEM LOCATION	BOARD LOCATION	CIRCUIT NUMBER	SCHEM LOCATION	BOARD LOCATION	CIRCUIT NUMBER	SCHEM LOCATION	BOARD LOCATION
C37	E1	Chassis	L37	D1	Chassis	R6	A4	Chassis
F10	A3	Chassis	P10	A4	Chassis	S10	A3	Chassis
FL10	A4	Chassis	P11	A3	Chassis			
						T110	E2	Chassis

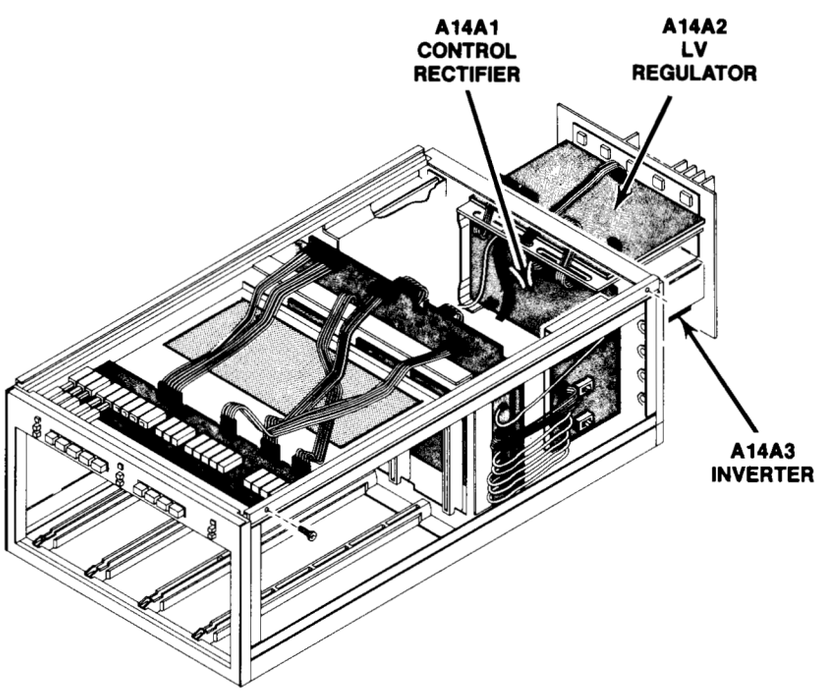

http://manoman.sqhill.com

VOLTAGE CONDITIONS

The voltages shown were obtained with the 7934 controls set as follows:

Front panel controls (knob type) at midrange; VERTICAL MODE, LEFT; TRIGGER SOURCE, VERT MODE; NON STORE button, in HORIZONTAL MODE A. No plug-in units are installed.

Voltage Conditions. The voltages shown on the diagram were obtained using a digital multimeter with a 10 MΩ input impedance (Tektronix DM501 Digital Multimeter or Tektronix 7D13 Digital Multimeter used with readout equipped, 7000-series oscilloscope).

http://manoman.sqhill.com

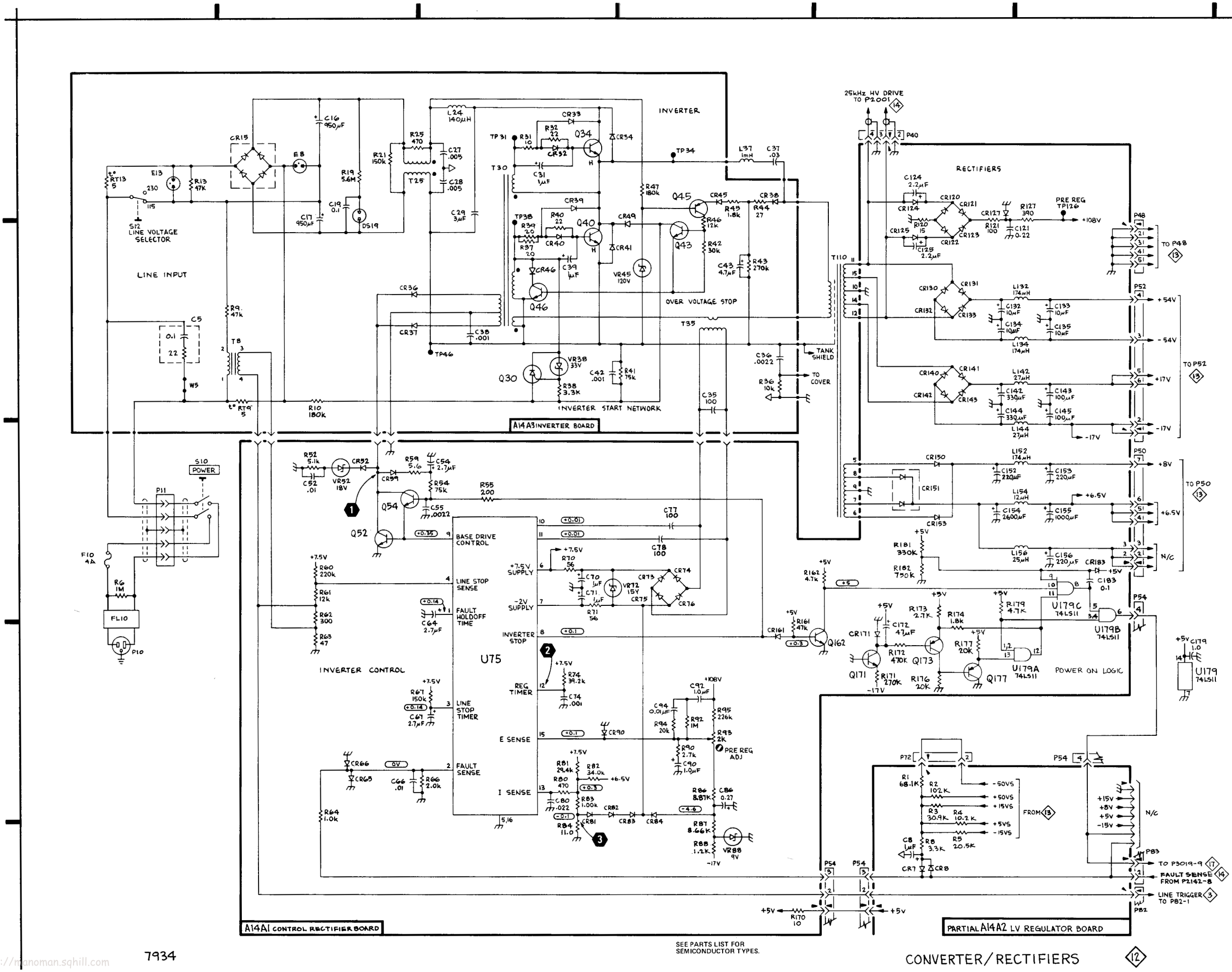

http://manoman.sqhill.com

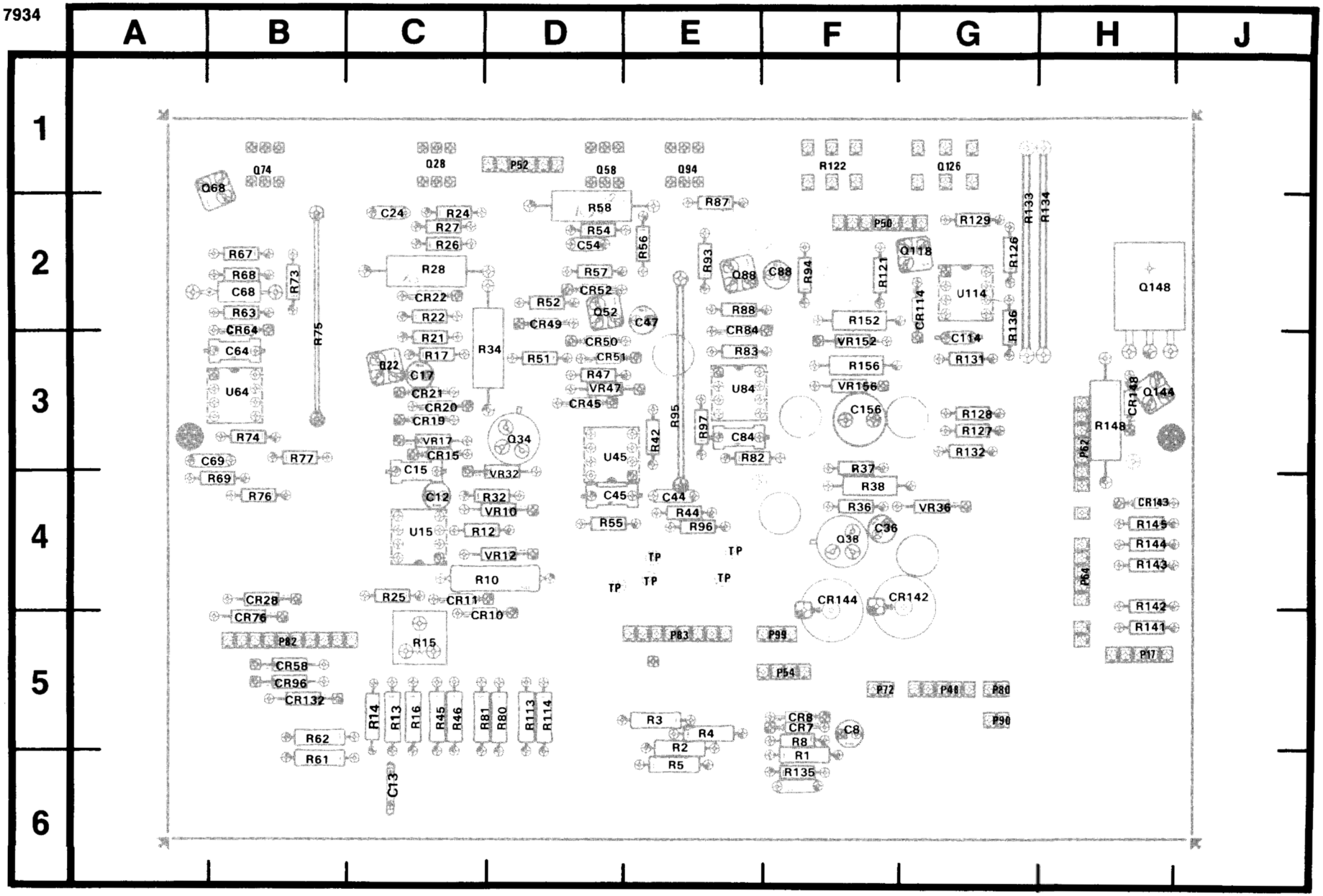

Figure 8-19. A14A2-Partial LV Regulator Circuit Board Assembly.

4593-819

http://manoman.sqhill.com

ASSEMBLY A14A2 — Partial LV Regulator Circuit Board

CIRCUIT NUMBER	SCHEM LOCATION	BOARD LOCATION	CIRCUIT NUMBER	SCHEM LOCATION	BOARD LOCATION	CIRCUIT NUMBER	SCHEM LOCATION	BOARD LOCATION
C12	A1	C4	P83	F3	E5	R73	E1	B2
C13	B2	C6	P90	A4	G5	R74	E2	B3
C15	B2	C3	P99	D4	F5	R75	E1	B2
C17	B1	C3				R76	E1	B4
C24	B1	C2	Q22	B1	C3	R77	E1	B3
C36	B2	F4	Q28	B1	C1	R80	D3	D5
C44	B2	34	Q34	A2	D3	R81	D3	C5
C45	B3	D4	Q38	B2	F4	R82	D2	E3
C47	B3	E2	Q52	B3	D2	R83	E2	E3
C54	B3	D2	Q58	B3	D1	R87	E2	E2
C64	D1	B3	Q68	E1	B1	R88	E3	E2
C68	E1	B2	Q74	E1	B1	R93	E2	E2
C69	E1	B3	Q88	E2	E2	R94	E2	F2
C84	D3	E3	Q94	E2	E1	R95	E2	E3
C88	E3	F2	Q118	E3	G2	R96	E2	E4
C114	D3	G2	Q122	E3	F1	R97	E2	E3
C156	D2	F3	Q126	E3	G1	R113	D3	D5
			Q144	D4	G5	R114	D3	D5
CR10	A1	D5	Q148	E4	G5	R121	E4	F2
CR11	A1	C4				R126	E3	G2
CR15	B1	C3	R10	A1	D4	R127	E3	G3
CR19	B1	C3	R12	A1	C4	R128	E4	G3
CR20	B1	C3	R13	B2	C6	R129	E3	G2
CR21	B1	C3	R14	A2	C5	R131	E3	G3
CR22	B1	C2	R15	A2	C5	R132	E3	G3
CR28	C1	B4	R16	B2	C5	R133	E3	G2
CR45	B3	D3	R17	B1	C3	R134	E3	H2
CR49	B3	D2	R21	B1	C3	R135	F3	F6
CR50	B3	D3	R22	B1	C2	R136	E3	G2
CR51	B3	D3	R24	B1	C2	R141	D4	H5
CR52	B3	D2	R25	B2	C4	R142	D4	H4
CR58	C3	B5	R26	B1	C2	R143	D4	H4
CR64	D1	B2	R27	C1	C2	R144	E4	H4
CR76	E1	B5	R28	B1	C2	R145	E4	H4
CR84	D2	E2	R32	A2	D4	R148	E4	G5
CR96	E2	B5	R34	A2	D3	R152	D2	F2
CR114	D3	G2	R36	B2	F4	R156	D2	F3
CR132	F3	B5	R37	B2	F3			
CR142	D4	G4	R38	B2	F4	U15	A1	C4
CR143	D4	H4	R42	A3	E3	U45	A3	D3
CR144	D4	F4	R44	B2	E4	U64A	D1	B3
CR148	E4	G5	R45	A3	C5	U64B	E2	B3
			R46	B3	C5	U84A	E2	E3
P17	D4	H5	R47	B3	D3	U84B	D2	E3
P48	C3	G5	R51	B3	D3	U114A	D3	G2
P50	D5	F2	R52	B3	D2	U114B	E4	G2
P52	A1	D1	R54	B3	D2			
P52	D1	D1	R56	B3	D4	VR10	A1	D4
P62	F5	G5	R57	C3	D2	VR12	A1	D4
P82	C1	B5	R58	B3	D2	VR17	B1	C3
P82	C3	B5	R61	D1	B6	VR32	A2	D3
P82	F1	B5	R62	D1	B5	VR36	B2	G4
P82	F3	B5	R63	E2	B2	VR47	B3	D3
P83	C2	E5	R67	E1	B2	VR152	D2	F3
P83	F1	E5	R68	E1	B2	VR156	D2	F3

CHASSIS MOUNTED PARTS (not pictured)

CIRCUIT NUMBER	SCHEM LOCATION	BOARD LOCATION	CIRCUIT NUMBER	SCHEM LOCATION	BOARD LOCATION	CIRCUIT NUMBER	SCHEM LOCATION	BOARD LOCATION
B90	A4	Chassis	R90	A4	Chassis	S99	D4	Chassis

http://manoman.sqnet.com

VOLTAGE CONDITIONS

The voltages shown were obtained with the 7834 controls set as follows:

Front panel controls (knob type) at midrange; VERTICAL MODE, LEFT; TRIGGER SOURCE, VERT MODE; NON STORE button, in HORIZONTAL MODE A. No plug-in units are installed.

Voltage Conditions. The voltages shown on the diagram were obtained using a digital multimeter with a 10 MΩ input impedance (Tektronix DM501 Digital Multimeter or Tektronix 7D13 Digital Multimeter used with readout equipped, 7000-series oscilloscope).

http://manoman.sqhill.com

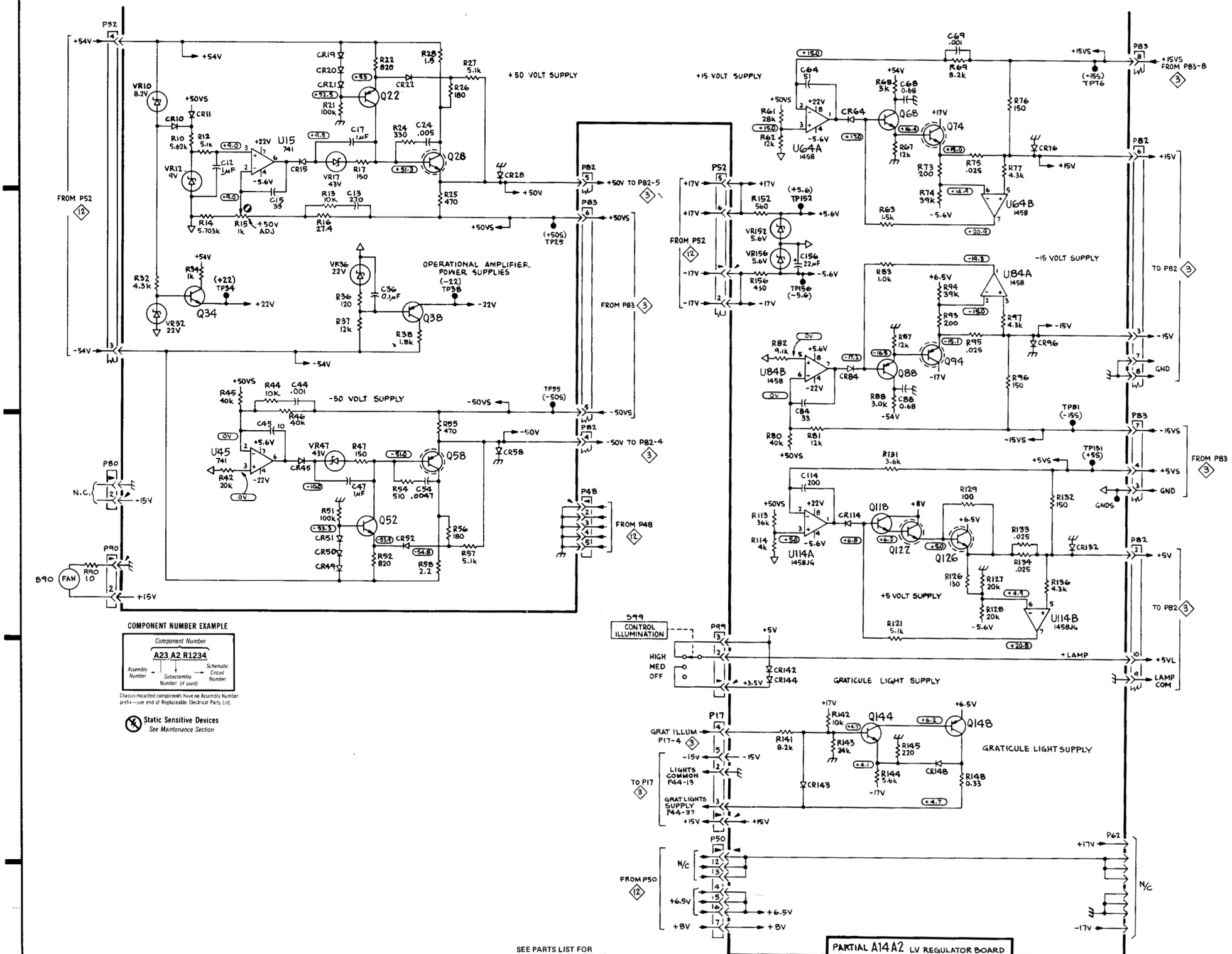

7934

LOW-VOLTAGE REGULATORS 13

http://manoman.sqhill.com

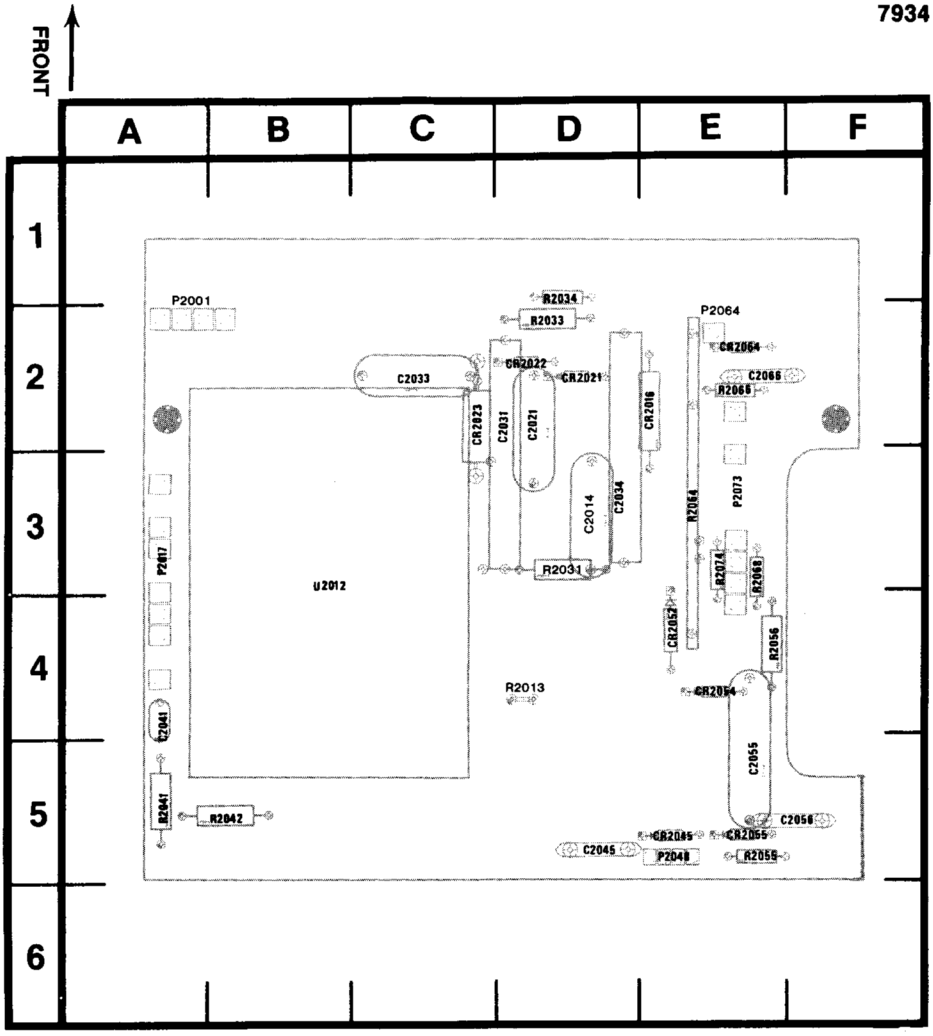

5880-207

Figure 8-21. A22-High Voltage Circuit Board Assembly (front).

http://manomanuals.com

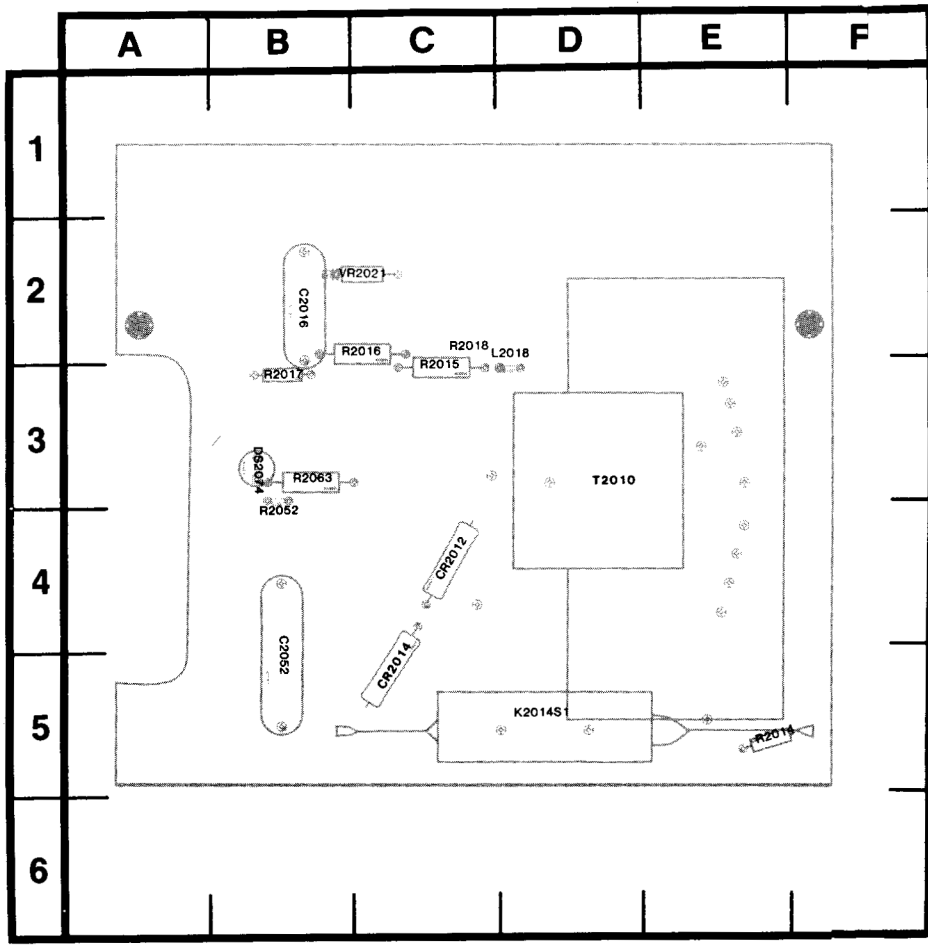

5880-208

FRONT

Figure 8-22. A22-High Voltage Circuit Board Assembly (rear).

http://manoman.sqhill.com

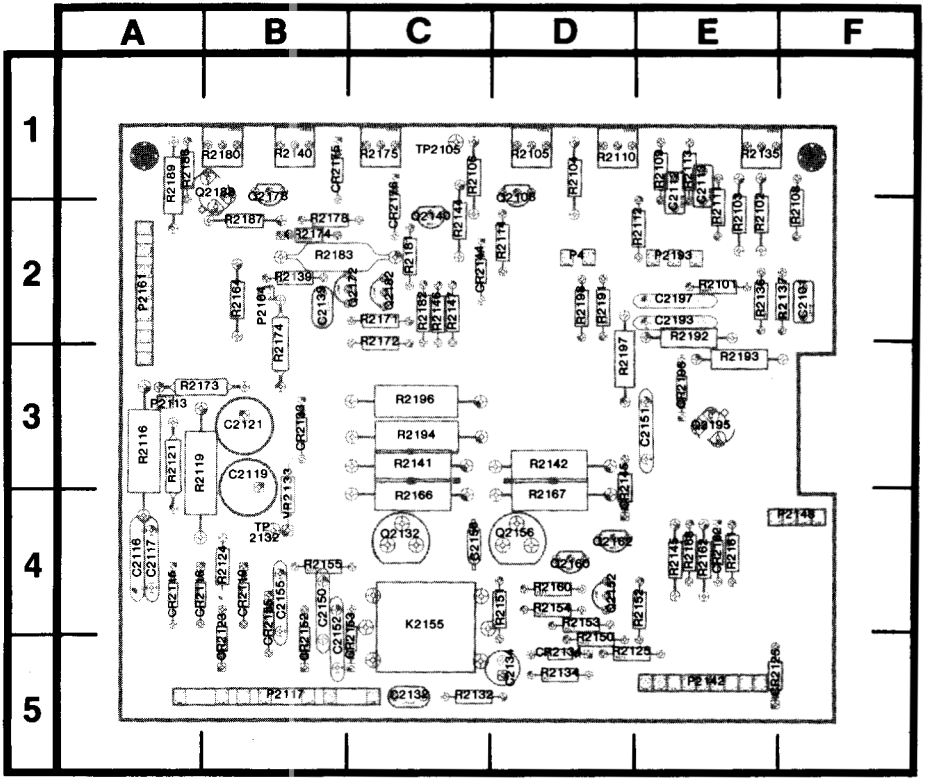

5880-209

FRONT

Figure 8-23. A23-Focus Circuit Board Assembly.

www.mcgraw-hill.com

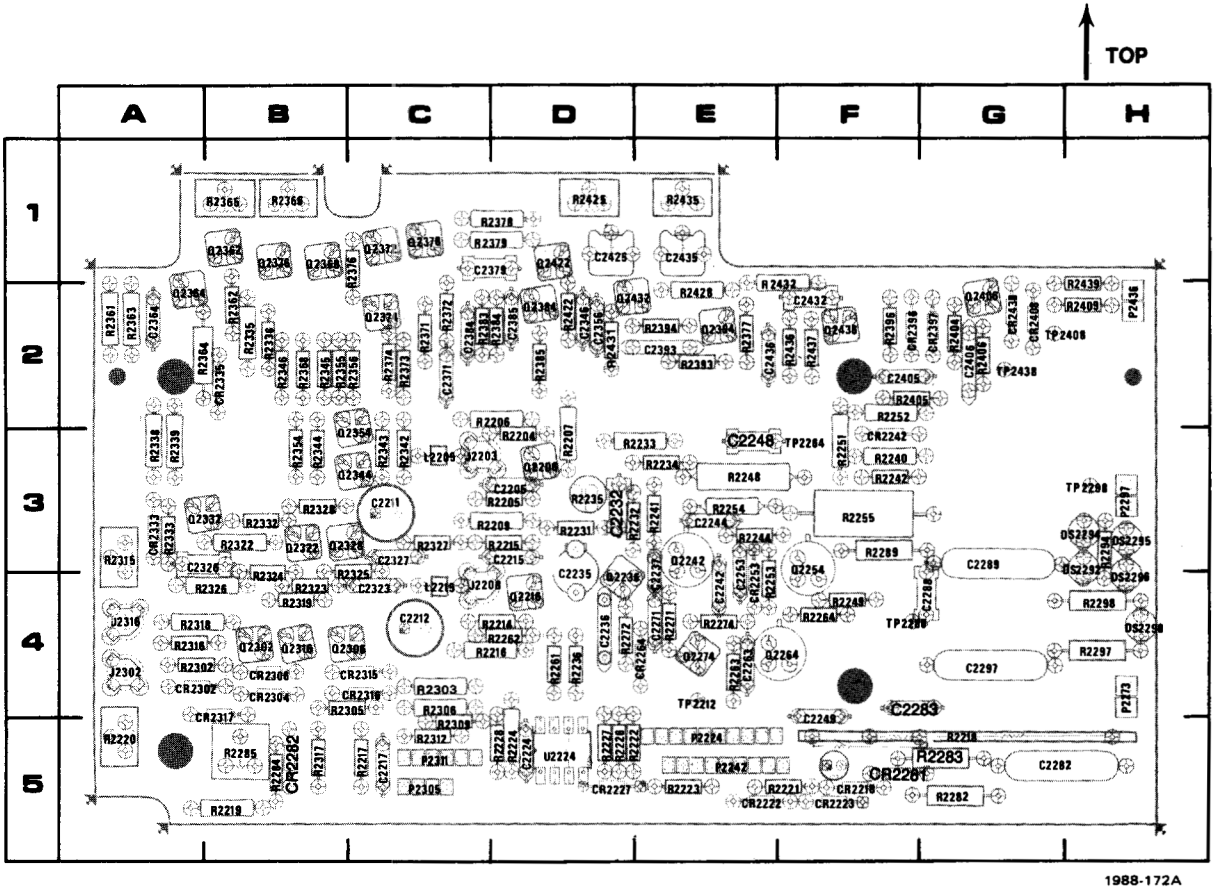
TOP
A
B
C
D
E
F
G
H
1
2
3
4
5
C2248
C2232
C2211
C2212
C2283
C2282
C2289
C2297
R2283
CR2281
CR2282
R2255
R2248
R2289
R2297
R2298
R2282
R2285
R2220
R2219
R2303
R2306
R2312
R2224
R2242
R2274
R2264
R2218
R2252
R2240
R2242
R2251
R2233
R2234
R2235
R2254
R2244
R2241
R2231
R2232
R2215
R2209
R2206
R2204
R2207
R2208
R2205
R2221
R2222
R2223
R2227
R2217
R2316
R2318
R2302
R2315
R2326
R2322
R2332
R2328
R2324
R2325
R2323
R2319
R2338
R2339
R2344
R2343
R2342
R2361
R2363
R2364
R2362
R2365
R2366
R2378
R2379
R2425
R2435
R2428
R2432
R2439
R2409
R2438
R2405

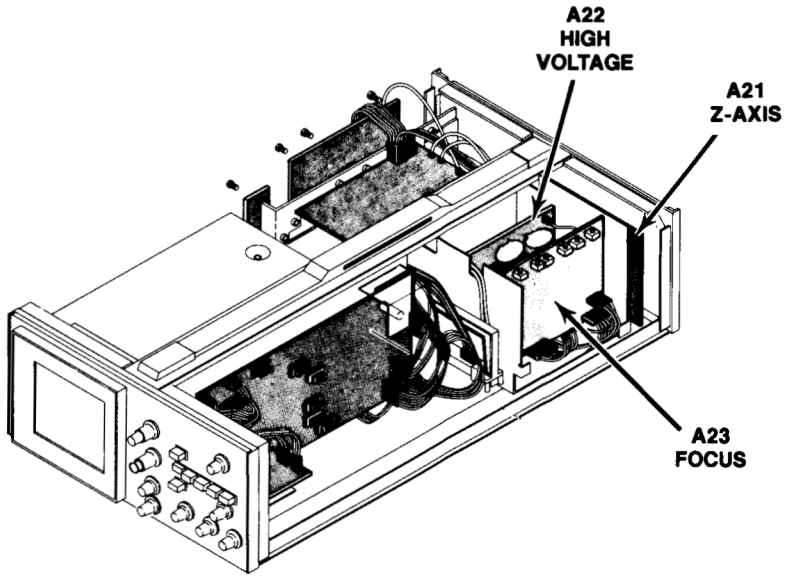

ASSEMBLY A21 — Partial Z Axis Circuit Board

CIRCUIT NUMBER	SCHEM LOCATION	BOARD LOCATION	CIRCUIT NUMBER	SCHEM LOCATION	BOARD LOCATION	CIRCUIT NUMBER	SCHEM LOCATION	BOARD LOCATION
C2205	D4	D3	L2205	D4	C3	R2232	E4	D3
C2211	B5	C3	L2215	D4	C4	R2233	E4	E3
C2212	B5	C4				R2234	E4	E3
C2215	D4	D3	P2224	A4	E5	R2235	D4	D3
C2217	B5	C5	P2224	C5	E5	R2236	E4	D4
C2218	D5	F5	P2242	B4	E5	R2240	E4	F3
C2224	E5	D5	P2242	F3	E5	R2241	E4	E3
C2232	E4	D3	P2273	F3	H4	R2242	E4	F3
C2235	D4	D4	P2297	G4	H3	R2244	E4	E3
C2236	E4	D4				R2248	E4	E3
C2237	E4	E4	Q2206	D4	D3	R2249	E4	F4
C2242	E4	E4	Q2216	D4	D4	R2251	E4	F3
C2244	E4	E3	Q2236	E4	D4	R2252	E4	F2
C2248	E4	E3	Q2242	E4	E3	R2253	E4	E4
C2249	F4	F5	Q2254	E4	F3	R2254	E4	E3
C2253	E4	E4	Q2264	E5	F4	R2255	E4	F3
C2263	E5	E4	Q2274	E5	E4	R2261	E4	D4
C2271	E5	E4				R2262	E5	D4
C2282	F5	G5	R2204	D4	D3	R2263	E5	E4
C2283	F5	F4	R2205	D4	D3	R2264	E4	F4
C2288	F4	G4	R2206	D4	C2	R2271	E5	E4
C2289	F4	G3	R2207	D4	D3	R2272	E5	D4
C2297	G5	G4	R2209	D5	D4	R2274	E5	E4
			R2214	D4	D4	R2282	F5	G5
CR2218	E5	F5	R2215	D4	D3	R2283	F5	G5
CR2223	E5	F5	R2216	D4	D4	R2284	F5	B5
CR2227	E5	B4	R2217	D5	C5	R2285	F5	B5
CR2242	E4	F3	R2218A	D5	G5	R2289	F4	F3
CR2253	E4	E4	R2218B	F5	G5	R2294	G4	H3
CR2264	E5	E4	R2218C	F5	G5	R2297	G5	H4
CR2281	F5	F5	R2219	E5	B5	R2298	G5	H4
CR2282	F5	B5	R2220	D5	A5			
			R2221	E5	F5	TP2212	B5	E4
DS2292	G4	H3	R2222	E5	D5	TP2264	F4	F3
DS2295	G5	H3	R2223	E5	E5	TP2288	F4	F4
DS2296	G5	H4	R2224	E5	D5	TP2298	G5	H3
DS2298	G5	H4	R2226	F5	D5			
			R2227	F5	D5	U2224	E5	D5
J2203	D4	C3	R2228	F5	D5			
J2208	D4	C4	R2231	D4	D3			

ASSEMBLY A22 — High Voltage Circuit Board

CIRCUIT NUMBER	SCHEM LOCATION	BOARD LOCATION	CIRCUIT NUMBER	SCHEM LOCATION	BOARD LOCATION	CIRCUIT NUMBER	SCHEM LOCATION	BOARD LOCATION
C2014	E1	D3	CR2064	D1	E2	R2017	F1	B3 (back)
C2016	F1	B2 (back)				R2018	A1	C2 (back)
C2021	B1	D2	DS2074	F1	B3 (back)	R2031	C1	D3
C2031	C1	D2				R2033	C1	D2
C2033	C1	C2	K2014	B1	D5 (back)	R2034	C1	D1
C2034	C1	D3	K2014S1	A1	D5 (back)	R2041	E1	A5
C2041	E1	A4				R2042	E1	A5
C2045	E1	D5	L2018	A1	D3 (back)	R2052	F1	B3 (back)
C2052	F1	B5 (back)				R2055	E2	E5
C2055	F2	E5	P2001	A2	A2	R2056	F2	E4
C2056	E1	E5	P2017	A2	A3	R2063	F1	B3 (back)
C2066	E1	E2	P2017	C2	A3	R2064A	D1	E3
			P2048	A3	E5	R2064B	D1	E3
CR2012	B1	C4 (back)	P2048	E2	E5	R2066	E1	E2
CR2014	B1	C5 (back)	P2064	D2	E2	R2068	F1	E3
CR2016	F1	E2	P2073	A1	E3	R2074	F1	E3
CR2021	C1	D2	P2073	F2	E3			
CR2022	C1	D2				T2010	A1	D3 (back)
CR2023	B1	C2	R2013	A1	D4			
CR2045	E1	D5	R2014	B1	E5 (back)	U2012	B1	B3
CR2052	F1	E4	R2015	E1	E1 (back)			
CR2054	F1	E4	R2016	F1	C2 (back)	VR2021	C1	C2 (back)
CR2055	F1	E5						

ASSEMBLY A23 — Focus Circuit Board

CIRCUIT NUMBER	SCHEM LOCATION	BOARD LOCATION	CIRCUIT NUMBER	SCHEM LOCATION	BOARD LOCATION	CIRCUIT NUMBER	SCHEM LOCATION	BOARD LOCATION
C2101	H2	F2	P2148	E2	F4	R2141	D2	C3
C2112	H3	E1	P2161	D4	A2	R2142	D3	D3
C2113	H3	E1	P2161	E3	A2	R2144	D3	C2
C2116	B2	A4	P2164	D2	B2	R2145	C3	E4
C2117	B2	A4	P2193	F2	E2	R2146	C3	C2
C2119	B2	B3				R2147	C3	C2
C2121	B2	B3	Q2108	H3	D1	R2150	C3	D4
C2132	C2	C5	Q2132	C2	C4	R2151	B3	D4
C2134	C2	D5	Q2140	D3	C2	R2152	C3	E4
C2139	D2	B2	Q2152	C3	D4	R2153	C2	D4
C2150	B3	B4	Q2156	C3	D4	R2154	B3	D4
C2151	B3	E3	Q2160	B3	D4	R2155	B2	B4
C2152	B3	B4	Q2162	C3	D4	R2160	B3	D4
C2155	B2	B4	Q2172	D3	B2	R2161	C3	E4
C2156	B3	C4	Q2178	D3	B1	R2162	C3	E4
C2193	F3	E2	Q2182	E3	C2	R2164	C3	B2
C2197	F2	E2	Q2188	E3	B1	R2166	C2	C3
			Q2195	E3	E3	R2167	C3	D3
CR2115	B2	A4				R2168	C3	E4
CR2118	B2	A4	R2101	H2	E2	R2171	D3	C2
CR2119	B2	B4	R2102	H2	E2	R2172	D3	C2
CR2123	C2	B4	R2103	H2	E2	R2173	D3	A3
CR2125	C2	E4	R2104	H2	D1	R2174	D3	B2
CR2133	D2	B3	R2105	H2	D1	R2175	D3	C1
CR2134	C2	D5	R2106	H2	C1	R2178	E3	B2
CR2144	D3	C2	R2108	H3	F1	R2180	D3	B1
CR2145	D3	D3	R2109	H3	E1	R2181	E3	C2
CR2152	B3	B4	R2110	H3	D1	R2182	E3	C2
CR2153	B3	B4	R2111	H3	E1	R2183	E3	B2
CR2155	B2	B4	R2112	H3	D2	R2187	E3	B2
CR2162	C3	E4	R2113	H3	E1	R2188	E3	A1
CR2174	D3	B2	R2114	H3	D2	R2189	E3	A1
CR2175	D3	B1	R2116	B2	A3	R2191	F3	D2
CR2176	D3	C1	R2119	B2	A3	R2192	E3	E2
CR2195	E3	E3	R2121	C2	A3	R2193	E3	E3
			R2124	C2	B4	R2194	E2	C3
K2155	B3	C4	R2125	C2	D4	R2196	E2	C3
K2155S1	B3	C4	R2132	C2	C5	R2197	F2	D3
			R2134	C2	D5	R2198	F2	D2
P2113	B2	A3	R2135	E2	E1			
P2117	A2	B5	R2136	E2	E2	TP2105	H3	C1
P2117	C2	B5	R2137	E2	F2	TP2132	C2	B4
P2142	F3	E5	R2139	D2	B2			
P2148	A3	F4	R2140	D3	B1	VR2133	D2	B3

http://manoman.sqnm.com

VOLTAGE CONDITIONS

The voltages shown were obtained with the 7934 controls set as follows:

Front panel controls (knob type) at midrange; VERTICAL MODE, LEFT; TRIGGER SOURCE, VERT MODE; NON STORE button, in HORIZONTAL MODE A. No plug-in units are installed.

Voltage Conditions. The voltages shown on the diagram were obtained using a digital multimeter with a 10 MΩ input impedance (Tektronix DM501 Digital Multimeter or Tektronix 7D13 Digital Multimeter used with readout equipped, 7000-series oscilloscope).

http://manoman.sqhill.com

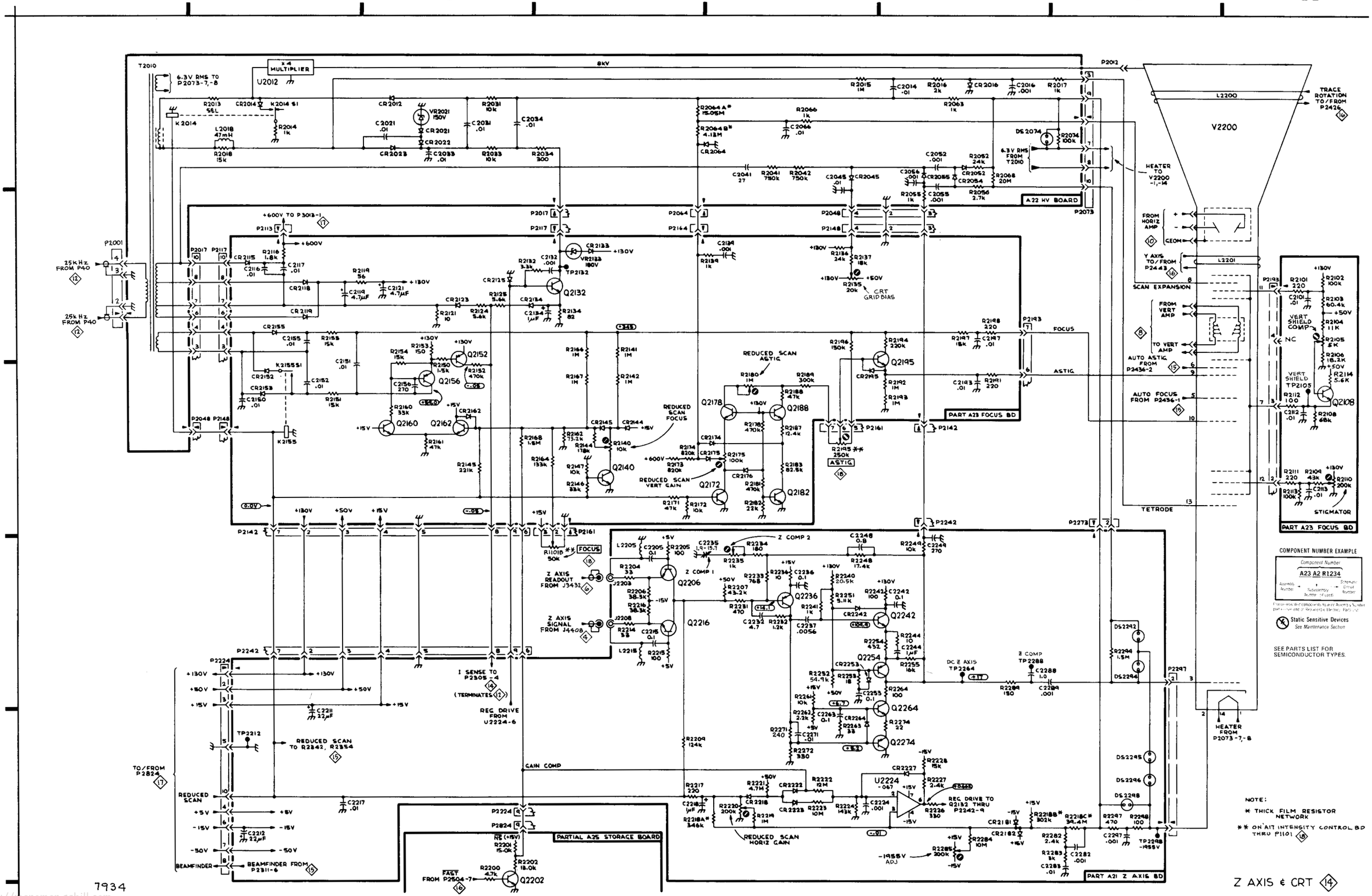

http://manoman.sqhill.com

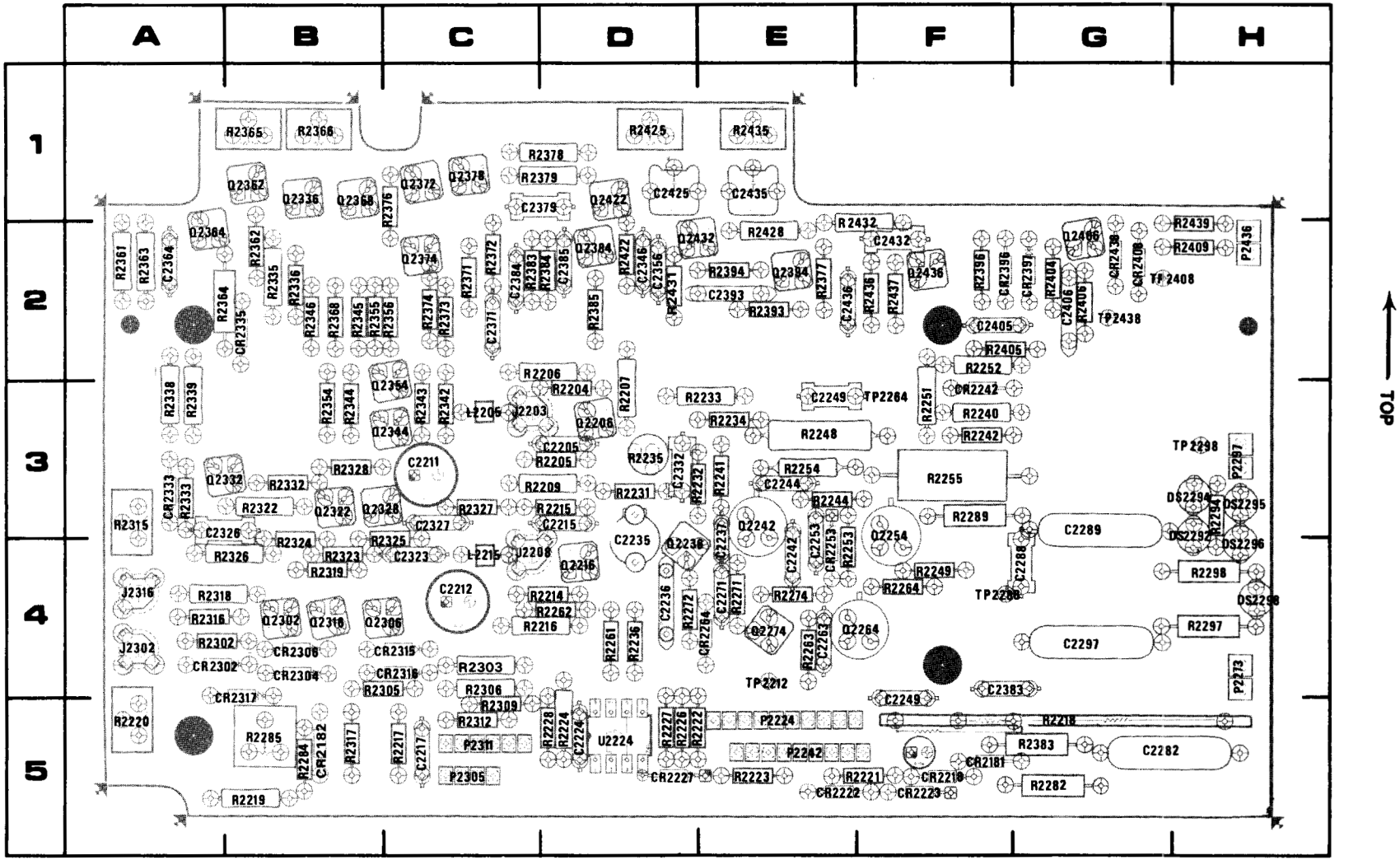

5880-210

Figure 8-24. A21-Z-axis Circuit Board Assembly.

http://manoman.sqhill.com

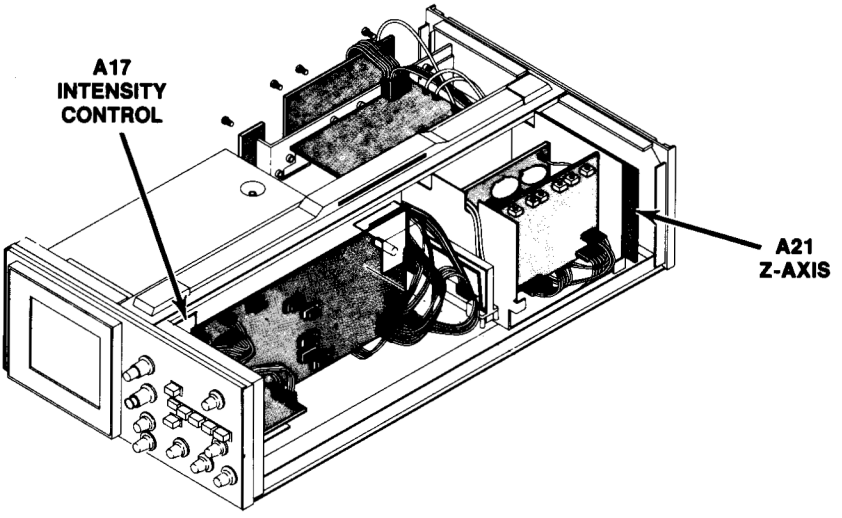

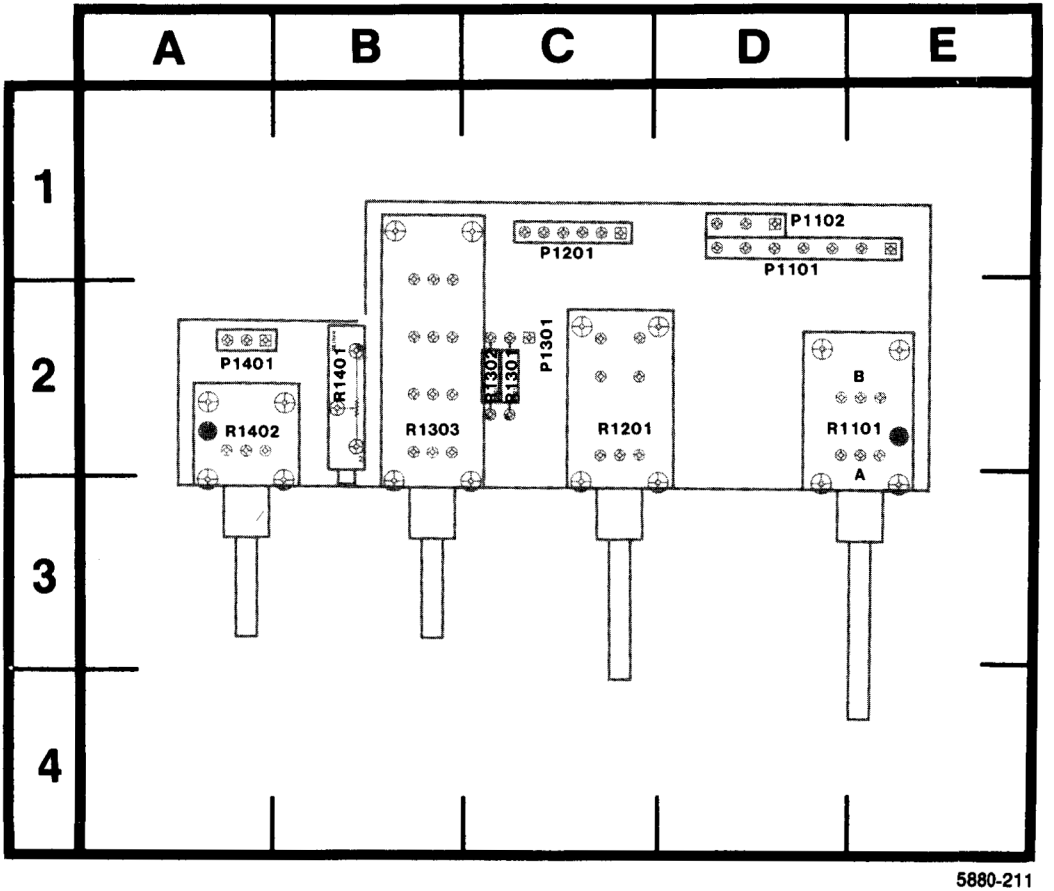

Figure 8-25. A17-Intensity Control Circuit Board Assembly.

http://manoman.sqhill.com

ASSEMBLY A17 — Partial Intensity Control Circuit Board

CIRCUIT NUMBER	SCHEM LOCATION	BOARD LOCATION	CIRCUIT NUMBER	SCHEM LOCATION	BOARD LOCATION	CIRCUIT NUMBER	SCHEM LOCATION	BOARD LOCATION
R1101A	D6	E2	S1201	F6	D2			
R1201	E6	D2	S1303	C6	C2			
R1301	D6	C2						
R1303	D6	C2						

ASSEMBLY A21 — Partial Z Axis Circuit Board

CIRCUIT NUMBER	SCHEM LOCATION	BOARD LOCATION	CIRCUIT NUMBER	SCHEM LOCATION	BOARD LOCATION	CIRCUIT NUMBER	SCHEM LOCATION	BOARD LOCATION
C2323	C4	C4	Q2344	C1	B3	R2345	C1	B2
C2326	C4	A3	Q2354	C2	B3	R2346	C1	B2
C2327	D4	C3	Q2362	D1	B1	R2354	B2	B3
C2346	C1	D2	Q2364	B3	A2	R2355	C2	B2
C2356	C2	D2	Q2368	D2	B1	R2356	C2	C2
C2364	B3	A2	Q2372	E3	C1	R2361	B3	A2
C2371	F2	C2	Q2374	E4	C2	R2362	D1	B2
C2379	F4	C1	Q2378	E3	C1	R2363	B3	A2
C2384	F3	C2	Q2384	F3	D2	R2364	B3	A2
C2385	F4	C2	Q2394	F4	E2	R2365	D1	B1
C2393	F4	E2	Q2406	G4	G2	R2366	D2	B1
C2405	F5	F2	Q2422	F1	D1	R2368	D2	B2
C2406	G4	G2	Q2432	F2	D2	R2371	F2	C2
C2425	G1	D1	Q2436	G2	F2	R2372	E3	C2
C2432	G3	F2				R2373	E4	C2
C2435	G2	E1	R2302	A4	A4	R2374	E4	C2
			R2303	B5	C4	R2376	E4	C1
CR2302	B4	A4	R2305	B5	B4	R2377	F4	E2
CR2306	A4	B4	R2306	C5	C4	R2378	F3	C1
CR2315	B4	C4	R2309	D5	C5	R2379	F3	C1
CR2316	B4	C4	R2312	E5	C5	R2383	F3	C2
CR2317	B4	B4	R2315	B5	A3	R2384	F3	D2
CR2333	D4	A3	R2316	A4	A4	R2385	F4	D2
CR2335	E4	B2	R2317	B5	B5	R2393	F4	E2
CR2396	F4	F2	R2318	B5	A4	R2394	F4	E2
CR2397	G4	G2	R2319	C4	B4	R2396	F4	F2
CR2408	G2	G2	R2322	C4	B3	R2404	G4	G2
CR2438	G3	G2	R2323	C4	B4	R2405	G5	F2
			R2324	C4	B4	R2406	G4	G2
J2302	A4	A4	R2325	C4	B4	R2409	G2	H2
J2316	A4	A4	R2326	C4	B4	R2422	F1	D2
			R2327	D4	C3	R2425	F1	D1
P2305	A6	C5	R2328	D3	B3	R2428	F2	E2
P2311	C6	C5	R2332	D3	B3	R2431	F2	D2
P2436	G2	H2	R2333	D4	A3	R2432	G3	F2
			R2335	D4	B2	R2435	F2	E1
Q2302	B4	B4	R2336	D4	B2	R2436	G1	F2
Q2306	C4	B4	R2338	E4	A3	R2437	G1	F2
Q2316	B4	B4	R2339	E4	A3	R2439	G3	H2
Q2322	C4	B3	R2342	B1	C3			
Q2328	C4	B3	R2343	B1	C3	TP2438	G3	G2
Q2336	D4	B1	R2344	C1	B3	TP2408	G2	G2

http://manoman.sqhill.com

VOLTAGE CONDITIONS

The voltages shown were obtained with the 7834 controls set as follows:

Front panel controls (knob type) at midrange; VERTICAL MODE, LEFT; TRIGGER SOURCE, VERT MODE; NON STORE button, in HORIZONTAL MODE A. No plug-in units are installed.

Voltage Conditions. The voltages shown on the diagram were obtained using a digital multimeter with a 10 MΩ input impedance (Tektronix DM501 Digital Multimeter or Tektronix 7D13 Digital Multimeter used with readout equipped, 7000-series oscilloscope).

http://manoman.sqhill.com

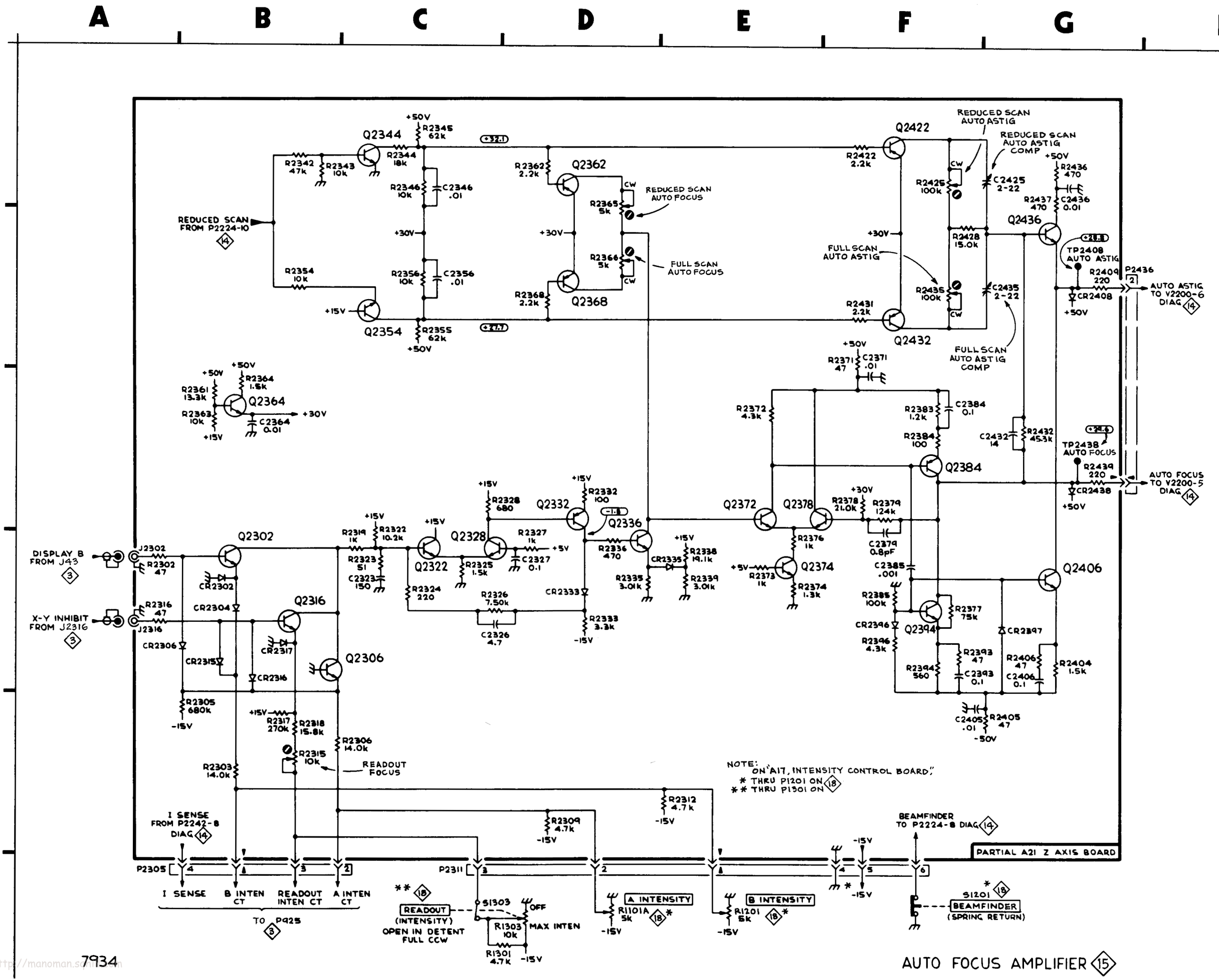
A B C D E F G
1 2 3 4 5 6
Q2344
R2345 62k
R2344 18k
R2342 47k
R2343 10k
R2346 10k
C2346 .01
R2356 10k
C2356 .01
R2354 10k
Q2354
R2355 62k
REDUCED SCAN FROM P2224-10
Q2362
R2362 2.2k
R2365 5k
R2366 5k
R2368 2.2k
Q2368
REDUCED SCAN AUTO FOCUS
FULL SCAN AUTO FOCUS
Q2422
R2422 2.2k
R2425 100k
R2428 15.0k
R2435 100k
R2431 2.2k
Q2432
C2425 2-22
C2435 2-22
REDUCED SCAN AUTO ASTIG
REDUCED SCAN AUTO ASTIG COMP
FULL SCAN AUTO ASTIG
FULL SCAN AUTO ASTIG COMP
R2436 470
R2437 470
C2436 0.01
Q2436
TP2408 AUTO ASTIG
R2409 220
CR2408
P2436
AUTO ASTIG TO V2200-6 DIAG
R2371 47
C2371 .01
R2372 4.3k
R2383 1.2k
C2384 0.1
R2384 100
Q2384
C2432 14
R2432 45.3k
TP2438 AUTO FOCUS
R2439 220
CR2438
AUTO FOCUS TO V2200-5 DIAG
R2361 13.3k
R2363 10k
R2364 1.5k
Q2364
C2364 0.01
Q2372
Q2378
R2378 21.0k
R2379 124k
C2379 0.8pF
R2376 1k
Q2374
R2373 1k
R2374 1.3k
C2385 .001
R2385 100k
Q2394
R2377 75k
R2396 4.3k
CR2396
CR2397
R2393 47
C2393 0.1
R2394 560
R2406 47
C2406 0.1
R2404 1.5k
Q2406
C2405 .01
R2405 47
DISPLAY B FROM J43
J2302
R2302 47
CR2302
CR2304
X-Y INHIBIT FROM J2316
R2316 47
J2316
CR2306
CR2315
CR2316
CR2317
Q2302
Q2316
Q2306
R2305 680k
R2319 1k
R2322 10.2k
R2323 51
C2323 150
R2324 220
Q2322
Q2328
R2328 680
R2325 1.5k
R2327 1k
C2327 0.1
R2326 7.50k
C2326 4.7
Q2332
R2332 100
Q2336
R2336 470
CR2333
R2333 3.3k
CR2335
R2338 19.1k
R2339 3.01k
R2335 3.01k
R2317 270k
R2318 15.8k
R2315 10k
READOUT FOCUS
R2306 14.0k
R2303 14.0k
R2312 4.7k
R2309 4.7k
NOTE: ON "A17, INTENSITY CONTROL BOARD"
* THRU P1201 ON
** THRU P1301 ON
I SENSE FROM P2242-8 DIAG
BEAMFINDER TO P2224-8 DIAG
PARTIAL A21 Z AXIS BOARD
P2305
P2311
I SENSE
B INTEN CT
READOUT INTEN CT
A INTEN CT
TO P925
READOUT (INTENSITY) OPEN IN DETENT FULL CCW
S1303
OFF
R1303 10k
MAX INTEN
R1301 4.7k
A INTENSITY
R1101A 5k
B INTENSITY
R1201 5k
S1201
BEAMFINDER (SPRING RETURN)
7934
AUTO FOCUS AMPLIFIER

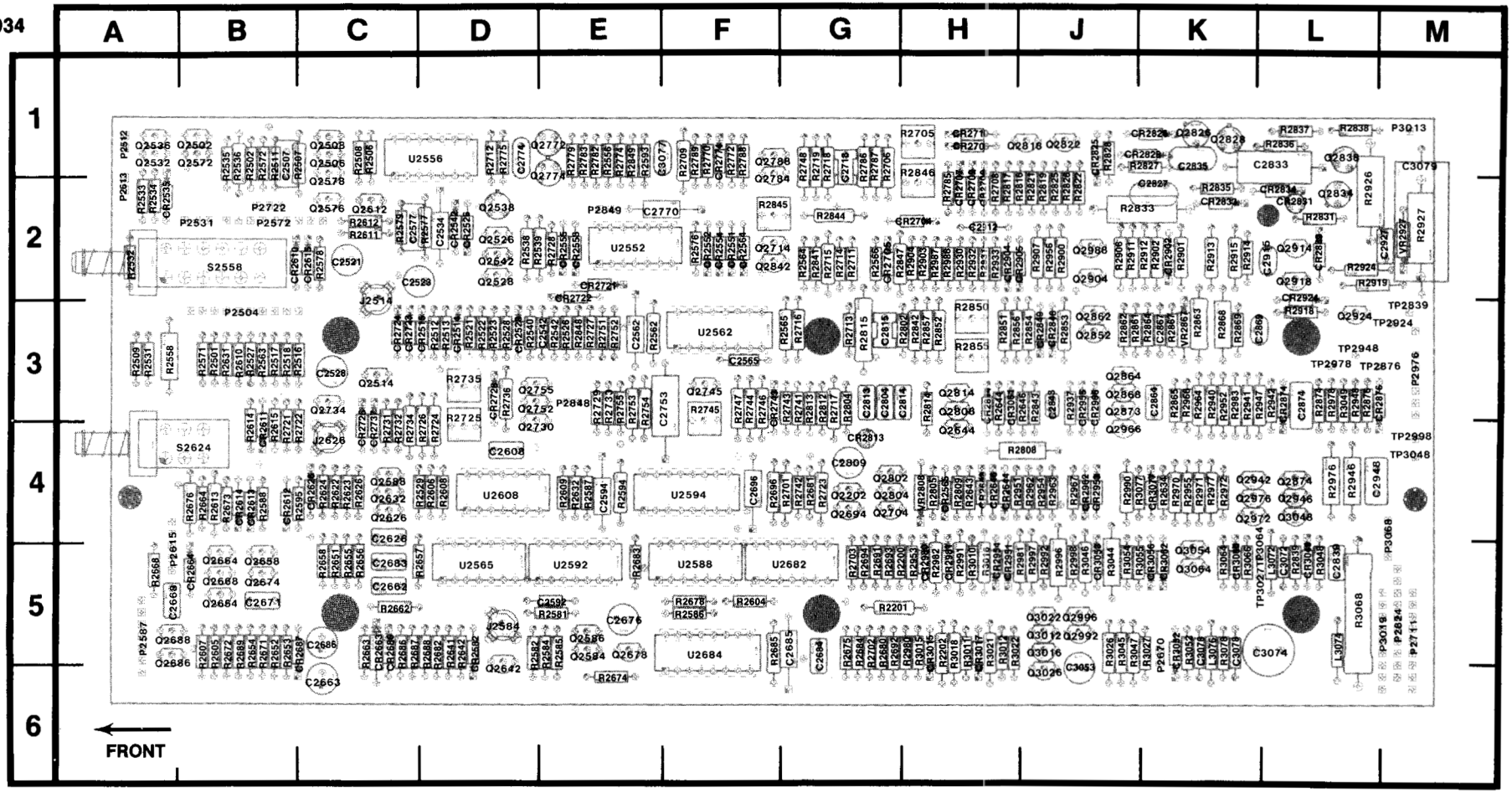

Figure 8-26. A25-Storage Circuit Board Assembly.

5880-212

http://manoman.sqhill.com

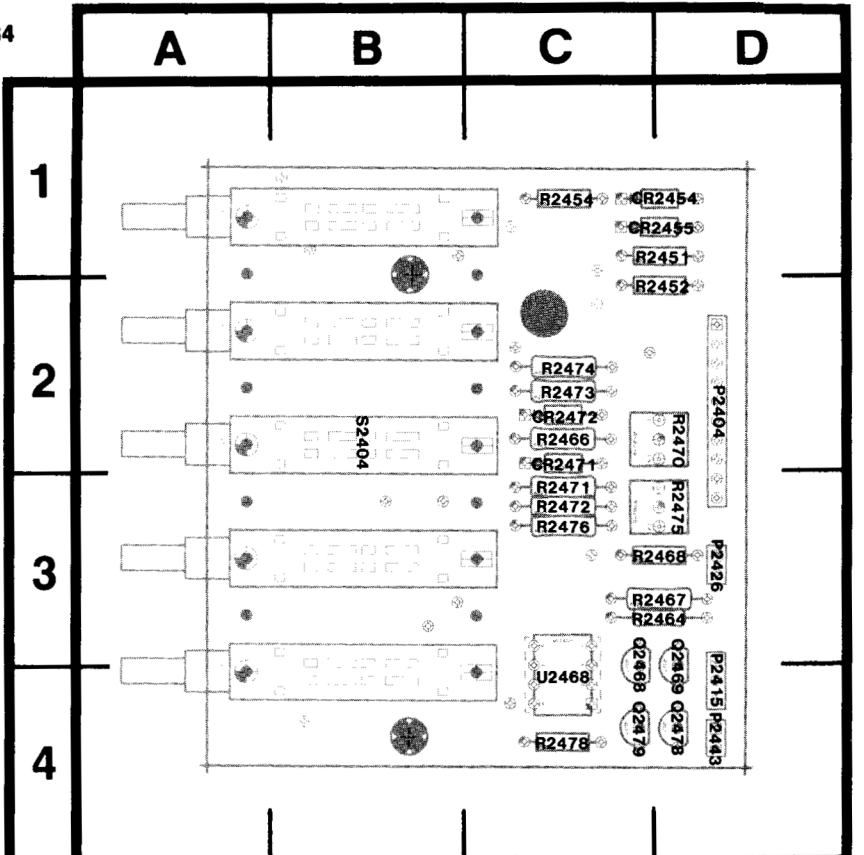

http://manoman.sqhill.com

5880-213

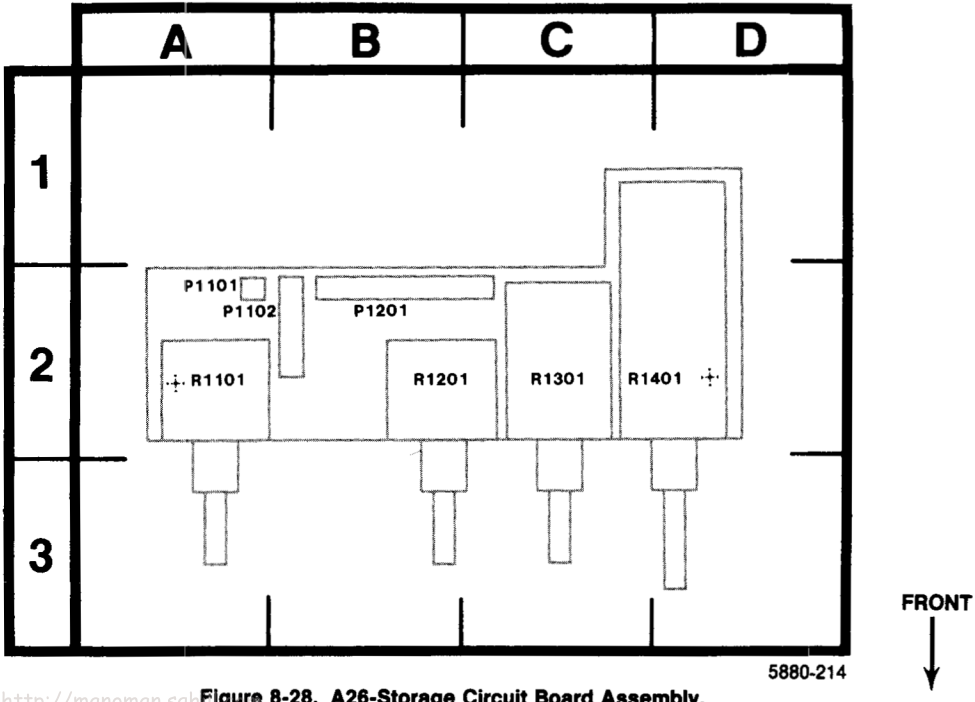

Figure 8-28. A26-Storage Circuit Board Assembly.

http://manoman.sqh.sk/

STORAGE CONTROL AND TRACE ALIGN DIAGRAM 16

ASSEMBLY A26 — Parial Storage Control Circuit Board

CIRCUIT NUMBER	SCHEM LOCATION	BOARD LOCATION	CIRCUIT NUMBER	SCHEM LOCATION	BOARD LOCATION	CIRCUIT NUMBER	SCHEM LOCATION	BOARD LOCATION
R1101	E5	A2	S1301	F2	C2			
R1201	E5	B2	S1301	F5	C2			
R1301	F2	C2	S1401A	D5	D2			
R1301	F5	C2	S1401B	D5	D2			
R1401	C4	D2						

CHASSIS MOUNTED PARTS (not pictured)

CIRCUIT NUMBER	SCHEM LOCATION	BOARD LOCATION	CIRCUIT NUMBER	SCHEM LOCATION	BOARD LOCATION	CIRCUIT NUMBER	SCHEM LOCATION	BOARD LOCATION
DS2558	B3	Chassis	J2513	D5	Chassis	R2465	A3	Chassis
DS2624	C4	Chassis	J2583	B5	Chassis			
			J2625	C5	Chassis			

ASSEMBLY A24 — Storage Mode Switch Circuit Board

CIRCUIT NUMBER	SCHEM LOCATION	BOARD LOCATION	CIRCUIT NUMBER	SCHEM LOCATION	BOARD LOCATION	CIRCUIT NUMBER	SCHEM LOCATION	BOARD LOCATION
CR2454	B5	D1	Q2468	A1	C4	R2470	B2	D2
CR2455	B5	D1	Q2469	A1	D4	R2471	B2	C3
CR2471	B2	C2	Q2478	A1	D4	R2472	B2	C3
CR2472	B2	C2	Q2479	B1	C4	R2473	B2	C2
			R2451	A4	D1	R2474	B2	C2
P2404	A4	D2	R2452	A5	D2	R2475	B2	D3
P2404	B3	D2	R2454	B5	C1	R2476	B2	C3
P2415	A3	D4	R2466	A2	C2	R2478	A2	C4
P2426	A1	D3	R2467	A2	D3			
P2443	B1	D4	R2468	A2	D3	S2404	B5	B2
						U2468A	A2	C4
						U2468B	B2	C4

ASSEMBLY A25 — Partial Storage Circuit Board

CIRCUIT NUMBER	SCHEM LOCATION	BOARD LOCATION	CIRCUIT NUMBER	SCHEM LOCATION	BOARD LOCATION	CIRCUIT NUMBER	SCHEM LOCATION	BOARD LOCATION
C2507	E4	C1	Q2588	B4	C4	R2632	C4	E4
C2521	D4	C2	Q2612	F2	C2	R2634	C3	K4
C2523	D4	D2	Q2626	C4	C4	R2641	A4	D5
C2528	D4	C3	Q2632	C4	C4	R2642	A4	D5
C2534	D3	D2	Q2642	A4	D5	R2643	B4	H4
C2542	D3	E3	Q2644	B4	H4	R2644	B4	J3
C2562	D3	E3	Q2654	G4	B5	R2646	B4	J3
C2565	E2	F3	Q2658	G3	B5	R2651	G4	C5
C2577	E3	D2	Q2664	G3	B5	R2652	G4	B5
C2592	B4	E5	Q2668	G3	B5	R2653	G4	C5
C2594	B3	E4	Q2674	G3	B5	R2654	G4	B5
C2608	C2	D4	Q2678	F3	E5	R2655	G4	C5
C2626	C4	C4	Q2686	D1	B5	R2656	G4	C5
C2662	G3	C5	Q2688	D1	B5	R2657	G4	D5
C2663	G3	C6	Q2694	G2	G4	R2658	G3	C5
C2668	G3	B5	Q2772	F4	E1	R2662	G4	C5
C2671	G4	B5	Q2774	F4	E1	R2663	H3	C5
C2676	F3	E5	Q2784	E4	G1	R2664	G3	B4
C2683	G2	C5	Q2788	F4	G1	R2668	G3	A5
C2684	G2	G5				R2671	G4	B5
C2685	G1	G5	R2464	A2	D3	R2672	G3	B5
C2686	C1	C5	R2501	E4	B3	R2673	G3	B4
C2696	H1	F4	R2502	E4	B1	R2674	G3	E6
C2770	F4	F2	R2506	E4	C1	R2675	G2	G5
C2774	F4	E1	R2507	E4	C1	R2676	F4	B4
			R2508	E4	C1	R2678	F3	F5
CR2514	D5	D3	R2509	D5	A3	R2680	G1	G5
CR2515	D5	D3	R2511	E4	B1	R2681	G2	G4
CR2526	D3	D2	R2512	D5	D3	R2682	G2	D5
CR2528	D4	D3	R2513	D5	D3	R2683	G2	E5
CR2535	D4	B2	R2516	D5	C3	R2684	G2	G5
CR2542	D4	D2	R2517	D5	B3	R2685	G1	G5
CR2551	C5	F2	R2518	D5	C3	R2686	C2	C5
CR2552	C5	F2	R2521	D4	D3	R2687	C2	C5
CR2554	C5	F2	R2522	D4	D3	R2688	D2	D5
CR2555	C5	E2	R2523	D4	D3	R2689	D1	B5

CIRCUIT NUMBER	SCHEM LOCATION	BOARD LOCATION	CIRCUIT NUMBER	SCHEM LOCATION	BOARD LOCATION	CIRCUIT NUMBER	SCHEM LOCATION	BOARD LOCATION
CR2564	E2	F2	R2526	D4	E3	R2691	G2	G5
CR2565	E3	H4	R2527	D4	B3	R2692	G2	H5
CR2582	B5	D5	R2528	D4	D3	R2693	H2	H5
CR2610	F2	C2	R2529	D4	D4	R2694	G2	G5
CR2611	F3	B4	R2531	D4	A3	R2696	H1	G4
CR2612	F3	C4	R2532	D4	A2	R2770	F4	F1
CR2613	F3	B4	R2533	D4	A2	R2772	F5	F1
CR2614	F3	B4	R2534	D3	A2	R2774	F4	E1
CR2615	F2	C2	R2535	D4	B1	R2775	F4	D1
CR2626	C5	C4	R2536	D4	B1	R2779	E4	E1
CR2643	B4	H4	R2538	D3	E2	R2782	E4	E1
CR2644	A4	J4	R2539	D3	E2	R2783	E4	E1
CR2646	B4	H4	R2540	D3	E3	R2785	F4	H2
CR2663	H4	C5	R2542	D3	E3	R2786	F4	G1
CR2664	G3	B5	R2556	E1	E1	R2787	F4	G1
CR2686	C2	C5	R2558	B3	B3	R2788	F4	F1
CR2687	C1	C5	R2562	D3	F3	R2789	F4	F1
			R2563	D2	B3			
J2514	D5	C2	R2564	E2	G2	S2558	D4	B2
J2584	B5	D5	R2565	E2	G3	S2624	C5	B4
J2626	C5	C4	R2566	E1	G2			
			R2571	E3	B3	U2552A	E2	E2
P2504	A3	B3	R2572	E3	B1	U2552B	F3	E2
P2504	A4	B3	R2576	E3	F2	U2552C	E2	E2
P2512	B3	A1	R2577	E3	D2	U2556A	E4	D1
P2531	D4	B2	R2578	E3	C2	U2556B	D2	D1
P2572	C4	B2	R2579	E3	D2	U2556C	E2	D1
P2572	D5	B2	R2581	B5	E5	U2556D	E2	D1
P2572	D5	B2	R2582	B5	E5	U2562A	D3	F3
P2572	F2	B2	R2584	B5	B5	U2562B	E2	F3
P2572	F4	B2	R2585	B5	E5	U2565A	E2	D5
P2572	F5	B2	R2586	B4	F5	U2565B	C2	D5
P2587	B5	A5	R2587	C4	E4	U2565C	E2	D5
P2587	C1	A5	R2588	B4	B4	U2565D	C3	D5
P2587	F5	A5	R2593	B2	F1	U2588A	B4	F5
P2587	G3	A5	R2594	B3	E4	U2588B	D2	F5
P2613	C4	A2	R2595	B2	C4	U2588C	B4	F5
P2615	C3	B5	R2604	C3	F5	U2588D	C4	F5
			R2605	C2	B5	U2592A	B3	E5
Q2502	E4	B1	R2606	C3	D4	U2592B	B4	E5
Q2506	E4	C1	R2607	C2	B5	U2592C	C3	E5
Q2508	E4	C1	R2608	C2	D4	U2592D	C3	E5
Q2514	D5	C3	R2609	C3	E4	U2594A	C3	F4
Q2526	D3	D2	R2610	F3	B3	U2594B	H1	F4
Q2528	D4	D2	R2611	F3	C2	U2608A	C2	D4
Q2532	D4	A1	R2612	F3	C2	U2608B	C3	D4
Q2536	D4	A1	R2613	F4	B4	U2608C	B2	D4
Q2538	D3	D2	R2614	F3	B4	U2608D	C2	D4
Q2542	D3	D2	R2615	F2	B4	U2682A	G2	G5
Q2572	E3	B1	R2622	C5	C4	U2682B	C3	G5
Q2576	E3	C2	R2623	C5	C4	U2684A	G3	F5
Q2578	E3	C1	R2624	C5	C4	U2684B	G2	F5
Q2584	B5	E5	R2626	C4	C4			
Q2586	B4	E5	R2631	C4	B3			

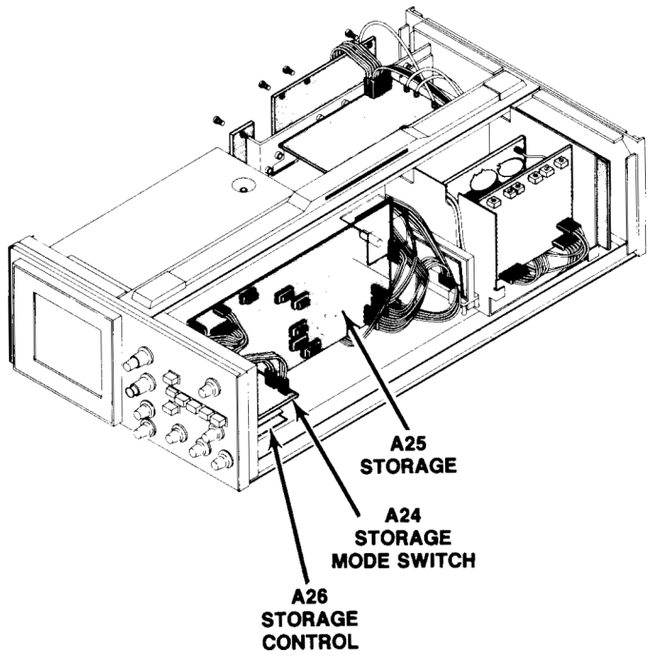

http://manoman.sqhill.com

WAVEFORM CONDITIONS

The waveforms shown were obtained with the 7934 controls set as follows:

Front panel controls (knob type) at midrange; VERTICAL MODE, LEFT; TRIGGER SOURCE, VERT MODE; NON STORE button, in.

Waveform Conditions. The waveforms shown below were obtained using a test oscilloscope system with 10 MΩ input impedance and at least 60 MHz bandwidth (Tektronix 7603 Oscilloscope, 7B53A Time Base, and 7A13 Differential Comparator equipped with a 10X probe. A 7B53A Time Base plug-in unit is installed in the mainframe A HORIZ compartment. The 7B53A is set for internal auto-trigger and 0.5 millisecond/division sweep rate.

1

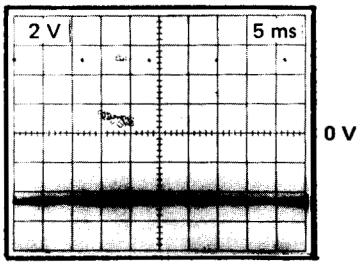

2

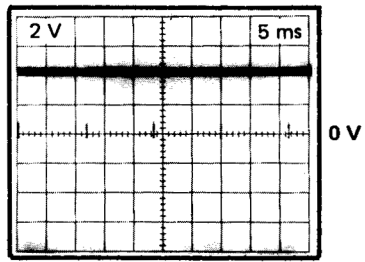

3

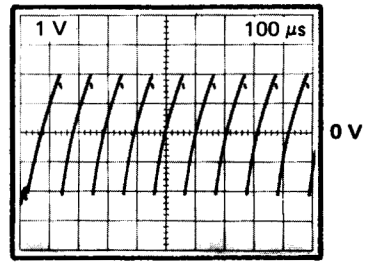

http://manoman.sqhill.com

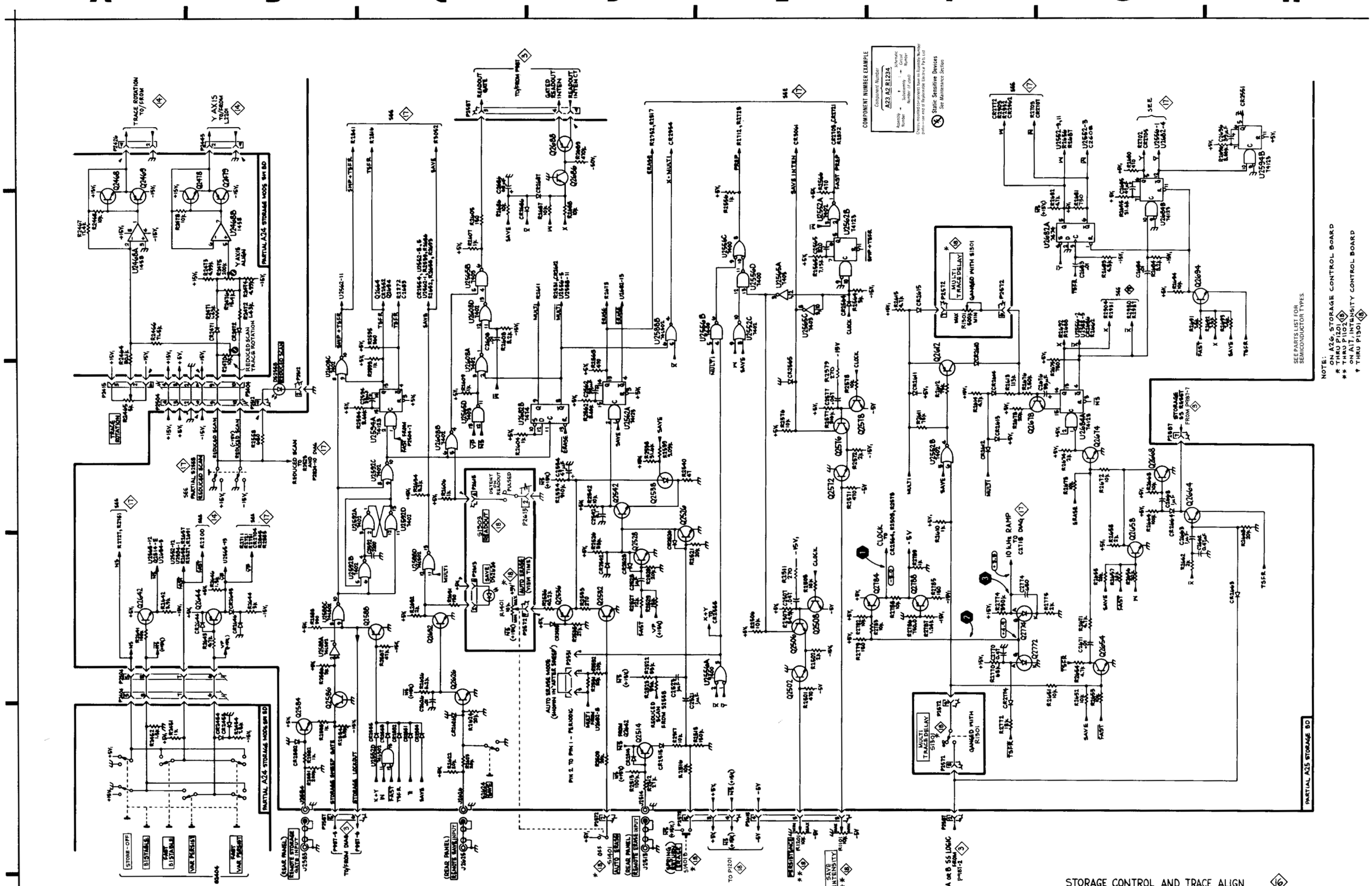

http://manoman.sqhill.com

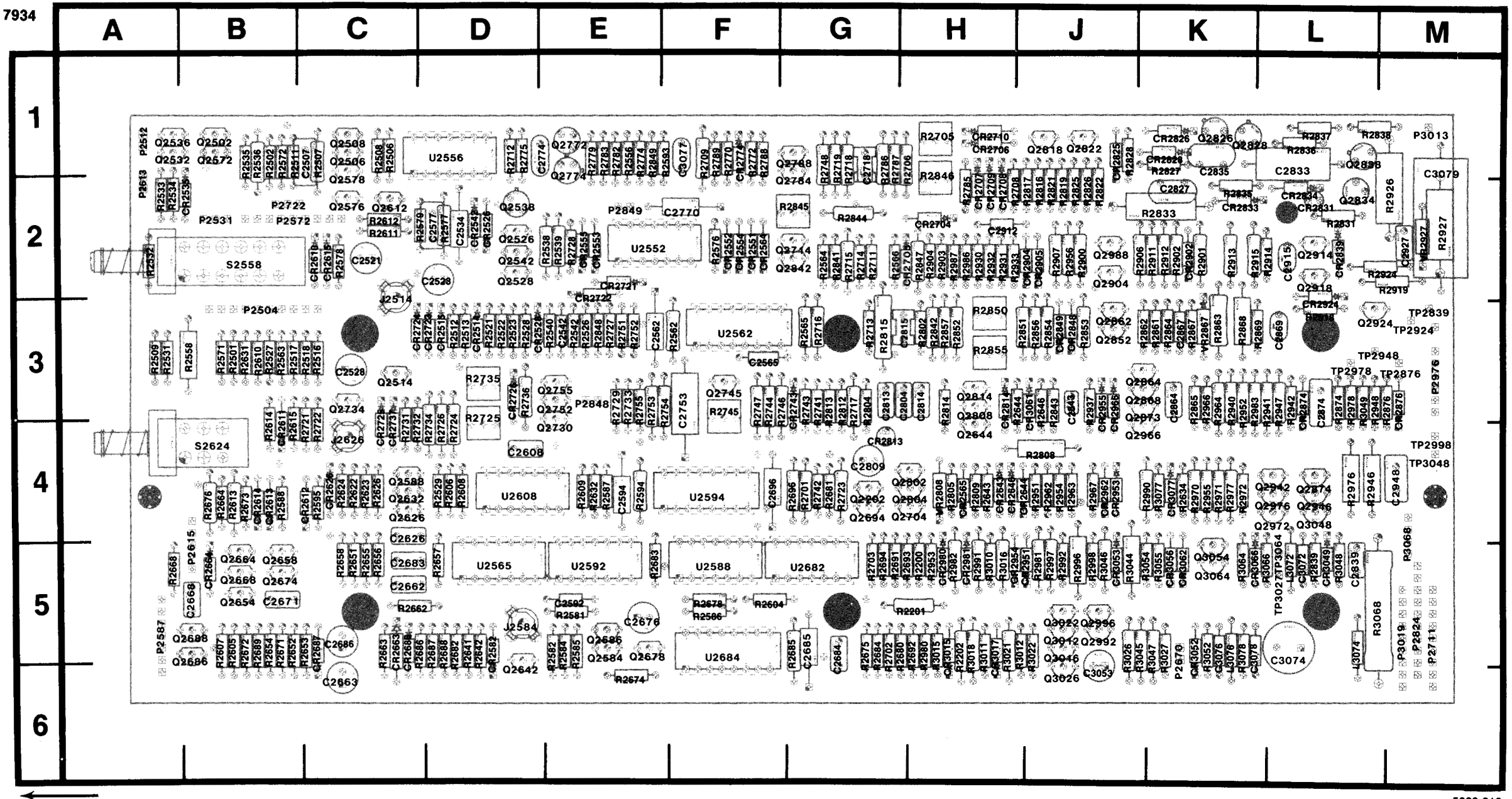
A
B
C
D
E
F
G
H
J
K
L
M
1
2
3
4
5
6
U2556
U2552
U2562
U2608
U2594
U2565
U2592
U2588
U2682
U2684
S2558
S2624
P2504
P2531
P2572
P2722
P2849
P2848
P2587
P2615
P2824
P2711
P2679
P3019
P3068
P3013
P2976
P2839
P2924
P2948
P2876
P2998
P3048
P2824
P2711
TP2839
TP2924
TP2948
TP2978
TP2876
TP2998
TP3048
TP3064
TP3072
C3079
C3074
C3053
C2833
C2835
C2827
C2912
C2770
C2521
C2528
C2514
C2565
C2608
C2753
C2809
C2813
C2626
C2683
C2662
C2676
C2685
C2686
C2663
C2642
C2584
C2678
C2839
C2915
C2869
C2874
C2927
C2948
C2946
C2671
C2654
C2668
C2664
C2658
C2674
C2666
C2688
C2686
C2687
C2685
C2684
C2674
C2678
C2642
C2583
C2582
C2584
C2585
C2581
C2592
C2676
C2686
C2584
C2642
C2663
C2687
C2688
C2689
C2672
C2671
C2653
C2652
C2654
C2689
C2688
C2687
C2686
C2663
C2662
C2683
C2626
C2608
C2528
C2521
C2514
C2734
C2755
C2752
C2730
C2745
C2753
C2565
C2562
C2722
C2721
C2772
C2774
C2768
C2784
C2844
C2845
C2704
C2706
C2710
C2618
C2822
C2826
C2828
C2836
C2838
C2834
C2831
C2833
C2835
C2827
C2912
C2914
C2918
C2924
C2919
C2839
C2915
C2869
C2874
C2927
C2948
C2946
C2976
C2972
C2874
C2946
C2948
C2976
C2972
C3048
C3064
C3072
C3066
C3048
C2839
C3068
C3074
C3053
C3026
C3046
C3012
C3022
C3017
C3021
C3012
C3022

ASSEMBLY A25 — Partial Storage Circuit Board

CIRCUIT NUMBER	SCHEM LOCATION	BOARD LOCATION	CIRCUIT NUMBER	SCHEM LOCATION	BOARD LOCATION	CIRCUIT NUMBER	SCHEM LOCATION	BOARD LOCATION
C2718	B2	G1	Q2842	C3	G2	R2855	D3	H3
C2753	B5	F3	Q2852	D3	J3	R2856	D3	J3
C2804	D2	F2	Q2862	E3	J3	R2857	D3	H3
C2809	D2	H3	Q2864	E3	K3	R2861	E3	K3
C2813	D2	G3	Q2868	E3	K3	R2862	E3	K3
C2814	D2	H3	Q2873	E3	K3	R2863	F2	K3
C2815	D1	H3	Q2874	F3	L4	R2864	E3	K3
C2827	F1	K2	Q2904	C4	J2	R2865	E3	K3
C2833	F1	L1	Q2914	E3	L2	R2867	E3	K3
C2835	F1	K1	Q2918	F3	L2	R2868	E2	K3
C2839	E1	L5	Q2924	F3	L3	R2869	E2	L3
C2843	C3	J3	Q2942	E4	L4	R2874	F3	L3
C2864	E3	K3	Q2946	E4	L4	R2876	F3	M3
C2867	E3	K3	Q2966	C4	K4	R2900	C3	J2
C2869	E2	L3	Q2972	E4	L4	R2901	D3	K2
C2874	F3	L3	Q2976	E4	L4	R2902	D3	K2
C2912	E3	H2	Q2988	D4	J2	R2903	C3	H2
C2915	F3	L2	Q2992	F4	J5	R2904	C4	H2
C2927	F3	M2	Q2996	F4	J5	R2906	C3	K2
C2948	F4	M4	Q3012	C5	J5	R2907	D3	J2
C3053	F5	J6	Q3016	C5	J5	R2911	D3	K2
C3072	G1	L5	Q3022	F5	J5	R2912	D3	K2
C3074	G1	L5	Q3026	F5	J6	R2913	E4	K2
C3076	G1	K5	Q3048	G4	L4	R2914	E3	L2
C3077	G2	F1	Q3054	F5	K5	R2915	E4	K2
C3078	G2	K5	Q3064	F5	K5	R2918	F3	L3
C3079	G1	M2				R2919	F3	M2
			R2701	A2	G4	R2924	F3	M2
CR2704	C2	H2	R2702	A2	G5	R2926	F3	M2
CR2705	C3	H2	R2703	A2	G5	R2927	F3	M2
CR2706	C3	H1	R2705	C3	H1	R2930	C3	H2
CR2707	C3	H2	R2706	B3	H1	R2931	C3	H2
CR2708	C3	H2	R2708	C3	H2	R2932	C3	H2
CR2709	B3	H2	R2709	B3	F1	R2933	C3	H2
CR2710	C3	H1	R2711	A2	G2	R2937	D4	J3
CR2721	A2	E2	R2712	A2	D1	R2940	D4	K3
CR2722	B2	E2	R2713	B2	G3	R2941	D4	L3
CR2723	B2	D3	R2714	B2	G2	R2942	E4	L3
CR2724	B3	C3	R2715	B2	G2	R2946	E3	L4
CR2725	B3	C4	R2716	B2	G3	R2947	E3	L3
CR2726	B3	D3	R2717	B2	G3	R2948	E4	L3
CR2737	B4	C4	R2718	B1	G1	R2951	C4	J4
CR2743	B4	G3	R2719	B1	G1	R2952	C4	K3
CR2813	D2	G4	R2721	A3	C4	R2953	C4	H5
CR2814	D2	H3	R2722	A3	C4	R2954	C4	J4
CR2825	F2	J1	R2723	B2	G4	R2955	C4	K4
CR2826	F2	K1	R2724	B3	D4	R2956	D4	J2
CR2828	F1	K1	R2725	B3	D3	R2962	C4	J4
CR2831	F1	L2	R2726	B3	D4	R2963	C4	J4
CR2833	F1	K2	R2727	A3	E3	R2964	D4	K3
CR2834	F1	L2	R2728	A4	E2	R2966	C4	K3
CR2839	F2	L2	R2729	B4	E3	R2967	C4	J4
CR2848	D3	J3	R2731	A4	C4	R2970	D4	K4
CR2849	D3	J3	R2732	B4	C4	R2971	E4	K4
CR2874	F3	L3	R2733	A5	E3	R2972	E4	K4
CR2876	F3	M3	R2734	B4	D4	R2976	E4	L4
CR2902	D3	K2	R2735	B4	D3	R2977	E4	K4
CR2904	C3	J2	R2736	B4	D3	R2978	E4	L3
CR2905	D3	J2	R2741	B4	G3	R2980	C4	H5
CR2924	F3	L3	R2742	B4	G4	R2981	C4	J5
CR2951	C4	J5	R2743	B5	G3	R2982	D4	H5
CR2953	C4	J4	R2744	B5	F3	R2983	C4	K3
CR2954	C4	H5	R2745	B5	F3	R2986	D4	H2
CR2955	C4	J3	R2746	B5	G3	R2987	D4	H2
CR2962	C4	J4	R2747	B5	F3	R2990	D4	K4
CR2966	C4	J3	R2748	C2	E3	R2991	F4	H5
CR2980	C4	H5	R2751	A5	E3	R2992	F4	J5
CR2981	D4	H5	R2752	A5	E3	R2996	F4	J5
CR3015	C5	H5	R2753	B5	E3	R2997	F4	J5
CR3017	D5	H5	R2754	B5	F3	R2998	F4	J5
CR3049	G4	L5	R2755	B5	F3	R3010	C5	H5
CR3052	F5	K5	R2802	C2	H3	R3011	C5	H5
CR3053	F5	J3	R2804	D2	G3	R3012	C5	J5
CR3056	E5	K5	R2805	D2	H4	R3015	C5	H5
CR3061	E5	J3	R2808	D2	J4	R3016	C5	H5
CR3062	F5	J3	R2809	D2	H4	R3018	D5	H5
CR3066	G5	K5	R2812	D2	G3	R3021	F5	H5
CR3077	G2	K4	R2813	E2	G3	R3022	F5	J5
			R2814	D2	H3	R3026	F4	J5

CIRCUIT NUMBER	SCHEM LOCATION	BOARD LOCATION	CIRCUIT NUMBER	SCHEM LOCATION	BOARD LOCATION	CIRCUIT NUMBER	SCHEM LOCATION	BOARD LOCATION
L3072	G1	L5	R2815	D2	G3	R3027	F4	K5
L3074	G1	L5	R2816	E2	J2	R3044	F4	J5
L3076	G1	K5	R2817	E2	J2	R3045	F4	J5
			R2821	E2	J2	R3046	F4	J5
P2670	E1	K5	R2822	F2	J2	R3047	F4	K5
P2711	C1	M5	R2825	F2	J2	R3048	G4	L5
P2722	C1	B2	R2826	F2	J2	R3049	G4	L3
P2824	D1	M5	R2827	F1	K1	R3052	F5	K5
P2848	B2	E3	R2828	F1	J1	R3054	F5	K5
P2849	C2	E2	R2831	F1	L2	R3055	F5	K5
P2976	G2	M3	R2833	F1	K2	R3064	F5	K5
P3013	G1	M1	R2835	F1	K2	R3066	G5	L5
P3019	G1	M5	R2836	F1	L1	R3068	G5	L5
P3068	G5	M4	R2837	F1	L1	R3077	G2	K4
			R2838	F1	L1	R3078	G2	K5
Q2704	A2	H4	R2839	E1	L5			
Q2714	B2	G2	R2841	A3	G2	S2558	D1	B2
Q2730	B4	E4	R2842	C3	H3			
Q2734	B4	C3	R2843	C3	J3	TP2839	G2	M3
Q2745	B4	F3	R2844	C3	G2	TP2876	G3	M3
Q2752	B5	E3	R2845	C3	G2	TP2924	G3	M3
Q2755	B5	E3	R2846	C2	H1	TP2948	G4	L3
Q2802	C2	H4	R2847	C2	H2	TP2978	G4	L3
Q2804	C2	H4	R2848	B2	//	TP2998	G4	M4
Q2808	D2	H3	R2849	C2	F1	TP3027	G5	L5
Q2814	D2	H3	R2850	D2	H3	TP3048	G4	M4
Q2818	E2	J1	R2851	D2	J3	TP3064	G5	L5
Q2822	F2	J1	R2852	D2	H3			
Q2826	F2	K1	R2853	D3	J3	VR2808	D2	H4
Q2828	F1	K1	R2854	D3	J3	VR2867	E3	K3
Q2834	F1	L2				VR2927	F3	M2
Q2838	F1	L1						

CHASSIS MOUNTED PARTS (not pictured)

CIRCUIT NUMBER	SCHEM LOCATION	BOARD LOCATION	CIRCUIT NUMBER	SCHEM LOCATION	BOARD LOCATION	CIRCUIT NUMBER	SCHEM LOCATION	BOARD LOCATION
R2720	C1	Chassis	V2200	G2	Chassis			

ASSEMBLY A25 — Partial Storage Circuit Board (not pictured). See Figure 8-26

CIRCUIT NUMBER	SCHEM LOCATION	BOARD LOCATION	CIRCUIT NUMBER	SCHEM LOCATION	BOARD LOCATION	CIRCUIT NUMBER	SCHEM LOCATION	BOARD LOCATION
P2824	C5	M5	R2200	C6	H5			
			R2201	C5	H5			
Q2202	C6	G4	R2202	C5	H5			

CHASSIS MOUNTED PARTS

CIRCUIT NUMBER	SCHEM LOCATION	BOARD LOCATION	CIRCUIT NUMBER	SCHEM LOCATION	BOARD LOCATION	CIRCUIT NUMBER	SCHEM LOCATION	BOARD LOCATION
L2200	G1	Chassis	R2195	E3	Chassis			
L2201	G2	Chassis						
			V2200	G1	Chassis			
P2012	G1	Chassis						

http://manoman.sqhill.com

The following information is provided as an aid in understanding and troubleshooting the **7934** Storage System, refer to Figure 8-29 for test point locations.

Equipment Required:

1. Digital voltmeter (DVM)
2. 100X probe
3. Test Oscilloscope
4. Time-base unit

Control Settings:

READOUT INTENSITY. .OFF (in detent)
AUTO ERASE . . . . . .CCW (in detent, off)
PERSISTENCE. . . . . .CCW (maximum)
HORIZONTAL MODE. . .A
SAVE INTENSITY . . . . .CW
STORAGE LEVEL . . . . .CW
MULTI TRACE DLY. . . .CCW (in detent)

1. CHECK NON-STORE VOLTAGE LEVELS

Use a Digital voltmeter to check dc levels at the following test points:

Storage Mesh . . . . . .–36 V within 3 V
Fast Mesh . . . . . .125 V within 3 V
Collector . . . . . .150 V within 3 V
CE 4 . . . . . 85 V within 3 V
CE 3 . . . . . 70 V within 3 V
CE 2 . . . . . 55 V within 2 V
CE 1 . . . . . 46 V within 2 V
FGA . . . . . 36 V within 2 V
FGK . . . . . 0 V +.3 V –0 V

2. CHECK BISTABLE VOLTAGE LEVELS

Press the BISTABLE and ERASE push button. Use the DVM to check dc levels on the following test points:

Fast Mesh . . . . . .125 V within 4 V
Collector . . . . . .150 V within 4 V
CE 4 . . . . . 85 V within 3 V
CE 3 . . . . . 70 V within 3 V
CE 2 . . . . . 55 V within 2 V
CE 1 . . . . . 46 V within 2 V
FGA . . . . . 36 V within 2 V
FGK . . . . . 0 V +.3 V –0 V

Remove Q2678 on the A25 Storage Board, press ERASE, and check for the following voltages:

Collector . . . . . .115 V within 4 V
CE 4 . . . . . 65 V within 3 V
CE 3 . . . . . 50 V within 2 V
CE 2 . . . . . 40 V within 2 V
CE 1 . . . . . 66 V within 3 V
FGA . . . . . 90 V within 4 V

Replace Q2678

3. CHECK VARIABLE PERSISTENCE VOLTAGE LEVELS

Press VAR PERSIST and ERASE push buttons and check for the following voltages:

Fast Mesh . . . . . .100 V within 3 V
Collector Mesh . . . . . .100 V within 3 V
CE 4 . . . . . 65 V within 3 V
CE 3 . . . . . 44 V within 2 V
CE 2 . . . . . 45 V within 2 V
CE 1 . . . . . 40 V within 2 V
FGA . . . . . 20 V within 1.5 V
FGK . . . . . 0 V +.3 V –0 V

http://manoman.sqhill.com

Replace Q2678 , and press ERASE, and check for the following voltages:

Fast Mesh	125 V within 4 V
Collector Mesh	132 V within 4 V
CE 4	65 V within 3 V
CE 3	75 V within 2 V
CE 2	50 V within 2 V
CE 1	60 V within 3 V
FGA	74 V within 3 V
FGK	0 V +0.3 V-0 V

4. CHECK FAST MODE VOLTAGE LEVELS

Remove all plug-in units from the 7934.

Replace Q2678, press the FAST BISTABLE and ERASE push buttons and check for the following voltages:

Collector	132 V within 4 V
CE 4	65 V within 3 V
CE 3	50 V within 2 V
CE 2	45 V within 2 V
CE 1	40 V within 2 V
FGA	20 V within 1.5 V

Press the FAST VAR PERSIST push button and check for the following voltages:

Front Mesh	–35 V within 3 V
Collector	132 V within 4 V
CE 4	65 V within 3 V
CE 3	60 V within 3 V
CE 2	45 V within 2 V
CE 1	40 V within 2 V
FGA	20 V within 1.5 V

5. CHECK BISTABLE ERASE WAVEFORMS

Connect a 100X probe from the test oscilloscope to the Storage Mesh test point. Adjust the test oscilloscope for a sweep rate of 100 milliseconds/division and a vertical deflection of one volt/division (100 volts/division at probe tip). Press the BISTABLE and ERASE push buttons and check for a 100-millisecond, 600 volt (approximately) erase pulse; see Idealized Erase waveform illustration.

Install a time-base unit in the **7934** A HORIZ compartment. Press the FAST BISTABLE and ERASE push buttons. Set the time-base unit for 1 microsecond/division free-running sweep. Check for 100-millisecond, 600-volt erase and transfer pulses (see Idealized Erase and Transfer waveform illustration).

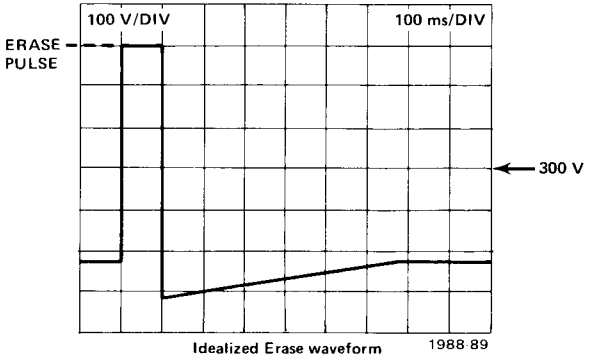

Idealized Erase waveform 1988-89

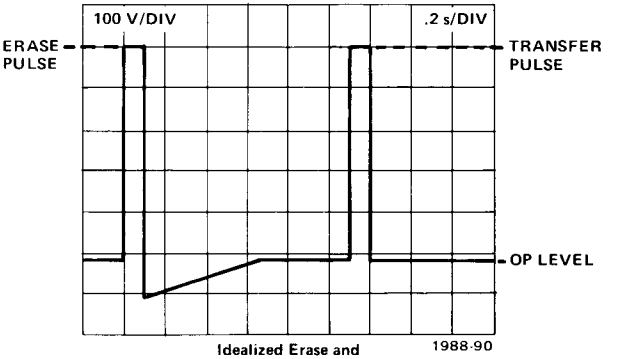

Idealized Erase and Transfer waveform 1988-90

http://manoman.sqhill.com

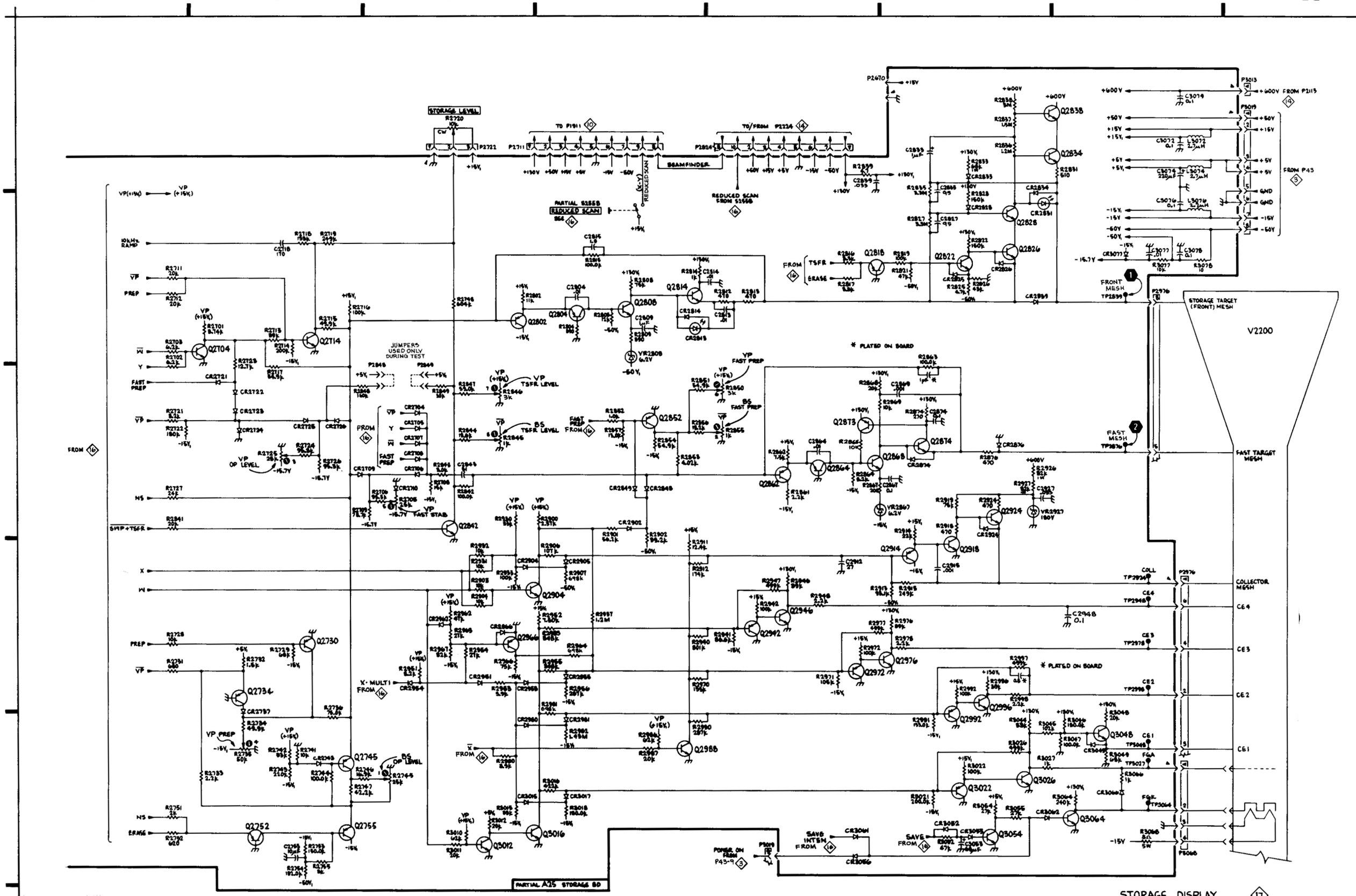

http://manoman.sh.com

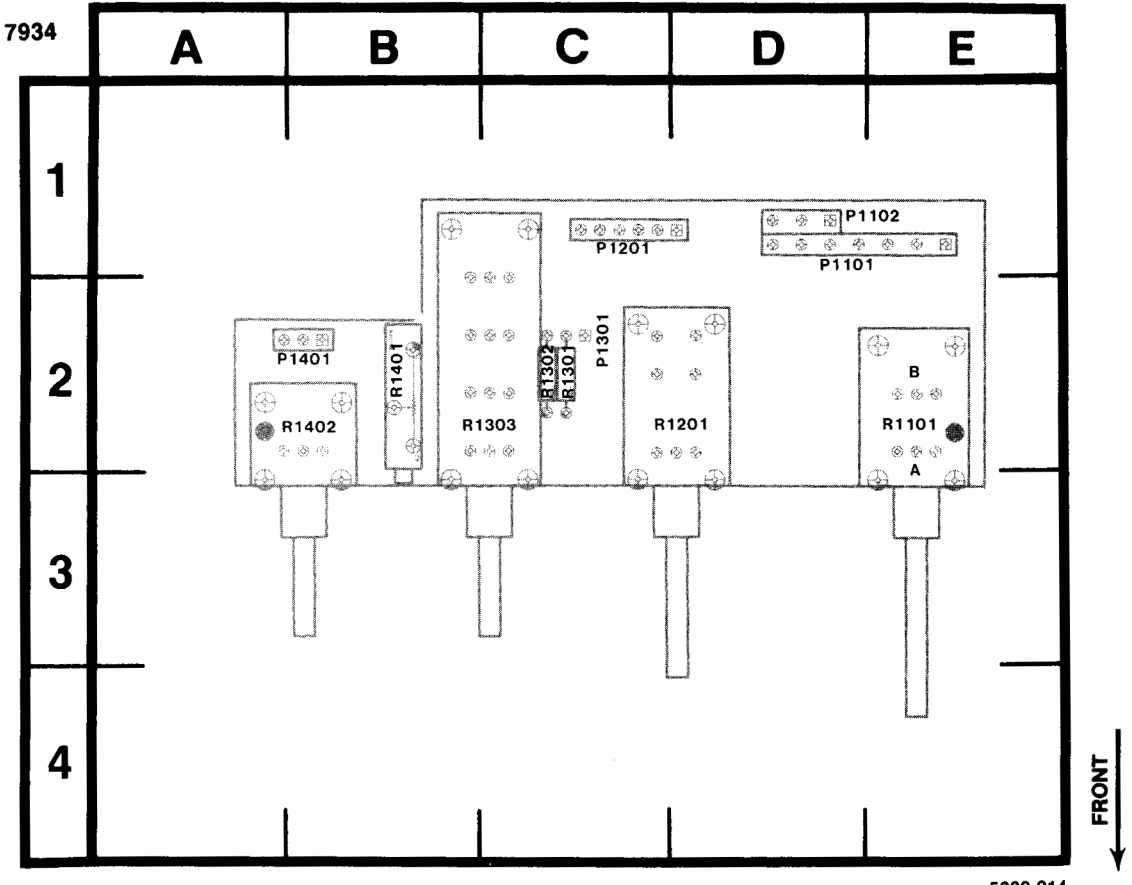

Figure 8-30. A17-Intensity Control Circuit Board Assembly.

http://manoman.sqhill.com

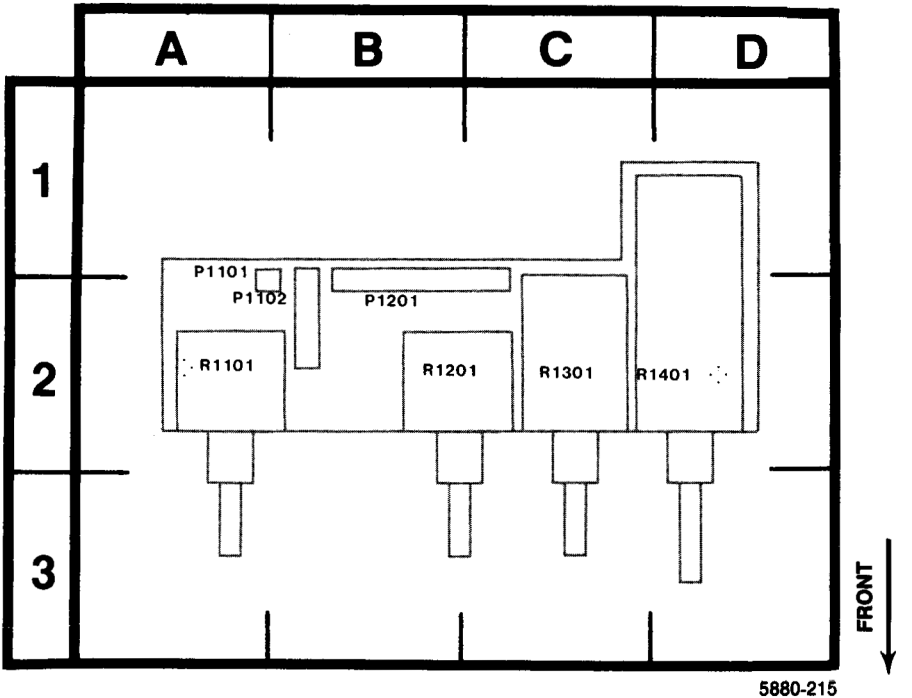

http://manoman.sqhi

Figure 8-31. A26-Storage Control Circuit Board Assembly.

FRONT PANEL CONTROL BOARDS DIAGRAM

ASSEMBLY A17 — Partial Intensity Control Circuit Board

CIRCUIT NUMBER	SCHEM LOCATION	BOARD LOCATION	CIRCUIT NUMBER	SCHEM LOCATION	BOARD LOCATION	CIRCUIT NUMBER	SCHEM LOCATION	BOARD LOCATION
P1101	D3	D1	R1101A	B2	E2	R1303	B1	C2
P1102	B3	D1	R1101B	B4	E2	R1401	B1	B2
P1201	D2	C2	R1201	B3	D2	R1402	B4	B2
P1301	D1	C2	R1301	C1	C2			
P1401	B3	D4	R1302	C2	C2	S1303	C1	C2

ASSEMBLY A26 — Partial Storage Control Circuit Board

CIRCUIT NUMBER	SCHEM LOCATION	BOARD LOCATION	CIRCUIT NUMBER	SCHEM LOCATION	BOARD LOCATION	CIRCUIT NUMBER	SCHEM LOCATION	BOARD LOCATION
P1101	E1	A2	R1101	F4	A2	S1301	F2	C2
P1102	F1	B2	R1201	F4	B2	S1401A	F3	D2
P1102	F4	B2	R1301	F2	C2	S1401B	F2	D2
P1201	F2	B2	R1401	F3	D2			

CHASSIS MOUNTED PARTS (not pictured)

CIRCUIT NUMBER	SCHEM LOCATION	BOARD LOCATION	CIRCUIT NUMBER	SCHEM LOCATION	BOARD LOCATION	CIRCUIT NUMBER	SCHEM LOCATION	BOARD LOCATION
R2195	A3	Chassis						

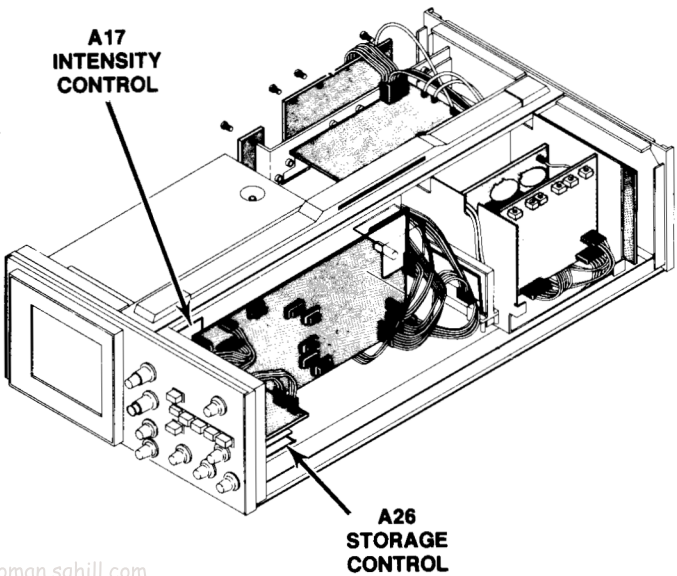

http://manoman.sqhill.com

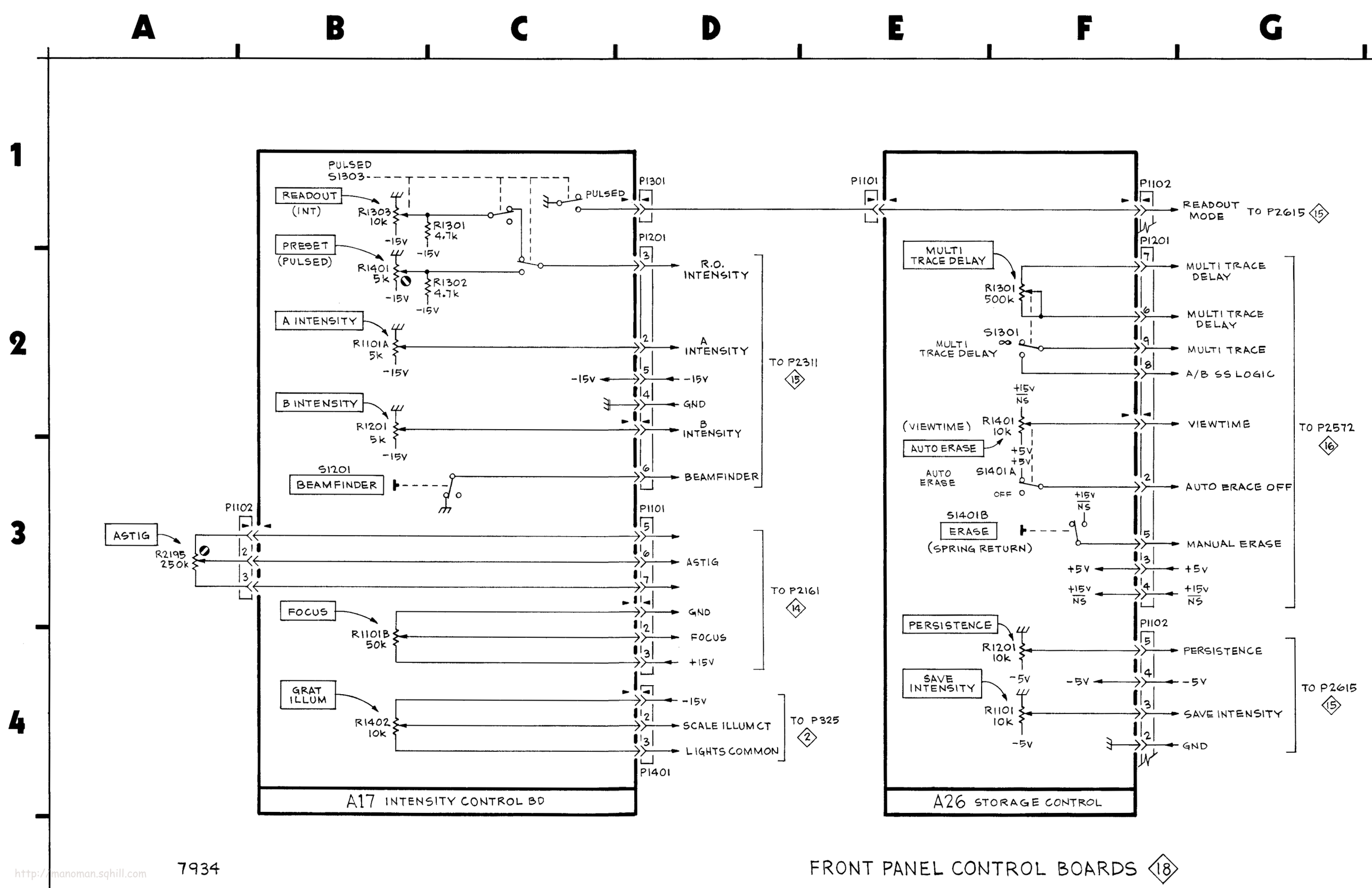

FRONT PANEL CONTROL BOARDS 18

http://manoman.sqhill.com

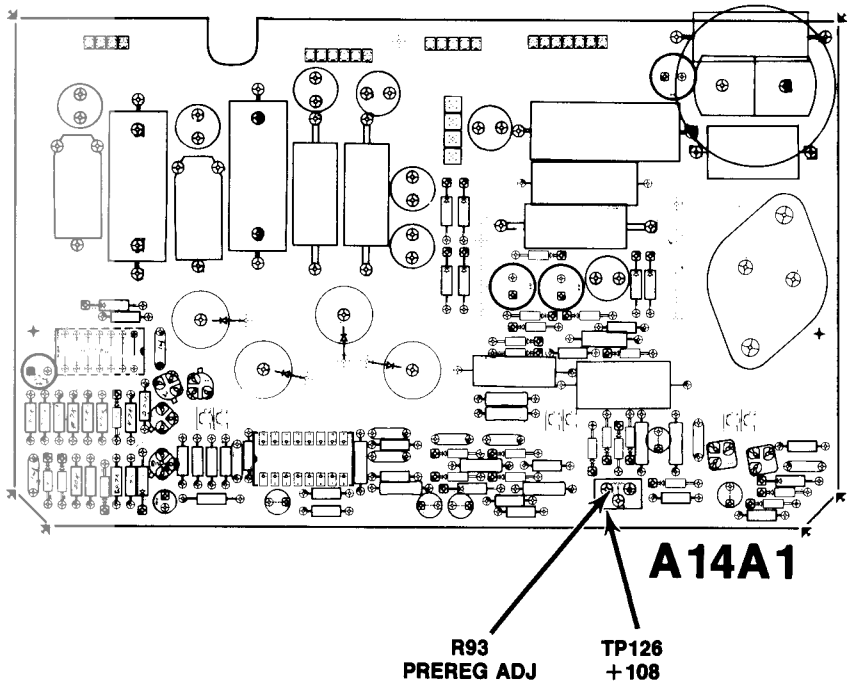

Figure 8-32. Power Supply test points and adjustments on A14A1—Control Rectifier Circuit Board.

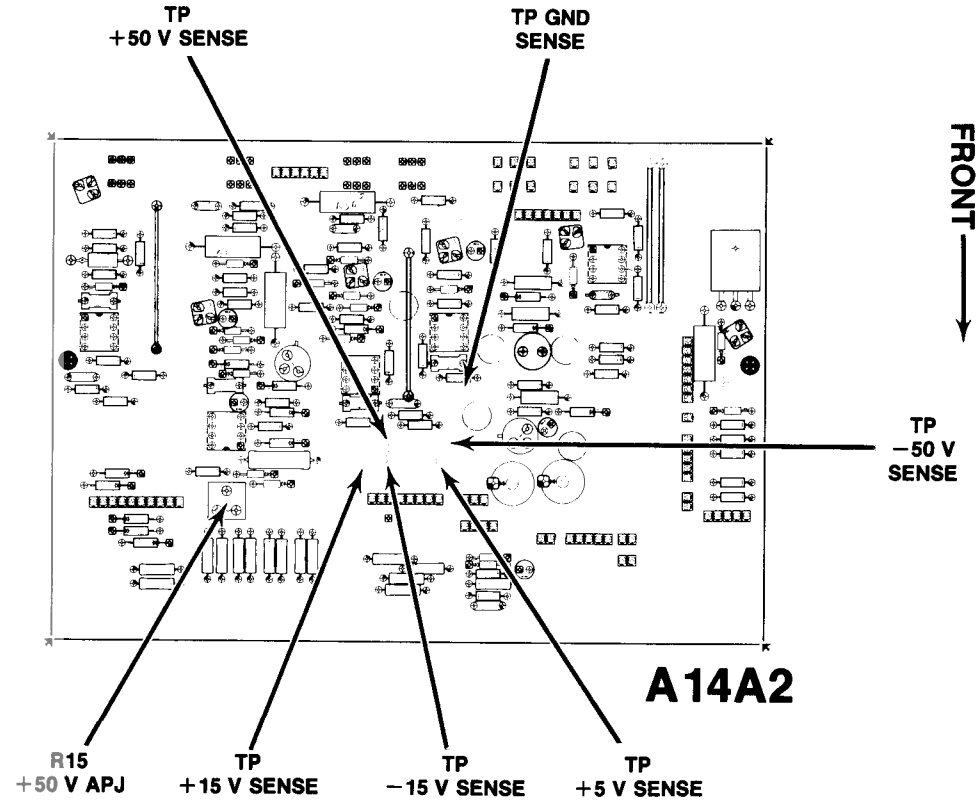

Figure 8-33. Power Supply test points and adjustments on A14A2—LV Regulator Circuit Board.

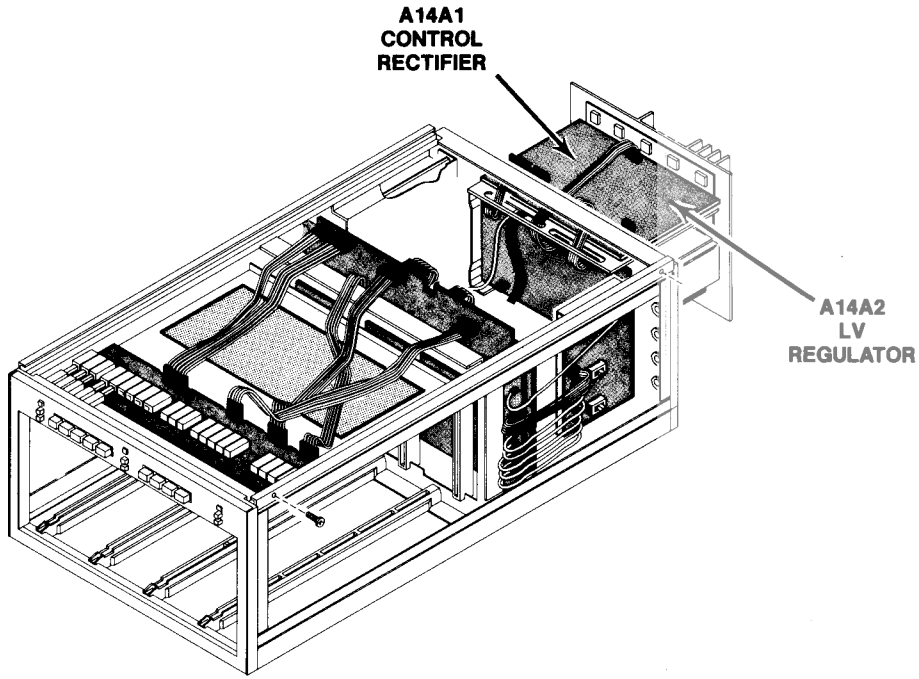

http://manoman.sqhill.com

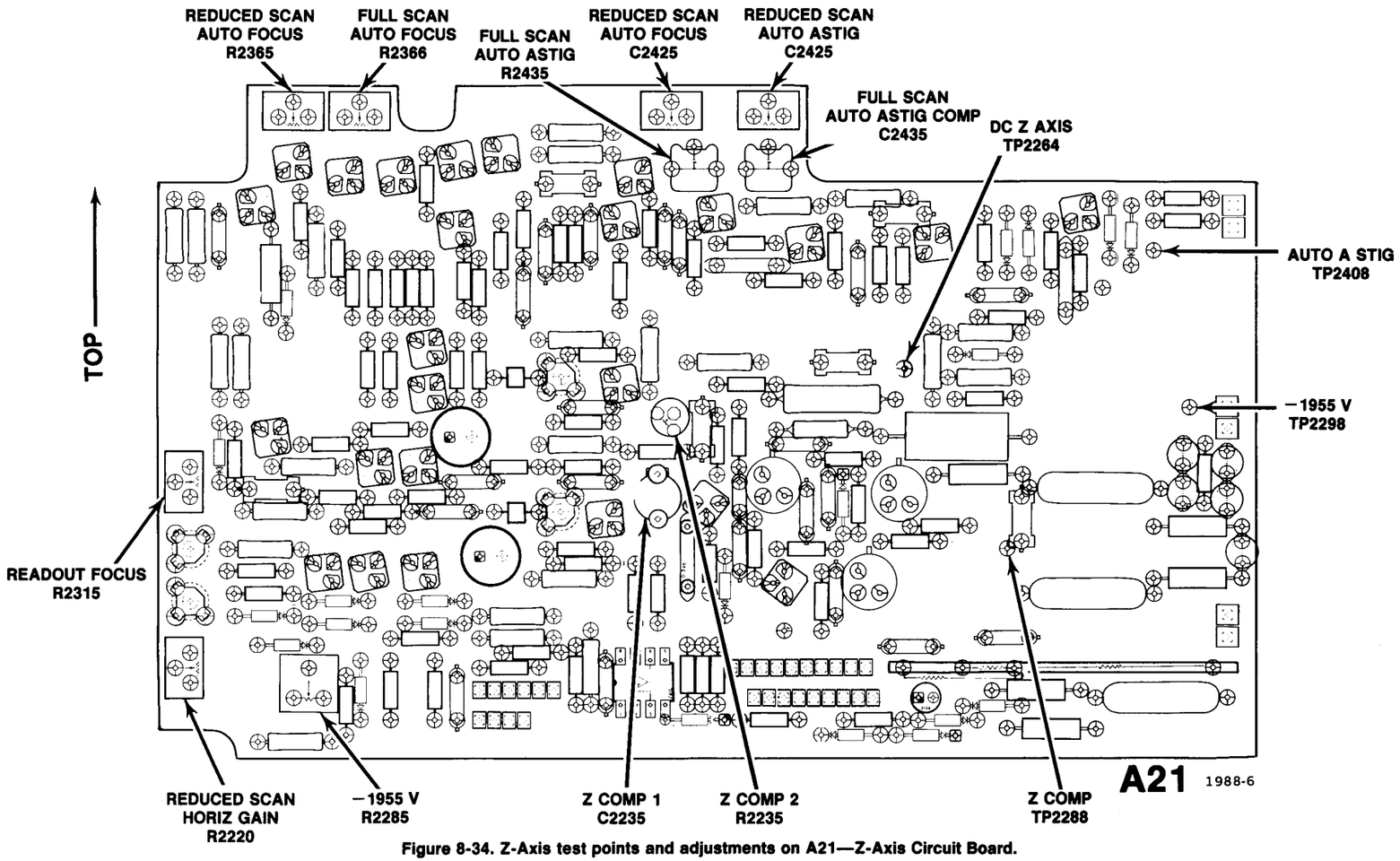

Figure 8-34. Z-Axis test points and adjustments on A21—Z-Axis Circuit Board.

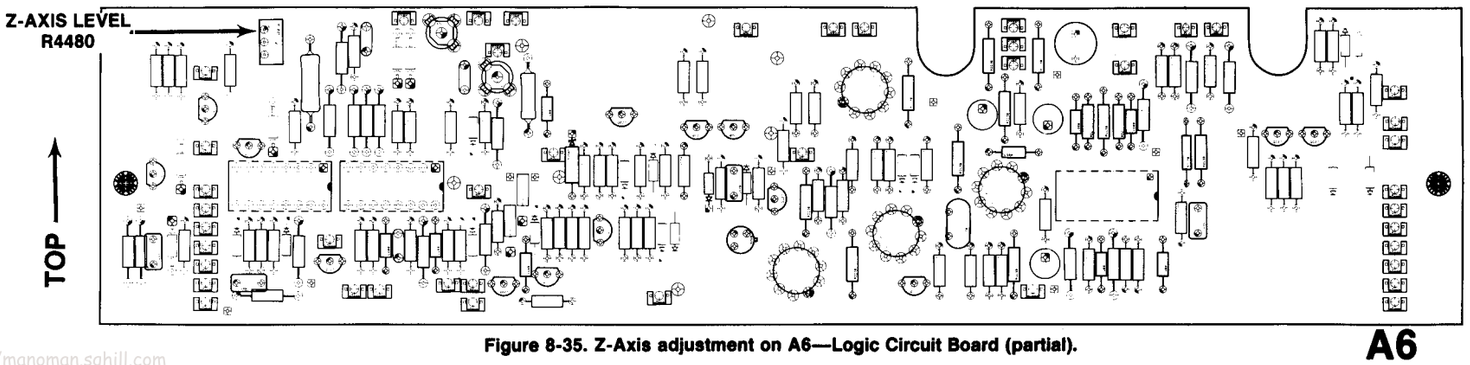

Figure 8-35. Z-Axis adjustment on A6—Logic Circuit Board (partial).

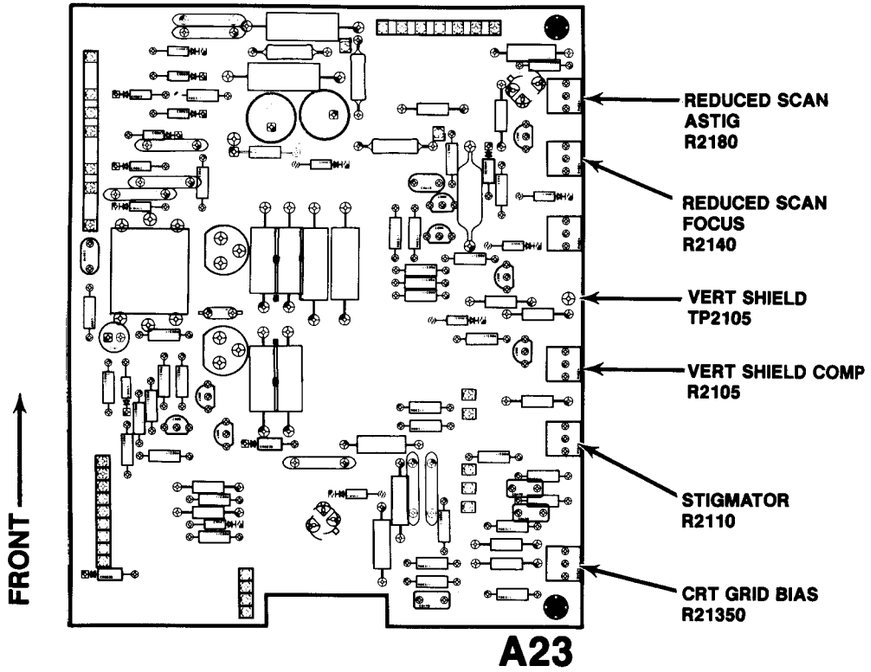

Figure 8-36. CRT test points and adjustments on A23—Focus Circuit Board.

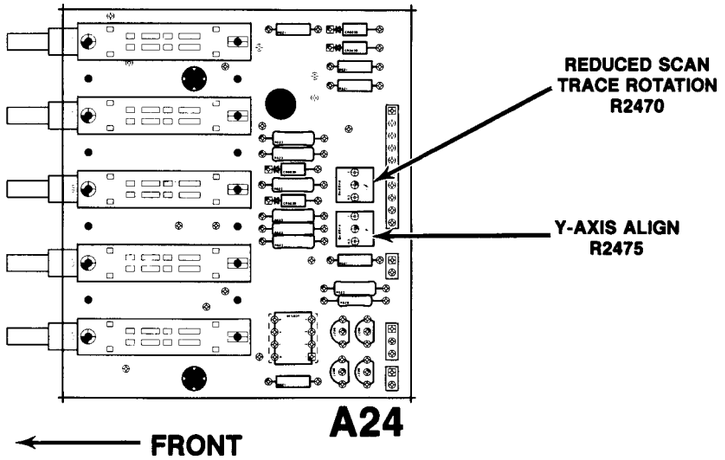

Figure 8-37. CRT adjustments on A24—Storage Mode Switch Circuit Board.

http://manoman.sqhill.com

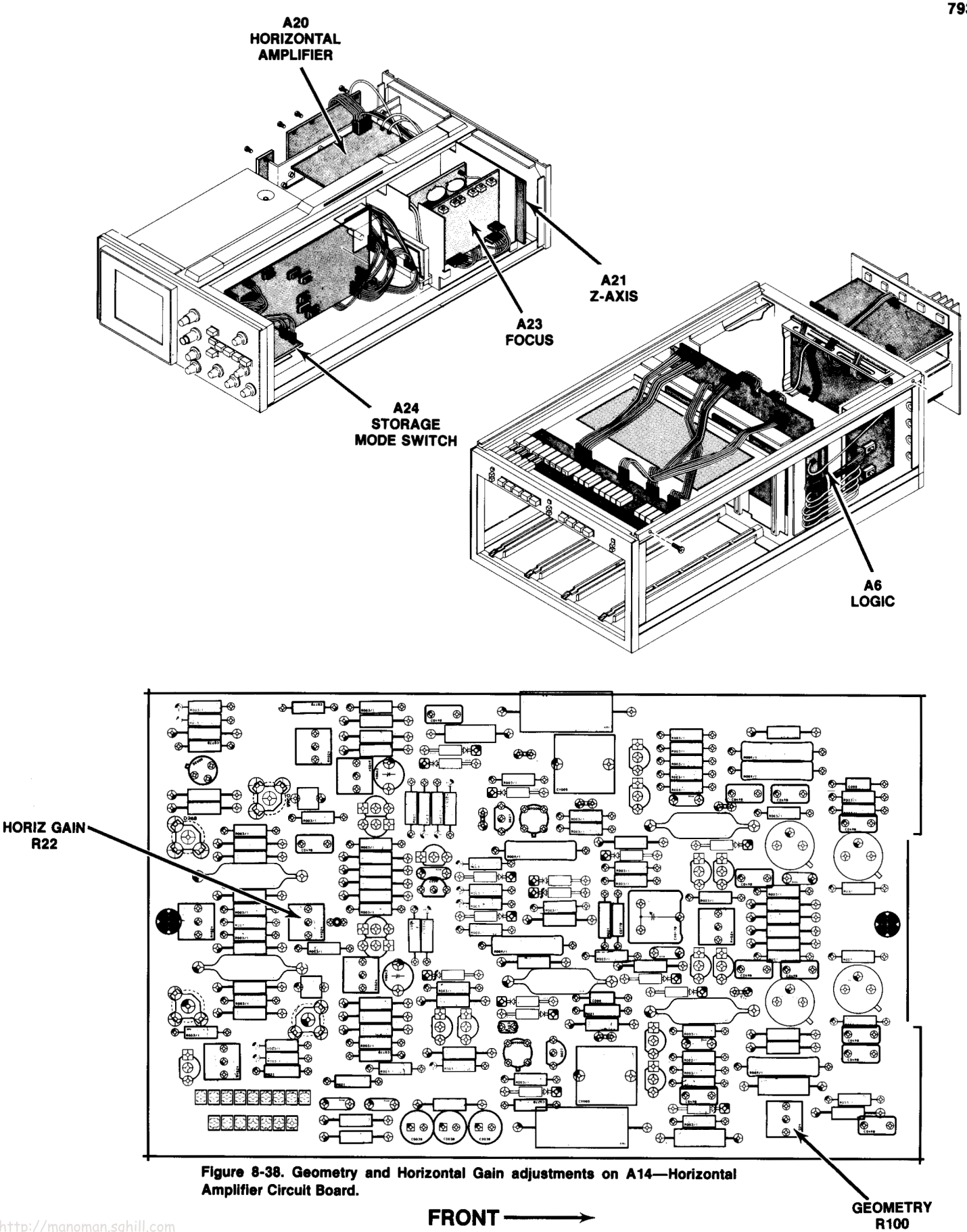

Figure 8-38. Geometry and Horizontal Gain adjustments on A14—Horizontal Amplifier Circuit Board.

http://manoman.sqhill.com

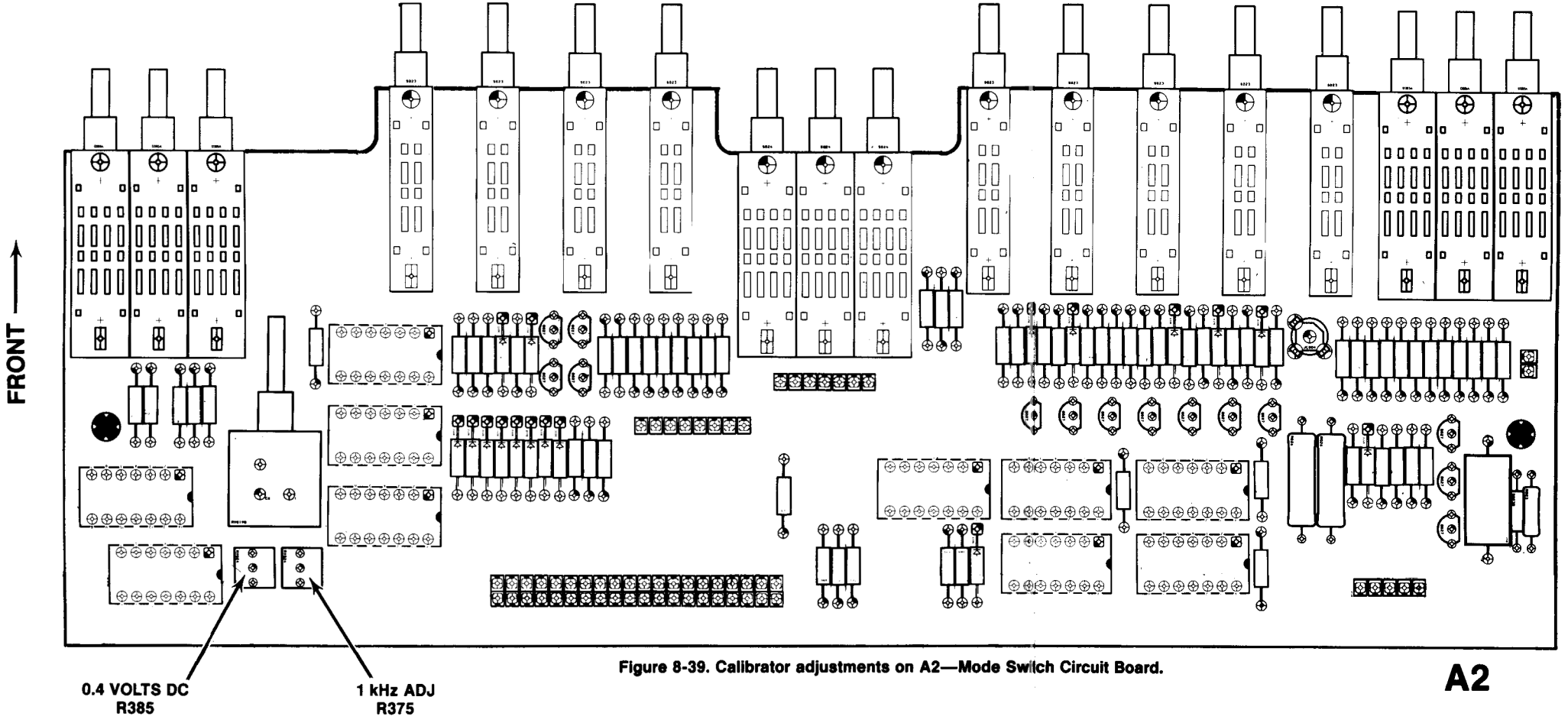

Figure 8-39. Calibrator adjustments on A2—Mode Switch Circuit Board.

http://manoman.sqhill.com

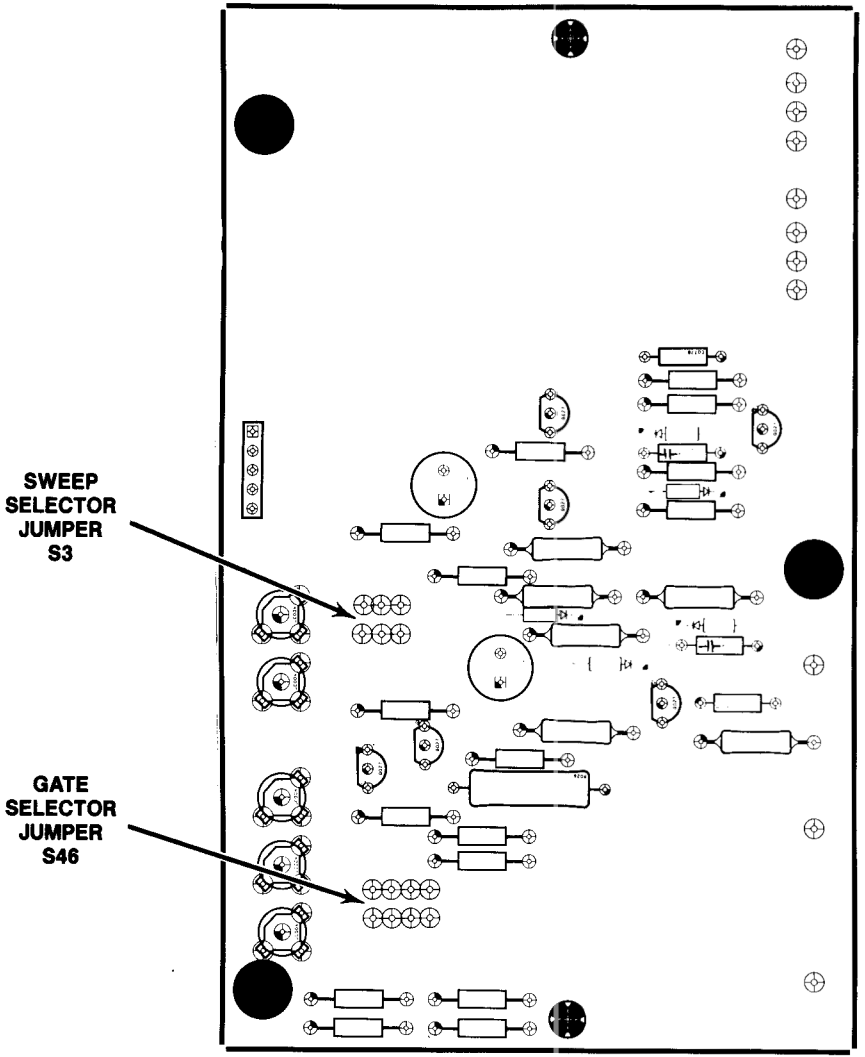

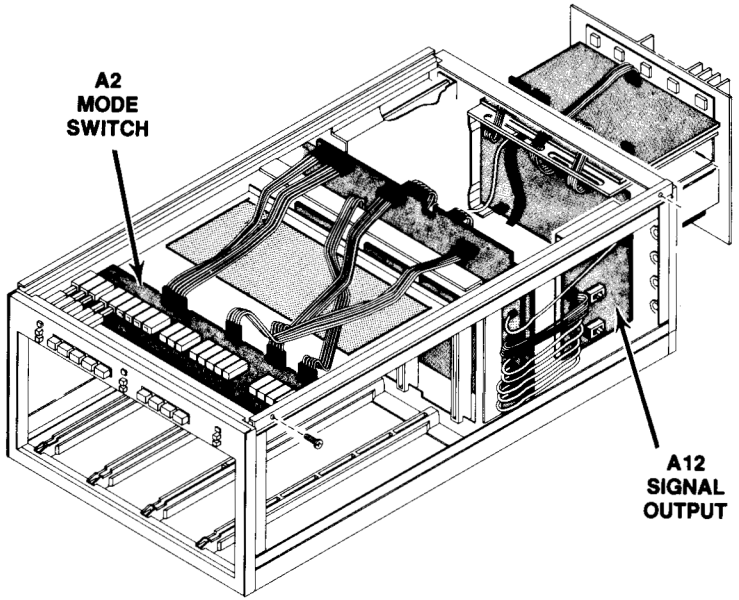

Figure 8-40. Signal out selector jumpers on A12—Signal Output Circuit Board.

← FRONT

http://manoman.sqhill.com

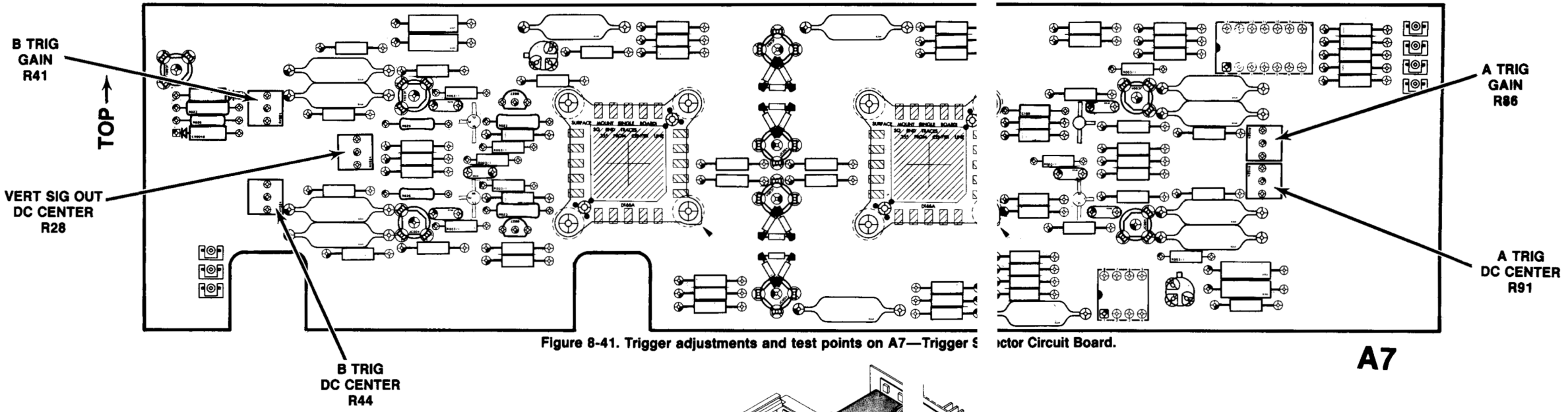

Figure 8-41. Trigger adjustments and test points on A7—Trigger S ctor Circuit Board.

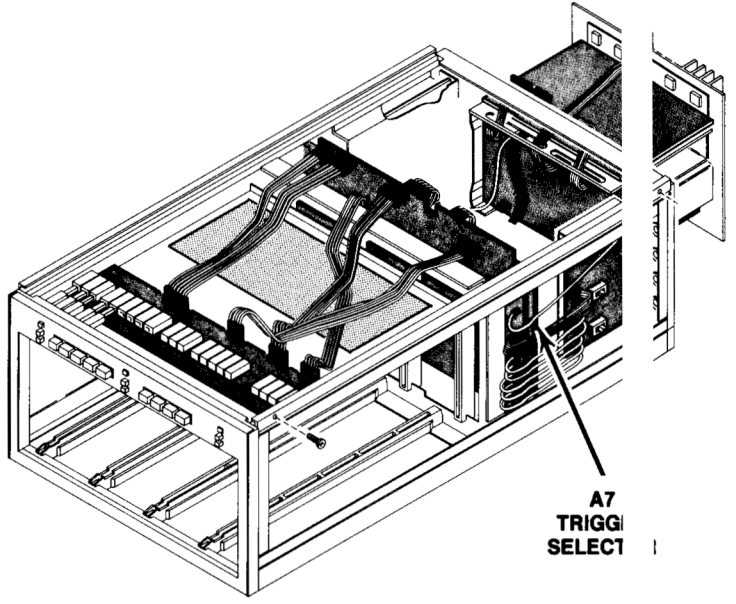

http://manoman.sqhill.com

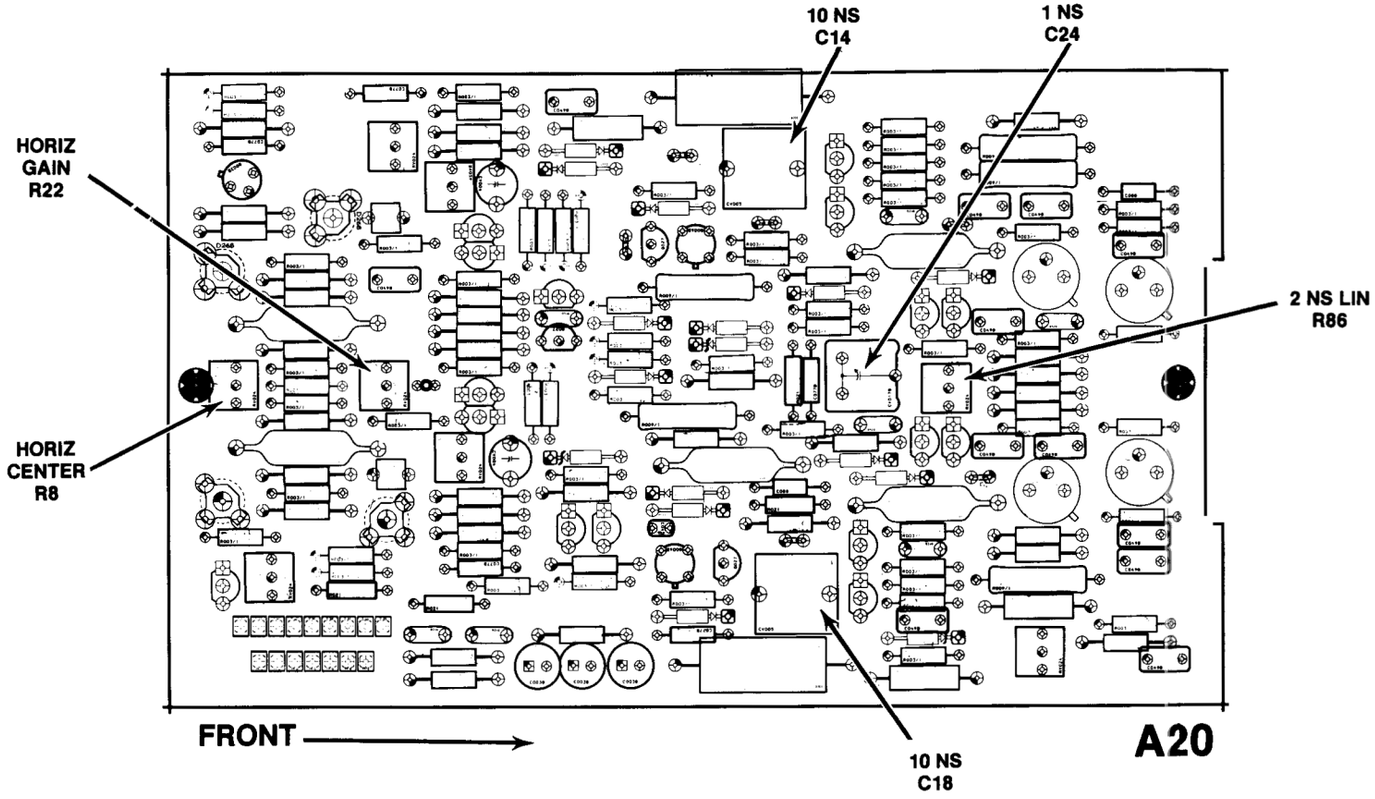

Figure 8-42. Horizontal adjustments and test points on A20—Horizontal Amplifier Circuit Board.

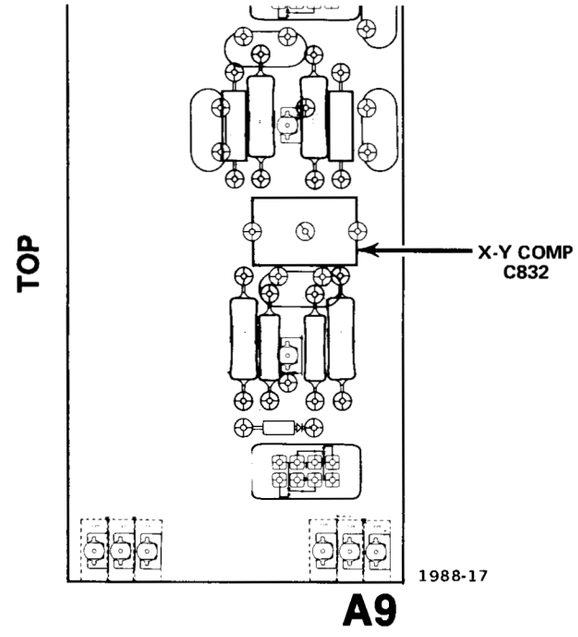

Figure 8-44. X-Y Compensation adjustment on A9 — X-Y Compensation Circuit Board.

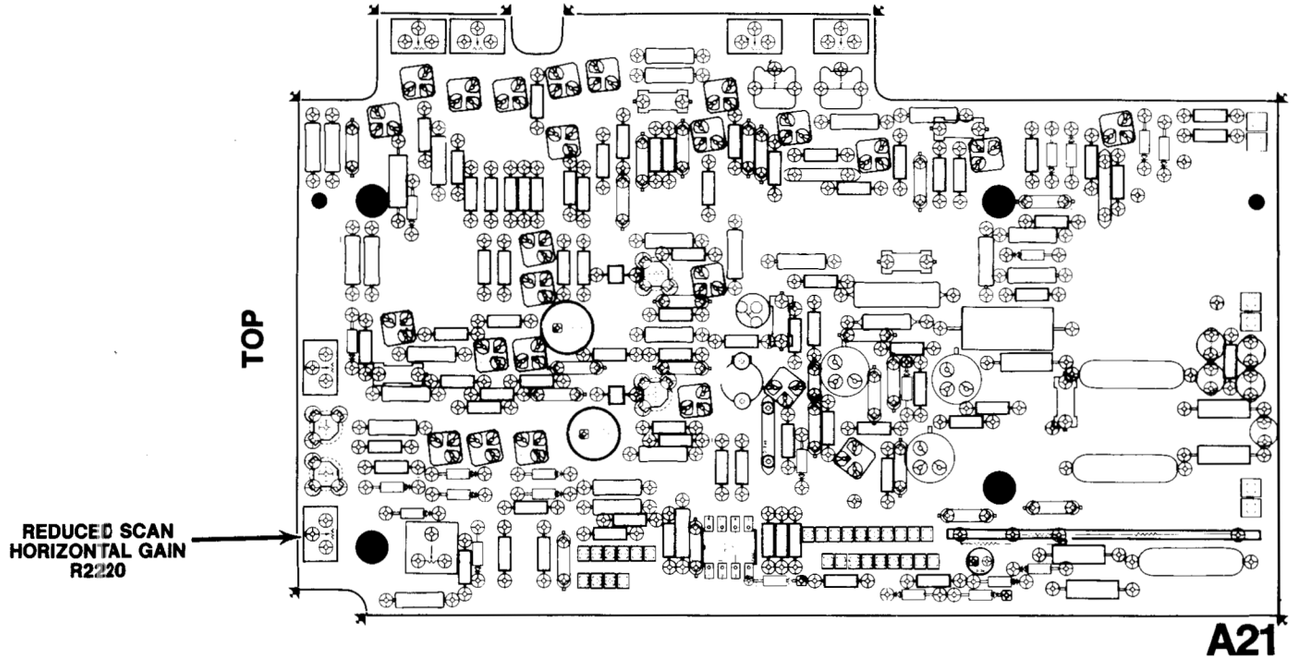

Figure 8-43. Reduced scan horizontal gain adjustment on A21 — Z-Axis Circuit Board.

http://manoman.sqhill.com

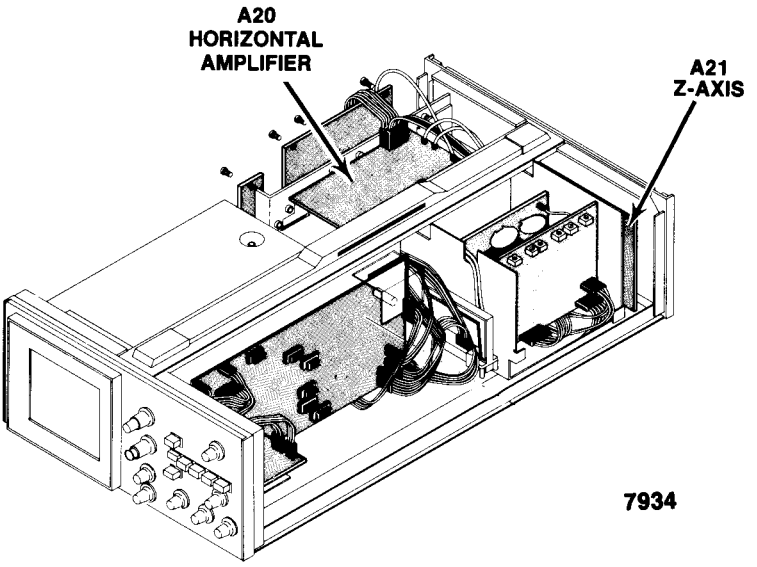

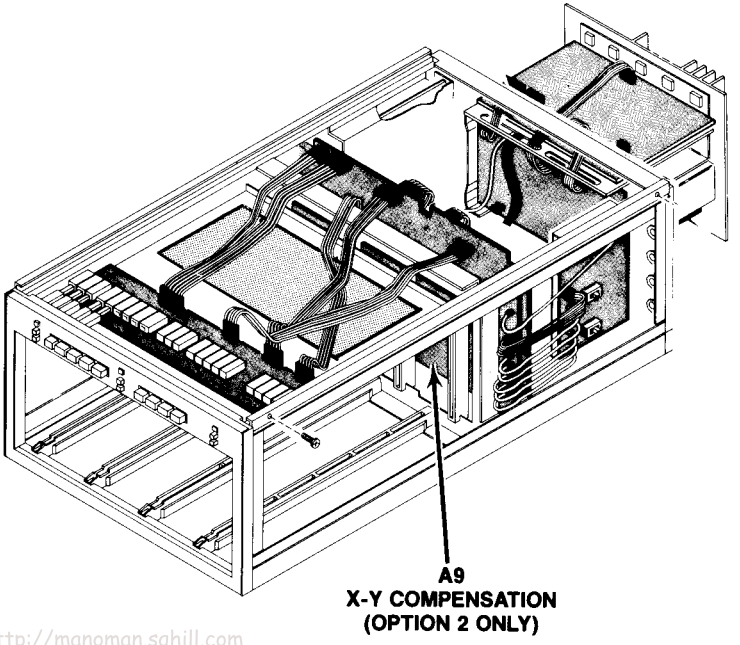

http://manoman.sqhill.com

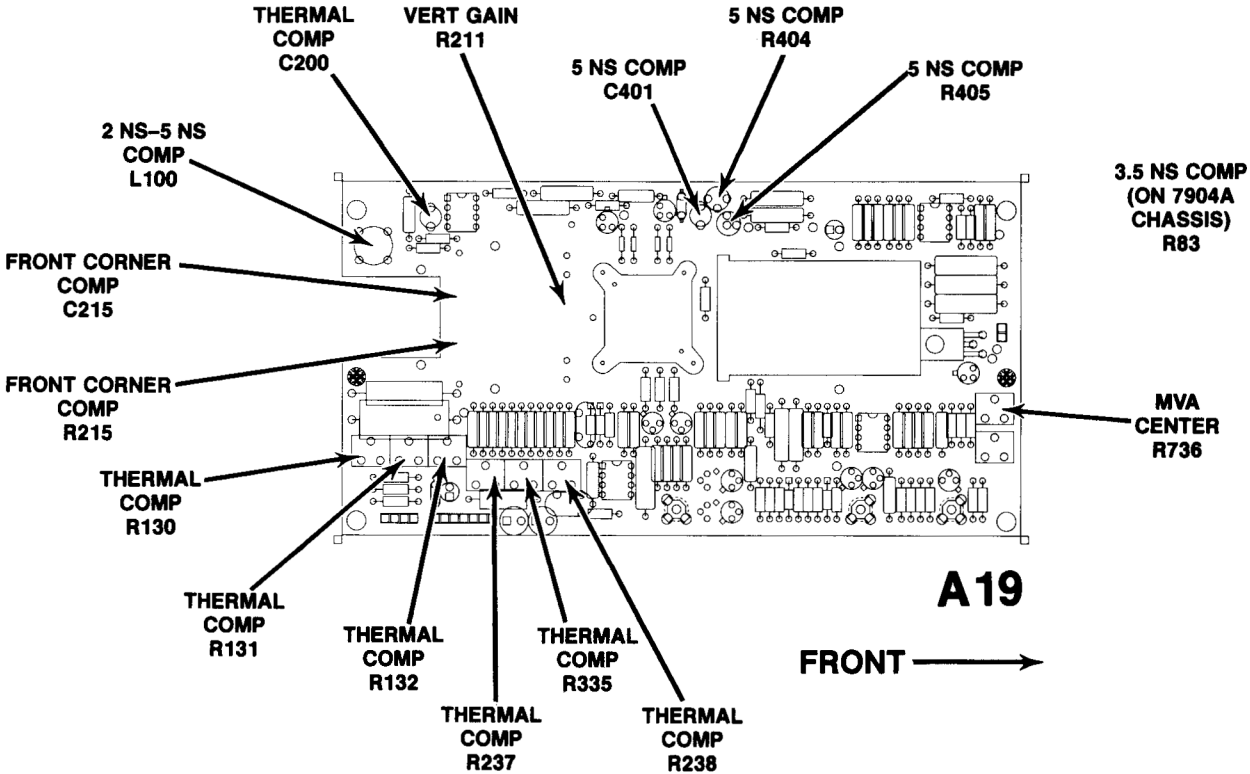

Figure 8-45. Vertical adjustments on A19 — Vertical Amplifier Circuit Board.

http://manoman.sqhill.com

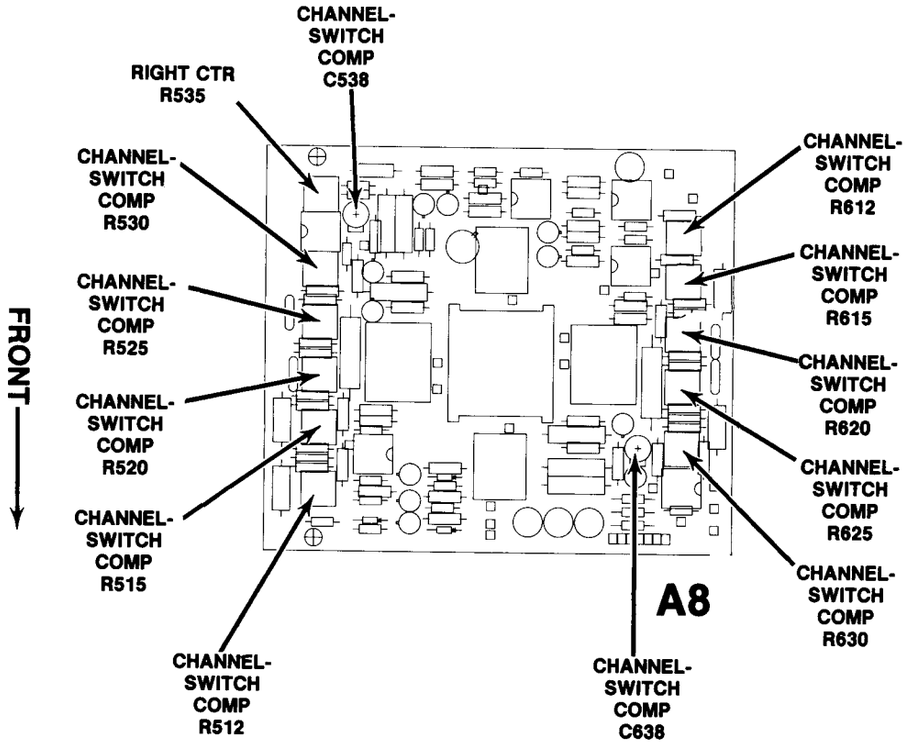

Figure 8-46. Vertical Interface adjustments on A8 — Vertical Interface Circuit Board.

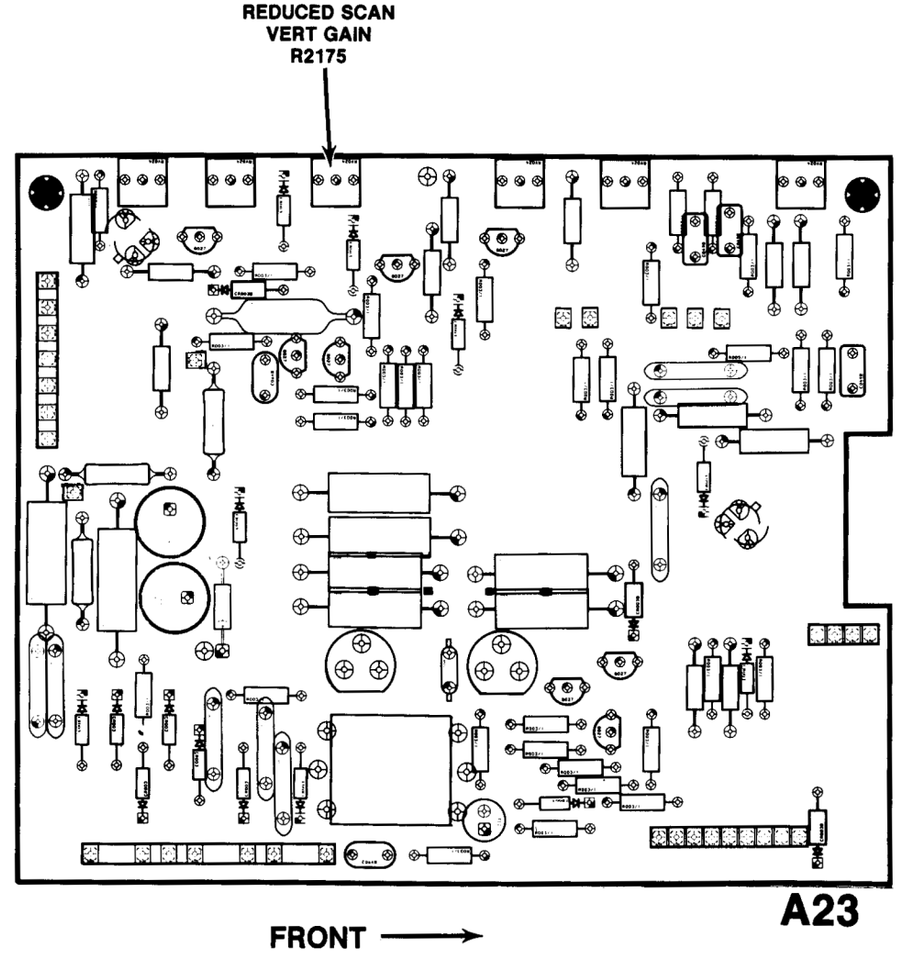

Figure 8-47. Reduced scan vertical adjustments on A23 — Focus Circuit board.

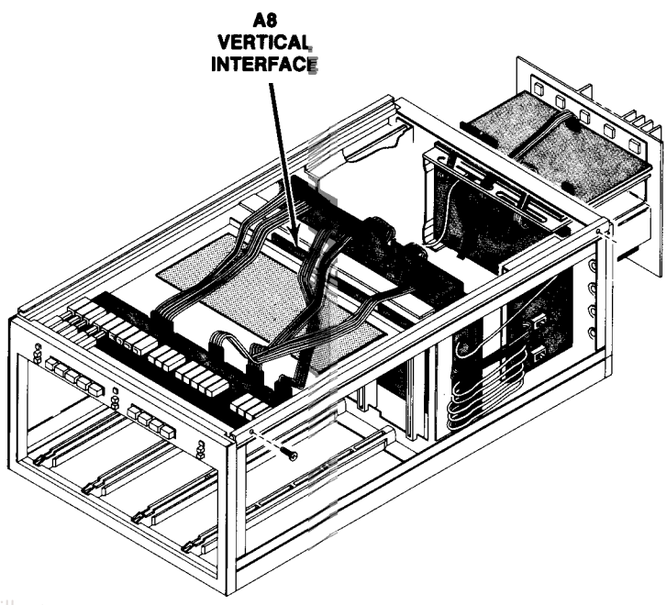

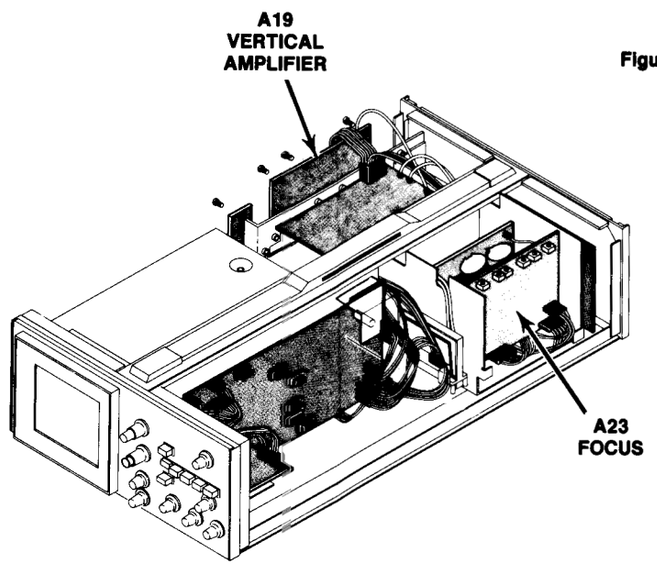

http://manoman.sqhill.com

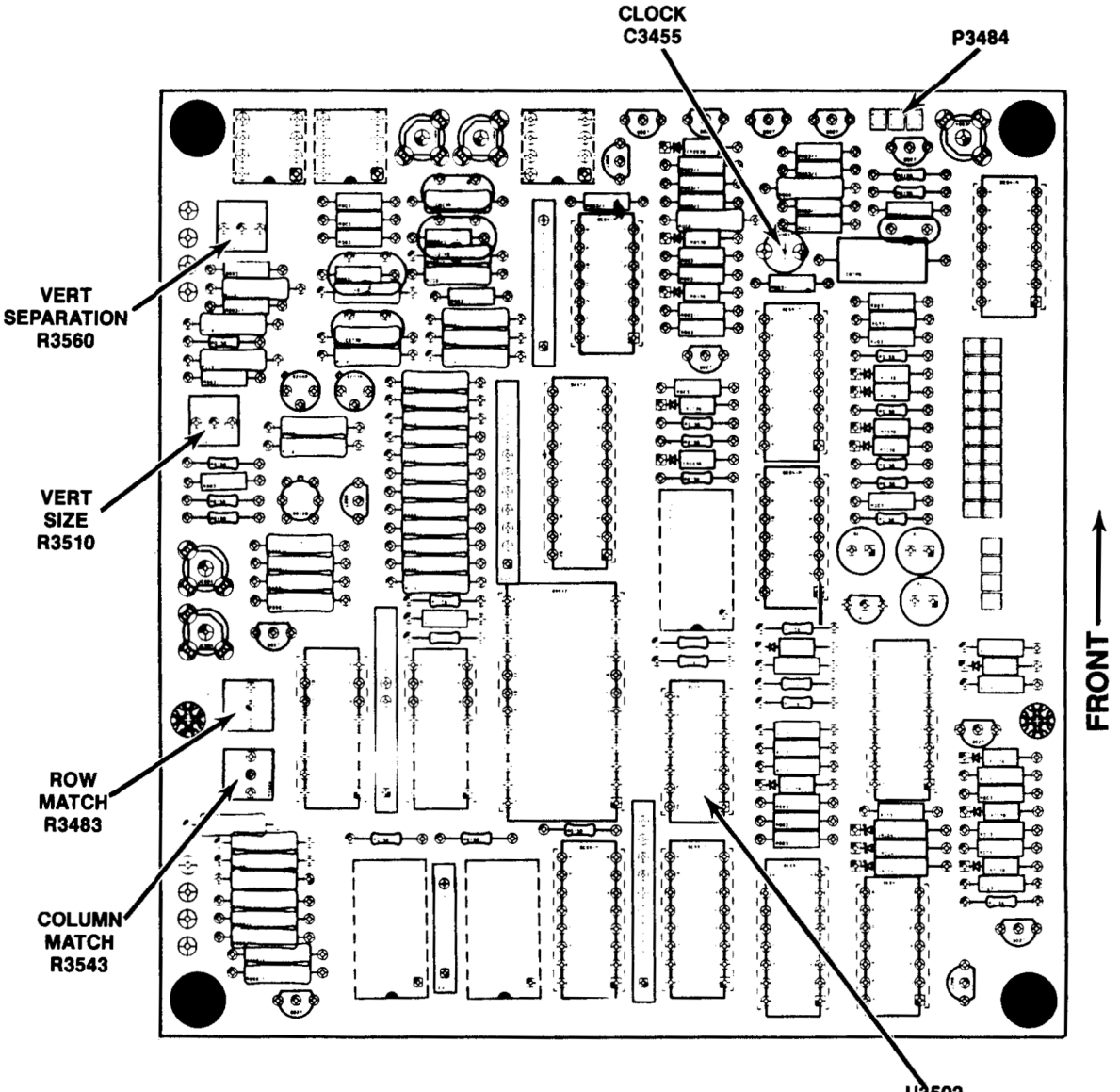

Figure 8-48. Readout adjustments on A13 — Readout Circuit Board.

http://manoman.sqhill.com

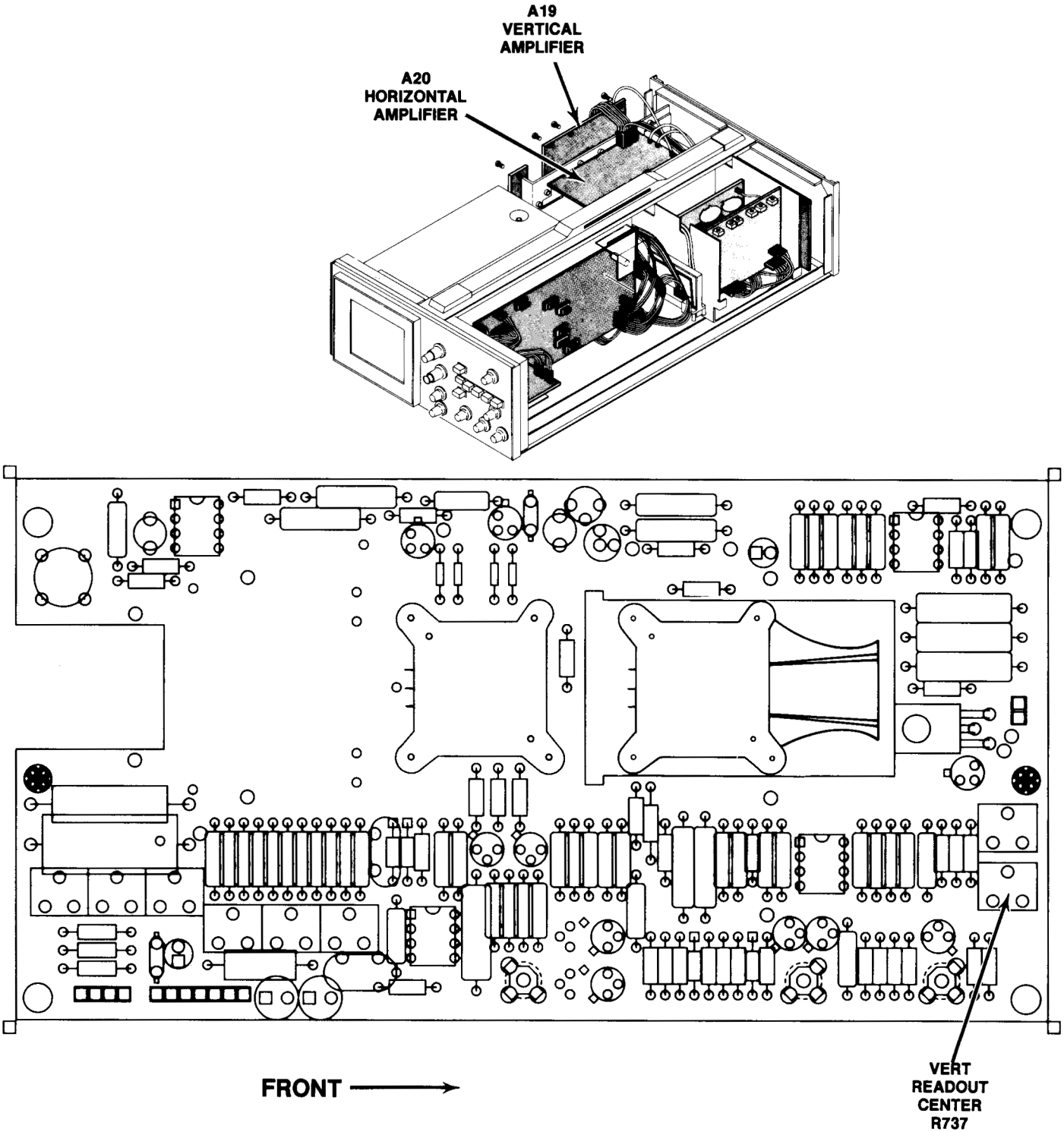

Figure 8-49. Readout adjustments on A19 — Vertical Amplifier Circuit Board.

http://manoman.sqhill.com

FRONT →

A20

HORIZ
READOUT
CENTER
R13

Figure 8-50. Readout adjustments on A20 — Horizontal Amplifier Circuit Board.

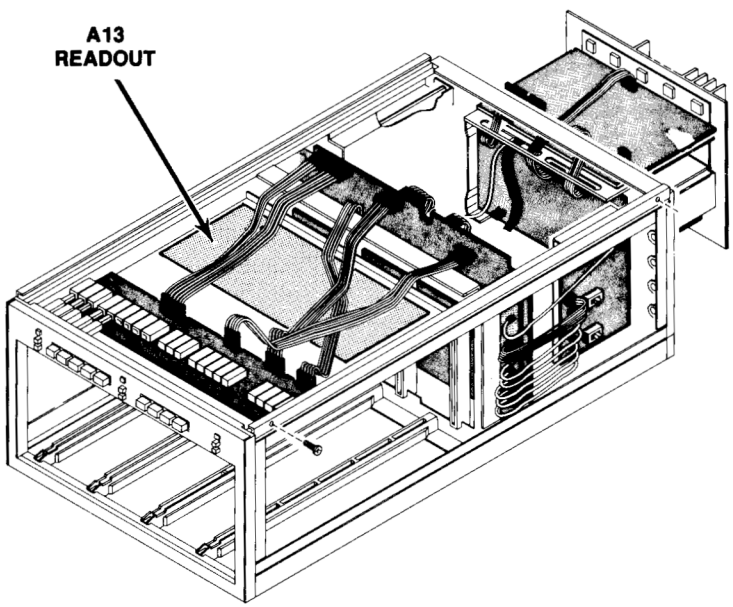

http://manoman.sqhill.com

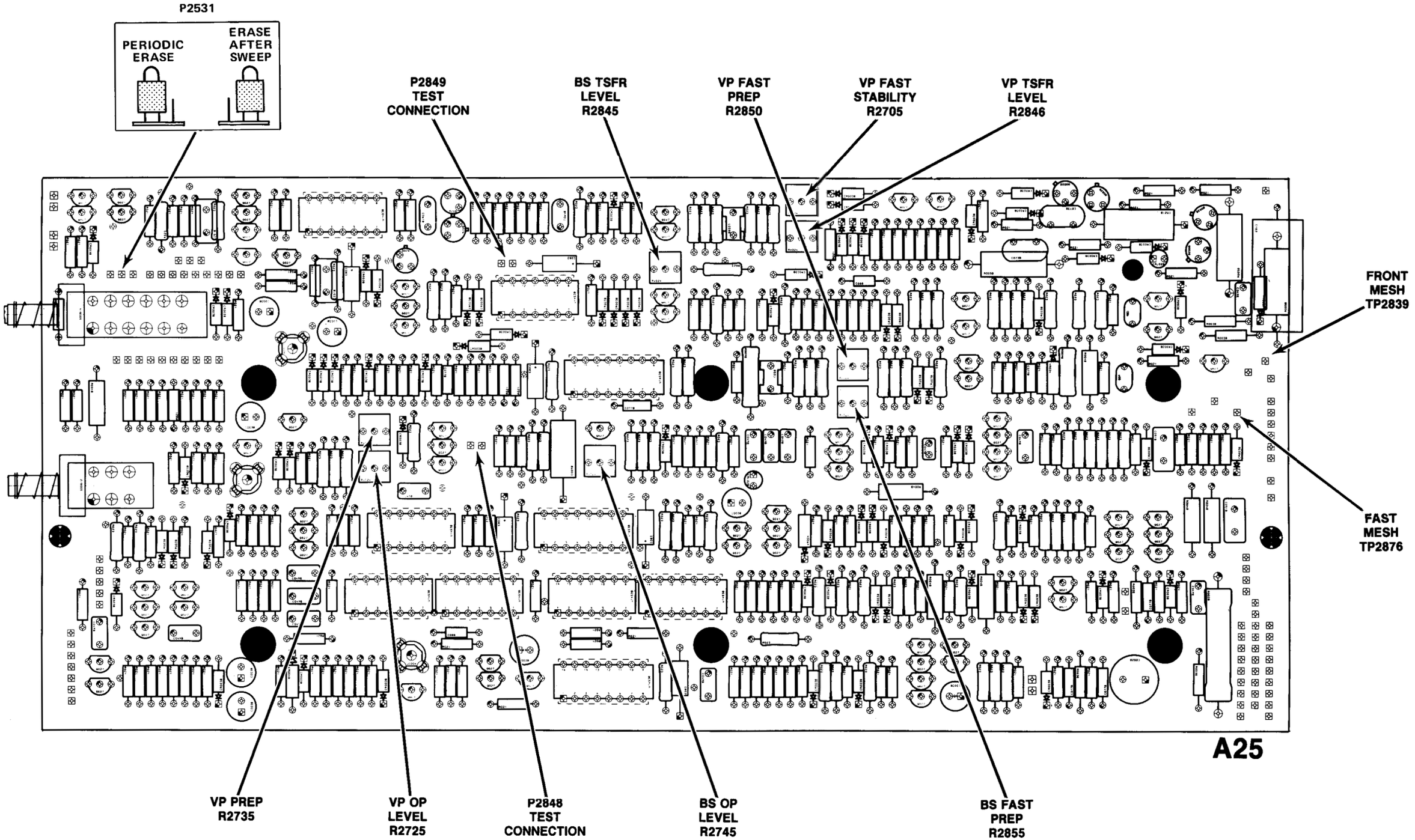

Figure 8-51. Storage adjustments and test points on A25 — Storage Circuit Board.

FRONT

http://manoman.sqnet.com

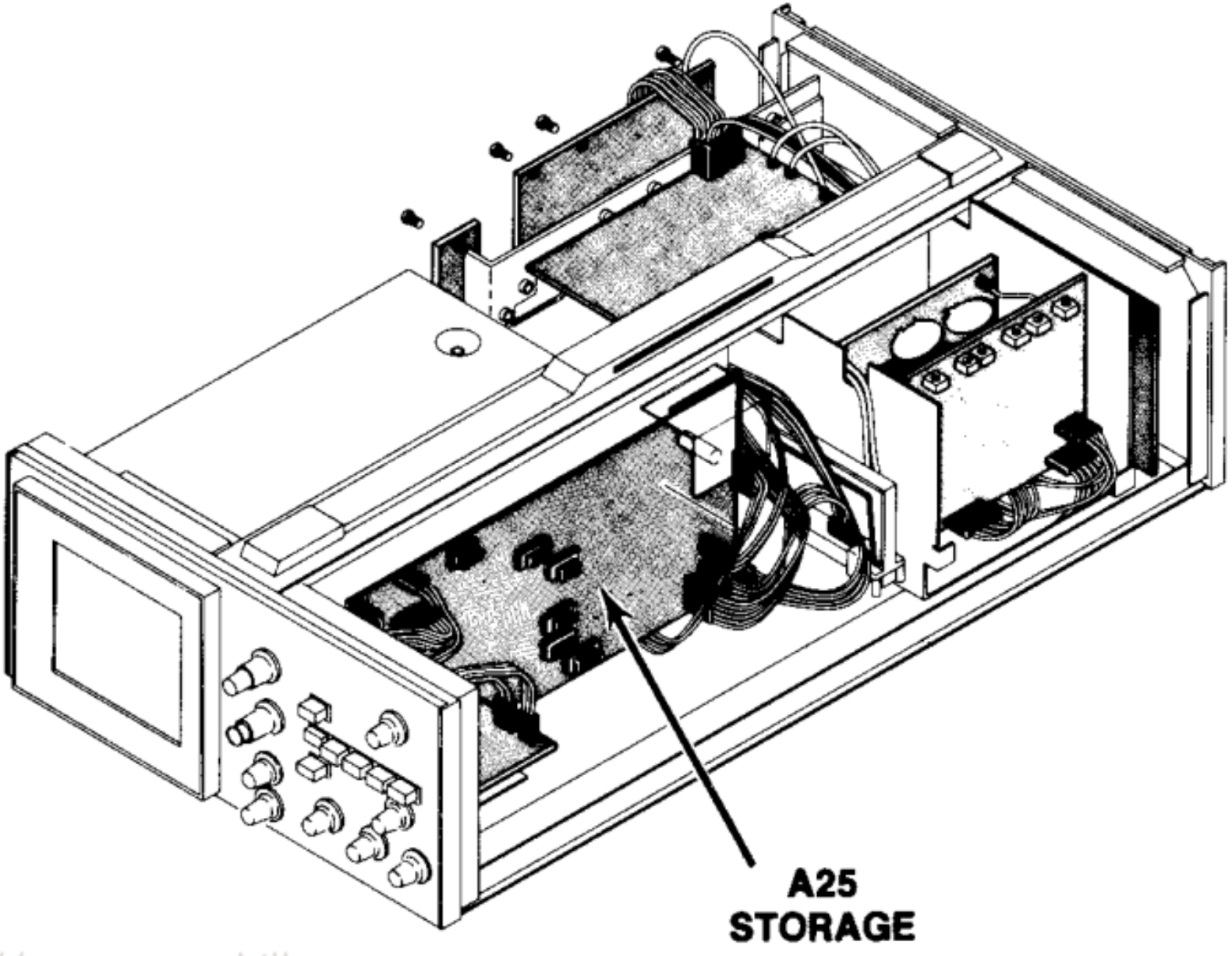

http://manoman.sqhill.com

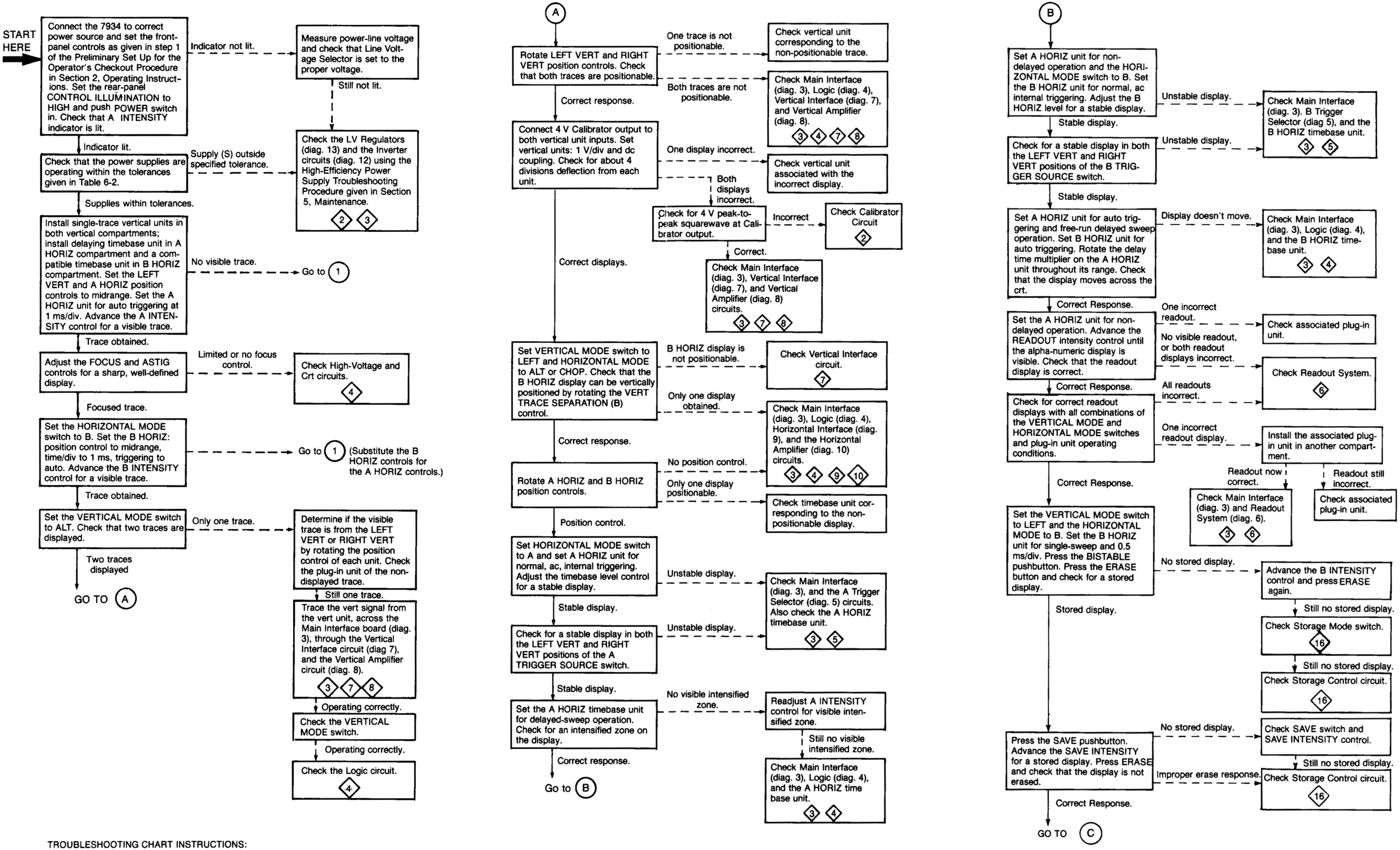

TROUBLESHOOTING CHART INSTRUCTIONS:

1. Beginnning at the top left block of the chart proceed downward until the 7934 does not perform as indicated.
2. Then follow the dashed line as the symptom indicates. Each shaded block indicates a circuit which may be the cause of the malfunction. Refer to Section 4, Theory of Operation, for a detailed discussion of the circuit, and Section 8, Diagrams and Circuit Board Illustrations, for the circuit schematic.

Figure 8-52. 7934 Troubleshooting Chart.

http://manoman.com/

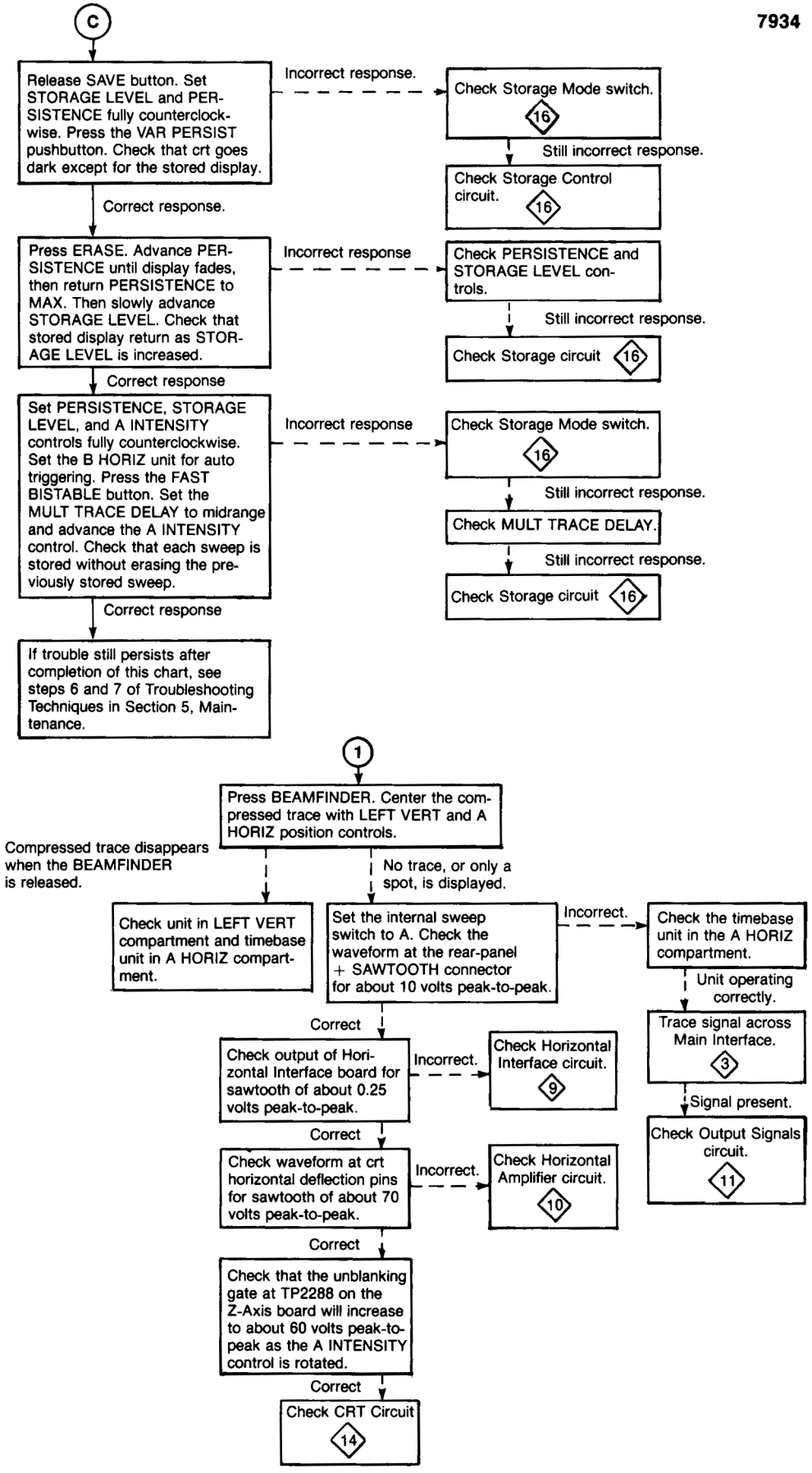

http://manoman.sqhill.com

REPLACEABLE MECHANICAL PARTS

PARTS ORDERING INFORMATION

Replacement parts are available from or through your local Tektronix, Inc. Field Office or representative.

Changes to Tektronix instruments are sometimes made to accommodate improved components as they become available, and to give you the benefit of the latest circuit improvements developed in our engineering department. It is therefore important, when ordering parts, to include the following information in your order: Part number, instrument type or number, serial number, and modification number if applicable.

If a part you have ordered has been replaced with a new or improved part, your local Tektronix, Inc. Field Office or representative will contact you concerning any change in part number.

Change information, if any, is located at the rear of this manual.

ITEM NAME

In the Parts List, an Item Name is separated from the description by a colon (:). Because of space limitations, an Item Name may sometimes appear as incomplete. For further Item Name identification, the U.S. Federal Cataloging Handbook H6-1 can be utilized where possible.

FIGURE AND INDEX NUMBERS

Items in this section are referenced by figure and index numbers to the illustrations.

INDENTATION SYSTEM

This mechanical parts list is indented to indicate item relationships. Following is an example of the indentation system used in the description column.

1 2 3 4 5 Name & Description

Assembly and/or Component
Attaching parts for Assembly and/or Component
••••END ATTACHING PARTS••••
Detail Part of Assembly and/or Component
Attaching parts for Detail Part
••••END ATTACHING PARTS••••
Parts of Detail Part
Attaching parts for Parts of Detail Part
••••END ATTACHING PARTS••••

Attaching Parts always appear in the same indentation as the item it mounts, while the detail parts are indented to the right. Indented items are part of, and included with, the next higher indentation.

Attaching parts must be purchased separately, unless otherwise specified.

ABBREVIATIONS

"	INCH
#	NUMBER SIZE
ACTR	ACTUATOR
ADPTR	ADAPTER
ALIGN	ALIGNMENT
AL	ALUMINUM
ASSEM	ASSEMBLED
ASSY	ASSEMBLY
ATTEN	ATTENUATOR
AWG	AMERICAN WIRE GAGE
BD	BOARD
BRKT	BRACKET
BRS	BRASS
BRZ	BRONZE
BSHG	BUSHING
CAB	CABINET
CAP	CAPACITOR
CER	CERAMIC
CHAS	CHASSIS
CKT	CIRCUIT
COMP	COMPOSITION
CONN	CONNECTOR
COV	COVER
CPLG	COUPLING
CRT	CATHODE RAY TUBE
DEG	DEGREE
DWR	DRAWER
ELCTRN	ELECTRON
ELEC	ELECTRICAL
ELCTLT	ELECTROLYTIC
ELEM	ELEMENT
EPL	ELECTRICAL PARTS LIST
EQPT	EQUIPMENT
EXT	EXTERNAL
FIL	FILLISTER HEAD
FLEX	FLEXIBLE
FLH	FLAT HEAD
FLTR	FILTER
FR	FRAME or FRONT
FSTNR	FASTENER
FT	FOOT
FXD	FIXED
GSKT	GASKET
HDL	HANDLE
HEX	HEXAGON
HEX HD	HEXAGONAL HEAD
HEX SOC	HEXAGONAL SOCKET
HLCPS	HELICAL COMPRESSION
HLEXT	HELICAL EXTENSION
HV	HIGH VOLTAGE
IC	INTEGRATED CIRCUIT
ID	INSIDE DIAMETER
IDENT	IDENTIFICATION
IMPLR	IMPELLER
IN	INCH
INCAND	INCANDESCENT
INSUL	INSULATOR
INTL	INTERNAL
LPHLDR	LAMPHOLDER
MACH	MACHINE
MECH	MECHANICAL
MTG	MOUNTING
NIP	NIPPLE
NON WIRE	NOT WIRE WOUND
OBD	ORDER BY DESCRIPTION
OD	OUTSIDE DIAMETER
OVH	OVAL HEAD
PH BRZ	PHOSPHOR BRONZE
PL	PLAIN or PLATE
PLSTC	PLASTIC
PN	PART NUMBER
PNH	PAN HEAD
PWR	POWER
RCPT	RECEPTACLE
RES	RESISTOR
RGD	RIGID
RLF	RELIEF
RTNR	RETAINER
SCH	SOCKET HEAD
SCOPE	OSCILLOSCOPE
SCR	SCREW
SE	SINGLE END
SECT	SECTION
SEMICOND	SEMICONDUCTOR
SHLD	SHIELD
SHLDR	SHOULDERED
SKT	SOCKET
SL	SLIDE
SLFLKG	SELF-LOCKING
SLVG	SLEEVING
SPR	SPRING
SQ	SQUARE
SST	STAINLESS STEEL
STL	STEEL
SW	SWITCH
T	TUBE
TERM	TERMINAL
THD	THREAD
THK	THICK
TNSN	TENSION
TPG	TAPPING
TRH	TRUSS HEAD
V	VOLTAGE
VAR	VARIABLE
W/	WITH
WSHR	WASHER
XFMR	TRANSFORMER
XSTR	TRANSISTOR

http://manoman.sqhill.com

CROSS INDEX - MFR. CODE NUMBER TO MANUFACTURER

Mfr. Code	Manufacturer	Address	City, State, Zip Code
00779	AMP INC	P O BOX 3608	HARRISBURG PA 17105
01121	ALLEN-BRADLEY CO	1201 SOUTH 2ND ST	MILWAUKEE WI 53204
01295	TEXAS INSTRUMENTS INC SEMICONDUCTOR GROUP	13500 N CENTRAL EXPRESSWAY P O BOX 225012 M/S 49	DALLAS TX 75265
01536	TEXTRON INC CAMCAR DIV SEMS PRODUCTS UNIT	1818 CHRISTINA ST	ROCKFORD IL 61108
02735	RCA CORP SOLID STATE DIVISION	ROUTE 202	SOMERVILLE NJ 08876
02768	ILLINOIS TOOL WORKS INC FASTEX DIVISION	195 ALGONQUIN ROAD	DES PLAINES IL 60016
02777	HOPKINS ENGINEERING CO	12900 FOOTHILL BLVD	SAN FERNANDO CA 91342
04713	MOTOROLA INC SEMICONDUCTOR GROUP	5005 E MCDOWELL RD	PHOENIX AZ 85008
06383	PANDUIT CORP	17301 RIDGELAND	TINLEY PARK IL 60477
06950	VSI CORP SCREWCORP DIVISION	13001 E TEMPLE AVE	CITY OF INDUSTRY CA 91746
07707	USM CORP SUB OF EMHART INDUSTRIES INC USM FASTENER DIV	510 RIVER RD	SHELTON CT 06484
09772	WEST COAST LOCKWASHER CO INC	16730 E JOHNSON DRIVE P O BOX 3588	CITY OF INDUSTRY CA 91744
09922	BURNDY CORP	RICHARDS AVE	NORWALK CT 06852
11897	PLASTIGLIDE MFG CORP	2701 W EL SEGUNDO BLVD	HAWTHORNE CA 90250
12327	FREEWAY CORP	9301 ALLEN DR	CLEVELAND OH 44125
12697	CLAROSTAT MFG CO INC	LOWER WASHINGTON ST	DOVER NH 03820
13103	THERMALLOY CO INC	2021 W VALLEY VIEW LANE P O BOX 34829	DALLAS TX 75234
13511	AMPHENOL CADRE DIV BUNKER RAMO CORP		LOS GATOS CA
16428	BELDEN CORP ELECTRONIC DIV	2200 US HWY 27 SOUTH P O BOX 1980	RICHMOND IN 47374
18565	CHOMERICS INC	77 DRAGON COURT	WOBURN MA 01801
18680	HIGHLAND MFG CO THE DIV OF BUELL INDUSTRIES INC		
22526	DU PONT E I DE NEMOURS AND CO INC DU PONT CONNECTOR SYSTEMS	30 HUNTER LANE	CAMP HILL PA 17011
24931	SPECIALTY CONNECTOR CO INC	2620 ENDRESS PLACE P O BOX D	GREENWOOD IN 46142
26365	GRIES REPRODUCER CO DIV OF COATS AND CLARK INC	125 BEECHWOOD AVE	NEW ROCHELLE NY 10802
28520	HEYCO MOLDED PRODUCTS	147 MICHIGAN AVE P O BOX 160	KENILWORTH NJ 07033
30817	INSTRUMENT SPECIALTIES COMPANY, INC.		LITTLE FALLS, NJ 07424
31918	ITT SCHADOW INC	8081 WALLACE RD	EDEN PRAIRIE MN 55343
32997	BOURNS INC TRIMPOT DIV	1200 COLUMBIA AVE	RIVERSIDE CA 92507
34785	DEK INC	3480 SWENSON DRIVE	ST CHARLES IL 60174
44655	OHMITE MFG CO	3601 W HOWARD ST	SKOKIE IL 60076
56289	SPRAGUE ELECTRIC CO	87 MARSHALL ST	NORTH ADAMS MA 01247
60211	VOLTAGE MULTIPLIERS INC	8711 WEST ROOSEVELT	VISALIA CA 93291
70318	ALLMETAL SCREW PRODUCTS CO INC	821 STEWART AVE	GARDEN CITY NY 11530
70485	ATLANTIC INDIA RUBBER WORKS INC	571 W POLK ST	CHICAGO IL 60607
70903	BELDEN CORP	2000 S BATAVIA AVE	GENEVA IL 60134
73743	FISCHER SPECIAL MFG CO	446 MORGAN ST	CINCINNATI OH 45206
74445	HOLO-KROME CO	31 BROOK ST	WEST HARTFORD CT 06110
77342	AMF INC POTTER AND BRUMFIELD DIV	200 RICHLAND CREEK DR	PRINCETON IN 47670
77900	SHAKEPROOF DIV OF ILLINOIS TOOL WORKS	SAINT CHARLES RD	ELGIN IL 60120
78189	ILLINOIS TOOL WORKS INC SHAKEPROOF DIVISION	ST CHARLES ROAD	ELGIN IL 60120
80009	TEKTRONIX INC	4900 S W GRIFFITH DR P O BOX 500	BEAVERTON OR 97077
80033	MICRODOT MANUFACTURING INC PRESTOLE EVERLOCK DIV	1345 MIAMI ST P O BOX 278	TOLEDO OH 43605

http://manoman.sqhill.com

CROSS INDEX - MFR. CODE NUMBER TO MANUFACTURER

Mfr. Code	Manufacturer	Address	City, State, Zip Code
81350	JOINT ARMY-NAVY SPECIFICATIONS, PROMULGATED BY MILITARY DEPARTMENTS UNDER AUTHORITY OF DEFENSE STANDARDIZATION MANUAL 4120 3-M		
82389	SWITCHCRAFT INC SUB OF RAYTHEON CO	5555 N ELSTRON AVE	CHICAGO IL 60630
82877	ROTRON INC	7-9 HASBROUCK LANE	WOODSTOCK NY 12498
83385	MICRODOT MANUFACTURING INC GREER-CENTRAL DIV	3221 W BIG BEAVER RD	TROY MI 48098
83553	ASSOCIATED SPRING BARNES GROUP INC	15001 S BROADWAY P O BOX 231	GARDENA CA 90248
86928	SEASTROM MFG CO INC	701 SONORA AVE	GLENDALE CA 91201
87308	N L INDUSTRIES INC N L FASTENERS	BARKLEY RD P O BOX 1360	STATESVILLE NC 28677
88245	LITTON SYSTEMS INC USECO DIV	13536 SATICOY ST	VAN NUYS CA 91409
91500	ASHEVILLE-SCHOONMAKER MICA CO	910 JEFFERSON AVE P O BOX 318	NEWPORT NEWS VA 23607
91836	KINGS ELECTRONICS CO INC	40 MARBLEDALE ROAD	TUCKAHOE NY 10707
93907	TEXTRON INC CAMCAR DIV	600 18TH AVE	ROCKFORD IL 61101
95987	WECKESSER CO INC	4444 WEST IRVING PARK RD	CHICAGO IL 60641
98159	RUBBER TECK, INC.	19115 HAMILTON AVE., P O BOX 389	GARDENA, CA 90247
98978	INTERNATIONAL ELECTRONIC RESEARCH CORP SUB OF DYNAMICS CORP OF AMERICA	135 W MAGNOLIA BLVD	BURBANK CA 91502
S3109	FELLER ASA ADOLF AG C/O PANEL COMPONENTS CORP	355 TESCONI CIRCLE	SANTA ROSA CA 95401
S3629	SCHURTER AG H C/O PANEL COMPONENTS CORP	2015 SECOND STREET	BERKELEY CA 94170
TK0433	PORTLAND SCREW CO	6520 N BASIN	PORTLAND OR 97217
TK0435	LEWIS SCREW CO	4114 S PEORIA	CHICAGO IL 60609
TK0861	H SCHURTER AG DIST PANEL COMPONENTS	2015 SECOND STREET	BERKELEY CA 94170
TK1281	MICRO PLASTICS INC	HWY 178 NORTH	FLIPPIN AR 72634
TK1373	PATELEC-CEM (ITALY)	10156 TORINO	VAICENTALLO 62/455 ITALY
TK1543	CAMCAR/TEXTRON	516 18TH AVE	ROCKFORD IL 61101

http://manoman.sqhill.com

Fig. & Index No.	Tektronix Part No.	Serial/Assembly No. Effective	Dscont	Qty	12345 Name & Description	Mfr. Code	Mfr. Part No.
1-1	390-0549-00			1	CAB.SIDE,SCOPE:LEFT	80009	390-0549-00
-2	214-0603-02			4	.PIN ASSY,SECRG:W/SPRING WASHER	80009	214-0603-02
-3	386-1151-00			4	.CLAMP,RIM CLENC:SPG STL CD PL	83553	ORDER BY DESCR
-4	386-0227-00			4	.STOP,CLP,RIM CL:	80009	386-0227-00
-5	390-0694-00			1	CAB.SIDE,SCOPE:RIGHT	80009	390-0694-00
-6	214-0603-02			4	.PIN ASSY,SECRG:W/SPRING WASHER	80009	214-0603-02
-7	386-1151-00			4	.CLAMP,RIM CLENC:SPG STL CD PL	83553	ORDER BY DESCR
-8	386-0227-00			4	.STOP,CLP,RIM CL:	80009	386-0227-00
-9	200-0728-00			2	COVER,HDL END:1.91 X 0.91 X 0.36 BLUE	80009	200-0728-00
-10	367-0108-00			1	HANDLE,CARRYING:19.19 L,BLUE VINYL	80009	367-0108-00
					(ATTACHING PARTS)		
-11	212-0628-00			4	SCREW,SHOULDER:10-32 X 0.4 L,RDH,STL	TK1543	ORDER BY DESCR
					(END ATTACHING PARTS)		
-12	386-1624-00			2	PLATE,HDL RTNG:STAINLESS STEEL	80009	386-1624-00
-13	386-1283-01			2	PLATE,HDL MTG:FRONT	80009	386-1283-01
-14	426-0819-01			1	FRAME SECT,CAB.:TOP CENTER	80009	426-0819-01
-15	390-0555-00			1	CAB.BOT,SCOPE:	80009	390-0555-00
-16	214-0603-02			6	.PIN ASSY,SECRG:W/SPRING WASHER	80009	214-0603-02
-17	386-1151-00			6	.CLAMP,RIM CLENC:SPG STL CD PL	83553	ORDER BY DESCR
-18	386-0227-00			6	.STOP,CLP,RIM CL:	80009	386-0227-00
-19	348-0193-00			1	FLIP-STAND,CAB.:3.438 H,SST	80009	348-0193-00
-20	348-0074-00			2	HINGE BLOCK,STA:R FR,L REAR,BLACK ACETAL	80009	348-0074-00
					(ATTACHING PARTS)		
-21	211-0532-00			4	SCREW,MACHINE:6-32 X .750,FILH,STL	TK0435	ORDER BY DESCR
-22	210-0457-00			4	NUT,PL,ASSEM WA:6-32 X 0.312,STL CD PL	78189	511-061800-00
					(END AATTACHING PARTS)		
-23	377-0119-00			2	INSERT,FOOT:0.352 X 0.832 X 0.934,PU	80009	377-0119-00
-24	343-0256-00			2	RTNR BLK,SCOPE:PLASTIC	80009	343-0256-00
					(ATTACHING PARTS)		
-25	213-0192-00			4	SCREW,TPG,TF:6-32 X 0.5,SPCL TYPE,FILH,STL	87308	ORDER BY DESCR
-26	210-0457-00			4	NUT,PL,ASSEM WA:6-32 X 0.312,STL CD PL	78189	511-061800-00
					(END ATTACHING PARTS)		
-27	348-0073-01			2	HINGE BLOCK,STA:L FR,R REAR,BLACK ACETAL	80009	348-0073-01
					(ATTACHING PARTS)		
-28	211-0532-00			4	SCREW,MACHINE:6-32 X .750,FILH,STL	TK0435	ORDER BY DESCR
-29	210-0457-00			4	NUT,PL,ASSEM WA:6-32 X 0.312,STL CD PL	78189	511-061800-00
					(END ATTACHING PARTS)		
-30	377-0119-00			2	INSERT,FOOT:0.352 X 0.832 X 0.934,PU	80009	377-0119-00
-31	426-0814-00			2	FRAME SECT,CAB.:BOTTOM LEFT & RIGHT	80009	426-0814-00
					(ATTACHING PARTS)		
-32	211-0507-00			2	SCREW,MACHINE:6-32 X 0.312,PNH,STL	83385	ORDER BY DESCR
-33	210-0457-00			2	NUT,PL,ASSEM WA:6-32 X 0.312,STL CD PL	78189	511-061800-00
					(END ATTACHING PARTS)		

http://manoman.sqhill.com

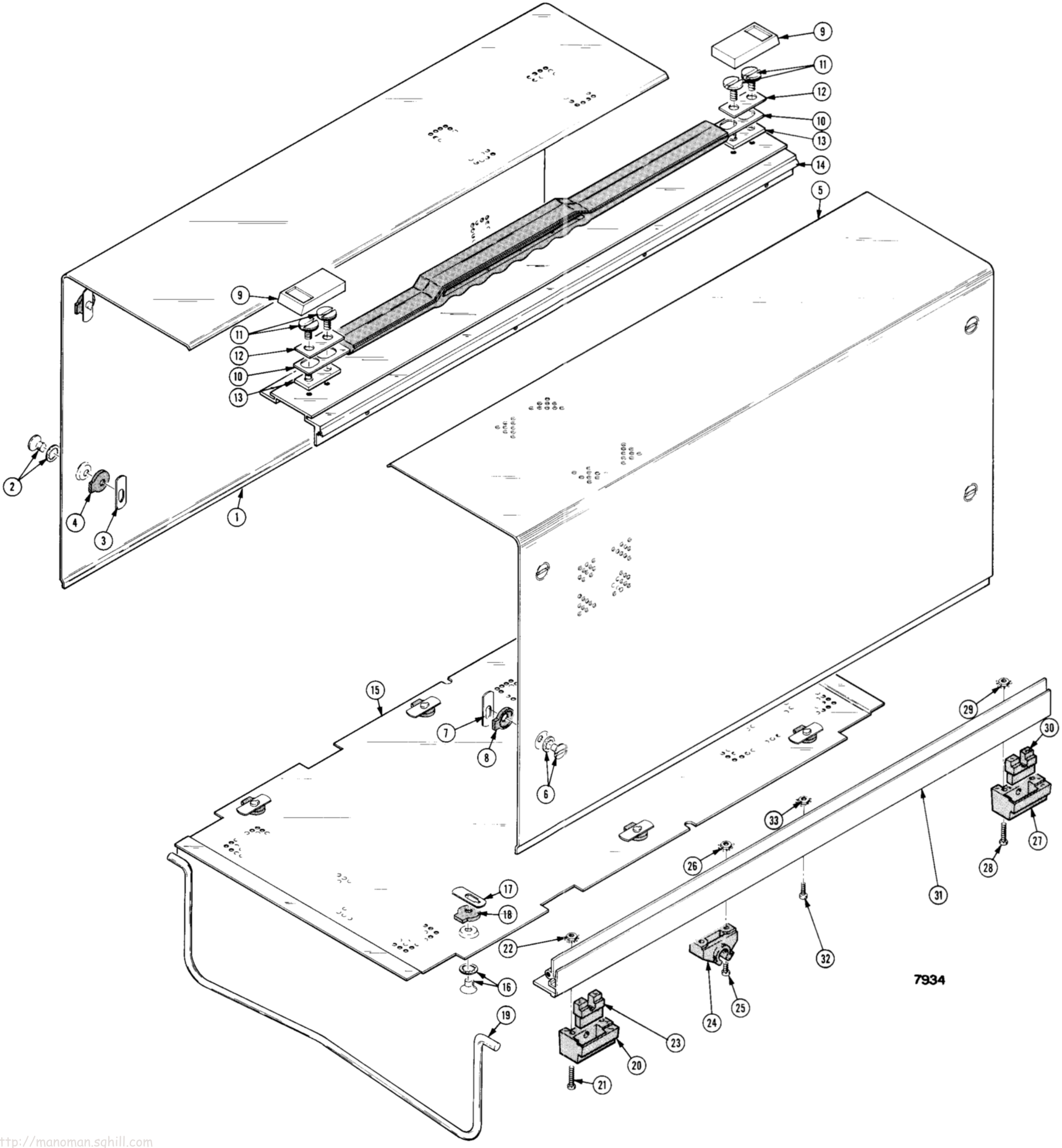

http://manoman.sqhill.com

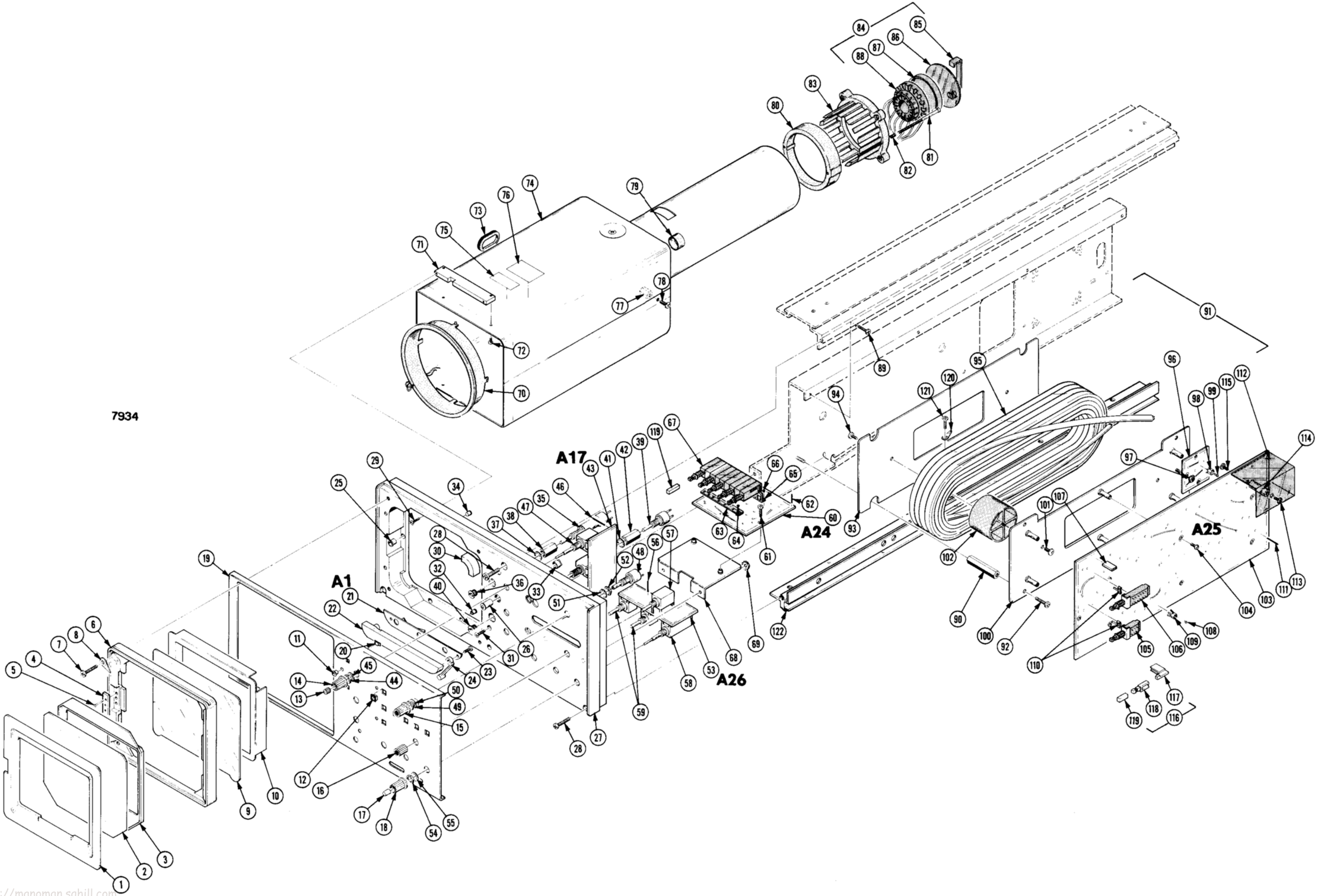

http://manoman.sqhill.com

Fig. & Index No.	Tektronix Part No.	Serial/Assembly No. Effective	Dscont	Qty	12345 Name & Description	Mfr. Code	Mfr. Part No.
2-1	426-0514-00			1	FRAME,MASK:	80009	426-0514-00
-2	378-0625-02			1	FILTER,LT,CRT:GRAY,5.15 X 4.4 X 0.03	80009	378-0625-02
-3	331-0258-03			1	MASK,CRT SCALE:	80009	331-0258-03
-4	204-0380-00			1	BODY,TERMINAL:	80009	204-0380-00
					(ATTACHING PARTS)		
-5	131-0765-01			3	TERM,FEEDTHRU:0.584 L X 0.625 OD,BRS	80009	131-0765-01
					(END ATTACHING PARTS)		
-6	200-0939-01			1	RTNR,CRT SCALE:5.55 X 5.068 X 0.475	80009	200-0939-01
					(ATTACHING PARTS)		
-7	212-0008-00			4	SCREW,MACHINE:8-32 X 0.5,PNH,STL	83385	ORDER BY DESCR
					(END ATTACHING PARTS)		
-8	131-1022-00			2	CONTACT,ELEC:GROUNDING,SST	80009	131-1022-00
-9	337-1159-03			1	SHLD,IMPLOSION:4.75 X 3.93 X 0.7 THK,PLSTC	80009	337-1159-03
					SAFETY CONTROLLED		
-10	331-0245-00			1	MASK,CRT SCALE:	80009	331-0245-00
-11	358-0301-02			3	BUSHING,SLEEVE:0.16 ID X 0.205 OD	80009	358-0301-02
-12	426-1072-00			7	FRAME,PUSH BTN:SILVER GRAY PLSTC	80009	426-1072-00
-13	366-1391-00			1	KNOB:GY,0.081 ID X 0.28 OD X 0.32 H	80009	366-1391-00
-14	366-1077-00			1	KNOB:GRAY W/SETSCREW	80009	366-1077-00
-15	366-1189-00			5	KNOB:GY,0.127 ID X 0.5 OD X 0.531	80009	366-1189-00
-16	366-1023-01			1	KNOB:GY,0.127 ID X 0.392 OD X 0.531 H	80009	366-1023-01
-17	366-1059-00			2	PUSH BUTTON:GRAY,0.227 OD X 0.3	80009	366-1059-00
-18	366-1215-03			2	KNOB:GY,0.127 ID X 0.5 OD X 0.531 H	80009	366-1215-03
-19	333-3281-00			1	PANEL,FRONT:UPPER UNIT	80009	333-3281-00
-20	378-0635-01			1	LENS,LIGHT:WHITE,MARKED A	80009	378-0635-01
	378-0635-02			1	LENS,LIGHT:WHITE,MARKED B	80009	378-0635-02
-21	----- -----			1	CIRCUIT BD ASSY:GRATICULE LAMPS		
					(SEE A1 REPL)		
					CKT BOARD ASSY INCLUDES:		
-22	378-0614-01			1	.REFLECTOR,LIGHT:INT SCALE ILLUMINATION	80009	378-0614-01
					.(ATTACHING PARTS)		
-23	211-0162-00			2	.SCREW,MACHINE:2-56 X 0.188,SCH,SST	TK0428	ORDER BY DESCR
					.(END ATTACHING PARTS)		
-24	344-0179-00			2	.CLIP,REFL RTNG:ACETAL,NAT	80009	344-0179-00
-25	348-0055-00			1	GROMMET,PLASTIC:GRAY,ROUND,0.207 ID	80009	348-0055-00
-26	352-0157-00			4	LAMPHOLDER:(1)T-2 UNBASED,WHITE	80009	352-0157-00
-27	426-2120-00			1	FRAME SECT,CAB.:FRONT,UPPER	80009	426-2120-00
					(ATTACHING PARTS)		
-28	213-0270-00			3	SCREW,TPG,TF:10-32 X 0.75,SPCL TYPE,FILH	TK1543	234-74658-026
					(END ATTACHING PARTS)		
					FRONT FRAME ASSY INCLUDES:		
-29	211-0117-00			4	SCREW,MACHINE:4-40 X 0.312,FLH,100 DEG,SST	70318	ORDER BY DESCR
-30	386-1517-00			4	.SUPPORT,CRT:FRONT	80009	386-1517-00
-31	211-0538-00			2	SCREW,MACHINE:6-32 X 0.312,FLH,100 DEG	93907	ORDER BY DESCR
					(ATTACHING PART TO FIG.3-85 RMPL)		
-32	348-0031-00			1	GROMMET,PLASTIC:0.127 ID,GRAY ACETAL	80009	348-0031-00
-33	200-0935-00			4	BASE,LAMPHOLDER:0.29 OD X 0.19 L,BK PLSTC	80009	200-0935-00
-34	131-0119-00			1	JACK,TIP:BANANA,CHASSIS MTD	80009	131-0119-00
-35	----- -----			1	RES,VAR,NONWW:PNL,250K OHM,0.5W		
					(SEE R2195 REPL)		
					(ATTACHING PARTS)		
-36	358-0409-00			1	BSHG,MACH THD:0.25-32 X 0.159 ID,0.247 L	80009	358-0409-00
-37	210-0046-00			1	WASHER,LOCK:0.261 ID,INTL,0.018 THK,STL	77900	1214-05-00-0541C
-38	210-0471-00			1	NUT,SLEEVE:0.25-32 X 0.594 L X 0.312 HEX,AL	80009	210-0471-00
					(END ATTACHING PARTS)		
-39	----- -----			1	RES,VAR,NONWW:PNL,5K OHM,0.5W		
					(SEE R2465 REPL)		
					(ATTACHING PARTS)		
-40	358-0409-00			1	BSHG,MACH THD:0.25-32 X 0.159 ID,0.247 L	80009	358-0409-00
-41	210-0046-00			1	WASHER,LOCK:0.261 ID,INTL,0.018 THK,STL	77900	1214-05-00-0541C
-42	210-0471-00			1	NUT,SLEEVE:0.25-32 X 0.594 L X 0.312 HEX,AL	80009	210-0471-00
					(END ATTACHING PARTS)		
-43	----- -----			1	CIRCUIT BD ASSY:INTENSITY CONTROL		
					(SEE A17 REPL)		
					(ATTACHING PARTS)		
-44	210-0583-00			4	NUT,PLAIN,HEX:0.25-32 X 0.312,BRS CD PL	73743	2X-20319-402

http://manoman.sqhill.com

Fig. & Index No.	Tektronix Part No.	Serial/Assembly No. Effective	Dscont	Qty	12345 Name & Description	Mfr. Code	Mfr. Part No.
2-45	210-0940-00			4	WASHER,FLAT:0.25 ID X 0.375 OD X 0.02,STL	12327	ORDER BY DESCR
					(END ATTACHING PARTS)		
					CKT BOARD ASSY INCLUDES:		
-46	131-0589-00			20	.TERM,PIN:0.46 L X 0.025 SQ PH BRZ GLD	22526	48283-029
-47	----- -----			5	.RES,VAR,NONWW:PNL,5K OHM/50K OHM,10%,		
					.0.25 W		
					.(SEE A17R1101,R1201,R1303,R1401,		
					.R1402 REPL)		
-48	----- -----			1	RES,VAR,NONWW:TRMR,10K OHM,0.5W		
					(SEE R2720 REPL)		
					(ATTACHING PARTS)		
-49	210-0583-00			1	NUT,PLAIN,HEX:0.25-32 X 0.312,BRS CD PL	73743	2X-20319-402
-50	210-0940-00			1	WASHER,FLAT:0.25 ID X 0.375 OD X 0.02,STL	12327	ORDER BY DESCR
-51	210-0046-00			1	WASHER,LOCK:0.261 ID,INTL,0.018 THK,STL	77900	1214-05-00-0541C
-52	210-0583-00			1	NUT,PLAIN,HEX:0.25-32 X 0.312,BRS CD PL	73743	2X-20319-402
					(END ATTACHING PARTS)		
-53	----- -----			1	CIRCUIT BD ASSY:STORAGE CONTROL		
					(SEE A26 REPL)		
					(ATTACHING PARTS)		
-54	210-0583-00			4	NUT,PLAIN,HEX:0.25-32 X 0.312,BRS CD PL	73743	2X-20319-402
-55	210-0940-00			4	WASHER,FLAT:0.25 ID X 0.375 OD X 0.02,STL	12327	ORDER BY DESCR
					(END ATTACHING PARTS)		
					CKT BOARD ASSY INCLUDES:		
-56	131-0589-00			15	.TERM,PIN:0.46 L X 0.025 SQ PH BRZ GLD	22526	48283-029
-57	- --- -----			1	.RES,VAR,NONWW:500K OHM,10%,0.125W		
					.(SEE A26R1301 REPL)		
-58	----- -----			1	.RES,VAR,NONWW:10K OHM,10%,0.125W		
					.(SEE A26R1401 REPL)		
-59	- --- -----			2	.RES,VAR,NONWW:10K OHM,10%,0.25W		
					.(SEE A26R1101,R1201 REPL)		
-60	----- -----			1	CIRCUIT BD ASSY:STORAGE MODE SWITCH		
					(SEE A24 REPL)		
					(ATTACHING PARTS)		
-61	211-0008-00			2	SCREW,MACHINE:4-40 X 0.25,PNH,STL	93907	ORDER BY DESCR
					(END ATTACHING PARTS)		
					CKT BOARD ASSY INCLUDES:		
-62	131-0589-00			17	.TERM,PIN:0.46 L X 0.025 SQ PH BRZ GLD	22526	48283-029
-63	343-0495-09			1	.CLIP,SWITCH:FRONT,7.5MM X 9 UNIT	80009	343-0495-09
					.(ATTACHING PARTS)		
-64	210-3033-00			18	.EYELET,METALLIC:0.059 OD X 0.156 L,BRS	07707	SE-25
					.(END ATTACHING PARTS)		
-65	343-0499-13			1	.CLIP,SWITCH:7.5MM X 4 UNIT	80009	343-0499-13
	343-0499-14			1	.CLIP,SWITCH:7.5MM X 5 UNIT	80009	343-0499-14
					.(ATTACHING PARTS)		
-66	210-3033-00			18	.EYELET,METALLIC:0.059 OD X 0.156 L,BRS	07707	SE-25
					.(END ATTACHING PARTS)		
-67	----- -----			1	.SWITCH PB ASSY:5 LATCH,7.5MM,5 CONT,4 FR		
					.(SEE A24S2404 REPL)		
-68	407-3440-00			1	BRACKET,CKT BD:ALUMINUM	80009	407-3440-00
					(ATTACHING PARTS)		
-69	210-0457-00			2	NUT,PL,ASSEM WA:6-32 X 0.312,STL CD PL	78189	511-061800-00
					(END ATTACHING PARTS)		
-70	108-0851-00			1	COIL,TUBE DEFL:TRACE ROTATOR	80009	108-0851-00
-71	214-2417-00			2	NUT BAR:3.1 L,W/(4) 4-40 THD,AL	80009	214-2417-00
					(ATTACHING PARTS)		
-72	211-0110-00			4	SCREW,MACHINE:4-40 X 0.312,PNH,BRS	83385	ORDER BY DESCR
					(END ATTACHING PARTS)		
-73	348-0233-00			1	GROMMET,PLASTIC:GRAY,OBLONG 0.847 X 0.347	80009	348-0233-00
-74	337-2217-00			1	SHIELD,CRT:	80009	337-2217-00
-75	334-1379-00			1	MARKER,IDENT:MKD HI VACUUM	80009	334-1379-00
-76	334-2208-00			1	MARKER,IDENT:MKD DANGER	80009	334-2208-00
-77	166-0098-00			2	SPACER,POST:0.656 L W/8-32 THD THRU,AL,	80009	166-0098-00
					0.375 HEX		
					(ATTACHING PARTS)		
-78	212-0004-00			2	SCREW,MACHINE:8-32 X 0.312,PNH,STL	TK0435	ORDER BY DESCR
					(END ATTACHING PARTS)		
-79	348-0064-00			1	GROMMET,PLASTIC:GRAY,ROUND,0.582 ID	80009	348-0064-00

http://manoman.sqhill.com

Fig. & Index No.	Tektronix Part No.	Serial/Assembly No. Effective	Dscont	Qty	12345 Name & Description	Mfr. Code	Mfr. Part No.
2-80	354-0347-00			1	RING,CRT CLAMP:2.127 ID X 2.595 OD X 0.563	80009	354-0347-00
					(ATTACHING PARTS)		
-81	211-0170-00			2	SCREW,MACHINE:4-40 X 2.25,PNH,SST	TK0435	ORDER BY DESCR
-82	214-1333-00			2	SPRING,HLCPS:0.213 OD X 0.375,CLE,CU-BE,CD	80009	214-1333-00
					PL		
					(END ATTACHING PARTS)		
-83	343-0205-01			1	RTNR,ELCTRN TU:3.0 DIA X 1.5 L,DELRIN	80009	343-0205-01
-84	136-0661-01			1	SOCKET ASSY,CRT:	80009	136-0661-01
					CRT SOCKET ASSY INCLUDES:		
-85	343-0254-00			1	.CLP,ELCTRN TUBE:DELRIN	80009	343-0254-00
-86	367-0117-00			1	.PULL,SOCKET:CRT,PLASTIC	80009	367-0117-00
-87	200-0917-01			1	.COVER,CRT SKT:2.052 OD X 0.291 H,PLASTIC	80009	200-0917-01
-88	136-0304-03			1	.SKT,PL-IN ELEK:ELECTRON TUBE,14 CONTACT	80009	136-0304-03
	352-0198-01			1	.HLDR,TERM CONN:2 WIRE,BROWN	80009	352-0198-01
	352-0198-02			1	.HLDR,TERM CONN:2 WIRE,RED	80009	352-0198-02
	352-0198-03			1	.HLDR,TERM CONN:2 WIRE,ORANGE	80009	352-0198-03
	352-0203-00			1	.HLDR,TERM CONN:7 WIRE,BLACK	80009	352-0203-00
	352-0206-00			1	.HLDR,TERM CONN:10 WIRE,BLACK	80009	352-0206-00
	343-0549-00			15	.STRAP,TIEDOWN,E:0.091 W X 4.0 L,ZYTEL	06383	PLT1M
-89	211-0504-00			4	SCREW,MACHINE:6-32 X 0.250,PNH,STL	TK0435	ORDER BY DESCR
					(ATTACHING PART TO FIG.1-16 RWPL)		
-90	385-0154-00			4	SPACER,POST:1.296 L W/6-32 THD EA END,AL	80009	385-0154-00
-91	----- -----			1	DELAY LINE,ELEC:65NS,100 OHMS		
					(SEE DL592 REPL)		
					(ATTACHING PARTS)		
-92	211-0507-00			4	SCREW,MACHINE:6-32 X 0.312,PNH,STL	83385	ORDER BY DESCR
					(END ATTACHING PARTS)		
					(DELAY LINE ASSY INCLUDES:		
-93	386-3358-00			1	.PLATE,DLY LINE:BOTTOM	80009	386-3358-00
					.(ATTACHING PARTS)		
-94	213-0041-00			2	.SCREW,TPG,TC:6-32 X 0.375,TYPE T,TRH,STL	93907	ORDER BY DESCR
					.(END ATTACHING PARTS)		
-95	175-1309-00			AR	.CABLE,RF:1.5 NS/FT DLY,100 OHM,	80009	175-1309-00
-96	388-2194-00			1	.CIRCUIT BOARD:DELAY LINE TERMINATION	80009	388-2194-00
					.(ATTACHING PARTS)		
-97	210-0586-00			1	.NUT,PL,ASSEM WA:4-40 X 0.25,STL CD PL	78189	211-041800-00
					.(END ATTACHING PARTS)		
-98	131-1003-00			4	.CONN,RCPT,ELEC:CKT BD MT,3 PRONG	80009	131-1003-00
-99	136-0252-07			4	.SOCKET,PIN CONN:W/O DIMPLE	22526	75060-012
-100	386-3357-00			1	.PLATE,DLY LINE:TOP	80009	386-3357-00
					.(ATTACHING PARTS)		
-101	213-0041-00			2	.SCREW,TPG,TC:6-32 X 0.375,TYPE T,TRH,STL	93907	ORDER BY DESCR
					.(END ATTACHING PARTS)		
-102	129-0325-00			2	.SPACER,SLEEVE:1.215 L X 0.107 ID,ACETAL	80009	129-0325-00
-103	----- -----			1	CIRCUIT BD ASSY:STORAGE		
					(SEE A25 REPL)		
					(ATTACHING PARTS)		
-104	211-0008-00			6	SCREW,MACHINE:4-40 X 0.25,PNH,STL	93907	ORDER BY DESCR
					(END ATTACHING PARTS)		
					CKT BOARD ASSY INCLUDES:		
-105	----- -----			1	.SWITCH,PUSH:1A,28VDC		
					.(SEE A25S2624 REPL)		
-106	----- -----			1	.SWITCH,PUSH:1BUTTON,4 POLE,DISPLAY		
					.(SEE A25S2558 REPL)		
-107	131-0993-00			1	.BUS,CONDUCTOR:SHUNT ASSEMBLY,BLACK	22526	65474-005
-108	136-0252-07			3	.SOCKET,PIN CONN:W/O DIMPLE	22526	75060-012
-109	131-1003-00			3	.CONN,RCPT,ELEC:CKT BD MT,3 PRONG	80009	131-1003-00
-110	361-0382-00			4	.SPACER,PB SW:0.275 L,BROWN POLYCARBONATE	80009	361-0382-00
-111	131-0589-00			92	.TERM,PIN:0.46 L X 0.025 SQ PH BRZ GLD	22526	48283-029
-112	337-2294-00			1	SHIELD,ELEC:HIGH VOLTAGE	80009	337-2294-00
					(ATTACHING PARTS)		
-113	211-0558-00			1	SCREW,MACHINE:6-32 X 0.25,BDGH,NYL	26365	ORDER BY DESCR
					(END ATTACHING PARTS)		
-114	385-0013-00			1	SPACER,POST:0.75 L W/6-32 THD THRU,NYL	80009	385-0013-00
					(ATTACHING PARTS)		
-115	211-0558-00			1	SCREW,MACHINE:6-32 X 0.25,BDGH,NYL	26365	ORDER BY DESCR
					(END ATTACHING PARTS)		

http://manoman.sqhill.com

Fig. & Index No.	Tektronix Part No.	Serial/Assembly No. Effective	Dscont	Qty	12345 Name & Description	Mfr. Code	Mfr. Part No.
2-116	384-1875-00			2	EXTENSION SHAFT:OFFSET,1.235 L	80009	384-1875-00
					EXTENSION SHAFT INCLUDES:		
-117	103-0186-01			2	.ADAPTER,EXT SFT:PUSH SW,0.45 OFFSET	80009	103-0186-01
-118	384-1136-00			2	.EXTENSION SHAFT:0.95 INCH LONG	80009	384-1136-00
-119	366-1559-00			7	PUSH BUTTON:SIL GY,0.18 SQ X 0.43	80009	366-1559-00
-120	210-0202-00			1	TERMINAL,LUG:0.146 ID,LOCKING,BRZ TIN PL	86928	A-373-158-2
					(ATTACHING PARTS)		
-121	211-0507-00			1	SCREW,MACHINE:6-32 X 0.312,PNH,STL	83385	ORDER BY DESCR
					(END ATTACHING PARTS)		
-122	426-1291-00			2	FRAME SECT,CAB.:BOTTOM	80009	426-1291-00
	334-2980-00			1	MARKER,IDENT:WKD CAUTION	80009	334-2980-00

http://manoman.sqhill.com

Fig. & Index No.	Tektronix Part No.	Serial/Assembly No. Effective	Dscont	Qty	12345 Name & Description	Mfr. Code	Mfr. Part No.
3-1	200-1834-01			1	COVER,PWR SPLY:HIGH VOLTAGE	80009	200-1834-01
					(ATTACHING PARTS)		
-2	211-0008-00			4	SCREW,MACHINE:4-40 X 0.25,PNH,STL	93907	ORDER BY DESCR
					(END ATTACHING PARTS)		
-3	----- -----			1	CIRCUIT BD ASSY:FOCUS		
					(SEE A23 REPL)		
					(ATTACHING PARTS)		
-4	211-0008-00			4	SCREW,MACHINE:4-40 X 0.25,PNH,STL	93907	ORDER BY DESCR
					(END ATTACHING PARTS)		
					CIRCUIT BOARD ASSY INCLUDES:		
-5	131-0589-00			27	.TERM,PIN:0.46 L X 0.025 SQ PH BRZ GLD	22526	48283-029
-6	----- -----			1	CIRCUIT BD ASSY:HIGH VOLTAGE		
					(SEE A22 REPL)		
					(ATTACHING PARTS)		
-7	211-0008-00			2	SCREW,MACHINE:4-40 X 0.25,PNH,STL	93907	ORDER BY DESCR
					(END ATTACHING PARTS)		
					CIRCUIT BOARD ASSY INCLUDES:		
-8	----- -----			1	.SEMICOND DVC,DI:HV MULT,SI,4KV PP IN,8KV		
					.OUT		
					.(SEE A22U2012 REPL)		
					.(ATTACHING PARTS)		
-9	220-0796-00			2	.NUT,PLAIN,HEX:8-32 X 0.375 HEX,NYLON	95987	N-832-X
					.(END ATTACHING PARTS)		
-10	131-0589-00			22	.TERM,PIN:0.46 L X 0.025 SQ PH BRZ GLD	22526	48283-029
-11	346-0032-00			1	.STRAP,RETAINING:0.075 DIA X 4.0 L,MLD RBR	98159	2829-75-4
-12	361-0007-00			1	.SPACER,SLEEVE:0.188 L X 0.111 ID,POLTHN	80009	361-0007-00
-13	129-0072-00			1	.INSULATOR,STDF:0.938 L X 0.188	80009	129-0072-00
-14	131-0309-00			1	..TERMINAL,STUD:0.415 L,BIFURCATED	88245	421572-02-9
-15	386-2041-00			2	.SUPPORT,XFMR:	80009	386-2041-00
					.(ATTACHING PARTS)		
-16	211-0008-00			4	.SCREW,MACHINE:4-40 X 0.25,PNH,STL	93907	ORDER BY DESCR
					.(END ATTACHING PARTS)		
-17	337-2270-00			1	SHIELD,ELEC:CIRCUIT BOARD	80009	337-2270-00
					(ATTACHING PARTS)		
-18	211-0558-00			4	SCREW,MACHINE:6-32 X 0.25,BDGH,NYL	26365	ORDER BY DESCR
-19	385-0013-00			2	SPACER,POST:0.75 L W/6-32 THD THRU,NYL	80009	385-0013-00
					(END ATTACHING PARTS)		
-20	----- -----			1	CIRCUIT BD ASSY:Z AXIS		
					(SEE A21 REPL)		
					(ATTACHING PARTS)		
-21	211-0008-00			4	SCREW,MACHINE:4-40 X 0.25,PNH,STL	93907	ORDER BY DESCR
					(END ATTACHING PARTS)		
					CIRCUIT BOARD ASSY INCLUDES:		
-22	131-0589-00			6	.TERM,PIN:0.46 L X 0.025 SQ PH BRZ GLD	22526	48283-029
-23	131-0608-00			29	.TERMINAL,PIN:0.365 L X 0.025 BRZ GLD PL	22526	48283-036
-24	131-1003-00			4	.CONN,RCPT,ELEC:CKT BD MT,3 PRONG	80009	131-1003-00
-25	136-0252-07			88	.SOCKET,PIN CONN:W/O DIMPLE	22526	75060-012
-26	136-0727-00			1	.SKT,PL-IN ELEK:MICROCKT,8 CONTACT	09922	DILB8P-108
-27	343-0853-00			1	CLAMP,LOOP:0.5 DIA,NYLON	34785	021-0500
-28	348-0233-00			1	GROMMET,PLASTIC:GRAY,OBLONG 0.847 X 0.347	80009	348-0233-00
-29	348-0171-00			1	GROMMET,PLASTIC:BLACK,U-SHAPED,0.276 ID	80009	348-0171-00
-30	220-0547-01			6	NUT BLOCK:4-40 X 0.282,NI SIL NP	80009	220-0547-01
					(ATTACHING PARTS)		
-31	211-0007-00			6	SCREW,MACHINE:4-40 X 0.188,PNH,STL	TK0435	ORDER BY DESCR
					(END ATTACHING PARTS)		
-32	352-0087-00			2	HOLDER,IDENT PL:3.5 X 1.844 X 0.094,PS	80009	352-0087-00
-33	380-0450-01			1	HSG,HV PWR SPLY:	80009	380-0450-01
					(ATTACHING PARTS)		
-34	211-0507-00			4	SCREW,MACHINE:6-32 X 0.312,PNH,STL	83385	ORDER BY DESCR
					(END ATTACHING PARTS)		
-35	200-2079-01			1	COVER,PLENUM:ALUMINUM	80009	200-2079-01
					(ATTACHING PARTS)		
-36	211-0507-00			4	SCREW,MACHINE:6-32 X 0.312,PNH,STL	83385	ORDER BY DESCR
					(END ATTACHING PARTS)		
-37	131-1315-01			3	CONN,RCPT,ELEC:BNC,FEMALE	80009	131-1315-01
-38	----- -----			1	RES,FXD,MM:10 OHM,5%,10M		
					(SEE R90 REPL)		

http://manoman.sqhill.com

Fig. & Index No.	Tektronix Part No.	Serial/Assembly No. Effective	Dscont	Qty	12345 Name & Description	Mfr. Code	Mfr. Part No.
3-					(ATTACHING PARTS)		
-39	211-0553-00			1	SCREW,MACHINE:6-32 X 1.5,PNH,STL	TK0435	ORDER BY DESCR
-40	211-0507-00			1	SCREW,MACHINE:6-32 X 0.312,PNH,STL	83385	ORDER BY DESCR
-41	210-0202-00			1	TERMINAL,LUG:0.146 ID,LOCKING,BRZ TIN PL	86928	A-373-158-2
-42	210-0478-00			1	SPACER,POST:0.66 L W/6-32 THD THRU,AL	80009	210-0478-00
-43	210-0601-00			1	EYELET,METALLIC:0.183 OD X 0.192 L,BRASS	18680	77362
					(END ATTACHING PARTS)		
-44	378-0279-00			1	GRILL,FAN:3.125 DIA SQ	80009	378-0279-00
					(ATTACHING PARTS)		
-45	211-0513-00			4	SCREW,MACHINE:6-32 X 0.625,PNH,STL	93907	B80-00032-003
-46	210-0457-00			4	NUT,PL,ASSEM WA:6-32 X 0.312,STL CD PL	78189	511-061800-00
					(END ATTACHING PARTS)		
-47	- --- -----			1	FAN,TUBEAXIAL:12V,4.8W,3450 RPM,35 CFM		
					(SEE B90 REPL)		
-48	386-3976-00			2	SUBPANEL,REAR:UPPER RIGHT	80009	386-3976-00
					(ATTACHING PARTS)		
-49	211-0232-00			4	SCREW,MACHINE:4-40 X 0.25,FILH,STL	TK0435	8005-302
					(END ATTACHING PARTS)		
-50	426-0809-01			1	FRAME SECT,CAB.:REAR	80009	426-0809-01
					(ATTACHING PARTS)		
-51	213-0270-00			3	SCREW,TPG,TF:10-32 X 0.75,SPCL TYPE,FILH	TK1543	234-74658-026
					(END ATTACHING PARTS)		
-52	----- -----			1	CIRCUIT BD ASSY:VERT AMP		
					(SEE A19A1 REPL)		
					(ATTACHING PARTS)		
-53	211-0008-00			4	SCREW,MACHINE:4-40 X 0.25,PNH,STL	93907	ORDER BY DESCR
-54	211-0259-00			2	SCR,ASSEM WSHR:2-56 X 0.437,PNH,STL,POZ	01536	ORDER BY DESCR
					(END ATTACHING PARTS)		
					CIRCUIT BOARD ASSY INCLUDES:		
-55	426-1351-00			2	.FRAME,MICROCKT:1.75 CM	80009	426-1351-00
					.(ATTACHING PARTS)		
-56	211-0260-00			2	.SCR,ASSEM WSHR:2-56 X 0.687,PNH,STL,POZ	01536	ORDER BY DESCR
					.(END ATTACHING PARTS)		
	131-1967-00			2	.CONT SET,ELEC:MICROCKT,1.75 CM,RUBBER	80009	131-1967-00
-57	214-2543-00			1	.HT SK,MICROCKT:MICROCIRCUIT,AL	80009	214-2543-00
-58	----- -----			1	.TRANSISTOR:NPN,SI,X-81		
					.(SEE A19A1Q720 REPL)		
					.(ATTACHING PARTS)		
-59	211-0097-00			1	.SCREW,MACHINE:4-40 X 0.312,PNH,STL	TK0435	ORDER BY DESCR
-60	210-0407-00			1	.NUT,PLAIN,HEX:6-32 X 0.25,BRS CD PL	73743	3038-402
-61	210-0551-00			1	.NUT,PLAIN,HEX:4-40 X 0.25,ST CD PL	TK0435	ORDER BY DESCR
					.(END ATTACHING PARTS)		
-62	131-0608-00			13	.TERMINAL,PIN:0.365 L X 0.025 BRZ GLD PL	22526	48283-036
-63	136-0252-07			3	.SOCKET,PIN CONN:W/O DIMPLE	22526	75060-012
-64	131-1003-00			3	.CONN,RCPT,ELEC:CKT BD MT,3 PRONG	80009	131-1003-00
-65	----- -----			1	CIRCUIT BD ASSY:FLEX CON		
					(SEE A19A2 REPL)		
-66	----- -----			1	CIRCUIT BD ASSY:HORIZ AMP		
					(SEE A20 REPL)		
					(ATTACHING PARTS)		
-67	211-0008-00			4	SCREW,MACHINE:4-40 X 0.25,PNH,STL	93907	ORDER BY DESCR
					(END ATTACHING PARTS)		
					CIRCUIT BOARD ASSY INCLUDES:		
-68	131-0589-00			16	.TERM,PIN:0.46 L X 0.025 SQ PH BRZ GLD	22526	48283-029
-69	136-0252-07			4	.SOCKET,PIN CONN:W/O DIMPLE	22526	75060-012
-70	131-1003-00			4	.CONN,RCPT,ELEC:CKT BD MT,3 PRONG	80009	131-1003-00
-71	----- -----			1	RES,FXD,FILM:(2)175 OHM,(2)33.7 OHM		
					(SEE R83 REPL)		
					(ATTACHING PARTS)		
-72	211-0504-00			2	SCREW,MACHINE:6-32 X 0.250,PNH,STL	TK0435	ORDER BY DESCR
					(END ATTACHING PARTS)		
-73	210-0202-00			1	TERMINAL,LUG:0.146 ID,LOCKING,BRZ TIN PL	86928	A-373-158-2
					(ATTACHING PARTS)		
-74	211-0504-00			1	SCREW,MACHINE:6-32 X 0.250,PNH,STL	TK0435	ORDER BY DESCR
					(END ATTACHING PARTS)		
-75	348-0063-00			1	GROMMET,PLASTIC:GRAY,ROUND,0.0457 ID	80009	348-0063-00
-76	343-0835-00			1	CLAMP,LOOP:0.375 ID,NYLON W/ADH BACK	80009	343-0835-00

http://manoman.sqhill.com

Fig. & Index No.	Tektronix Part No.	Serial/Assembly No. Effective	Dscont	Qty	12345 Name & Description	Mfr. Code	Mfr. Part No.
3-77	407-1690-00			1	BRACKET,CKT BD:ALUMINUM	80009	407-1690-00
					(ATTACHING PARTS)		
-78	211-0507-00			2	SCREW,MACHINE:6-32 X 0.312,PNH,STL	83385	ORDER BY DESCR
					(END ATTACHING PARTS)		
-79	441-1715-00			1	CHASSIS,SCOPE:VERTICAL AMP	80009	441-1715-00
					(ATTACHING PARTS)		
-80	211-0507-00			4	SCREW,MACHINE:6-32 X 0.312,PNH,STL	83385	ORDER BY DESCR
					(END ATTACHING PARTS)		
-81	386-3351-00			1	SUPPORT,CRT:REAR	80009	386-3351-00
					(ATTACHING PARTS)		
-82	211-0510-00			6	SCREW,MACHINE:6-32 X 0.375,PNH,STL	83385	ORDER BY DESCR
-83	210-0949-00			6	WASHER,FLAT:0.141 ID X 0.5 OD X 0.062,BRS	12327	ORDER BY DESCR
					(END ATTACHING PARTS)		
-84	348-0233-00			1	GROMMET,PLASTIC:GRAY,OBLONG 0.847 X 0.347	80009	348-0233-00
-85	386-5340-00			1	SUPPORT,CHASSIS:MAIN,TOP	80009	386-5340-00

http://manoman.sqhill.com

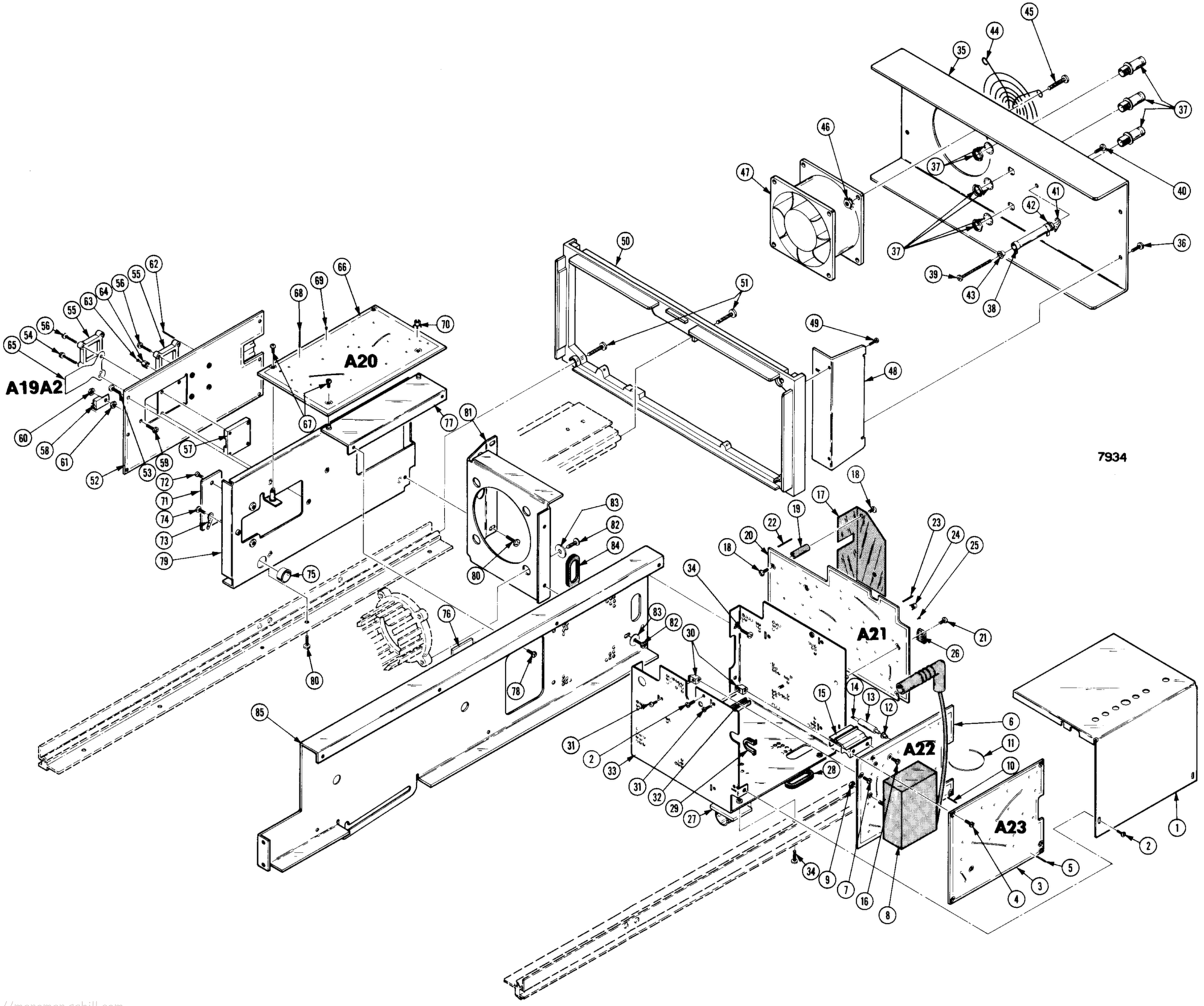

http://manoman.sqhill.com

7934

LOWER UNIT

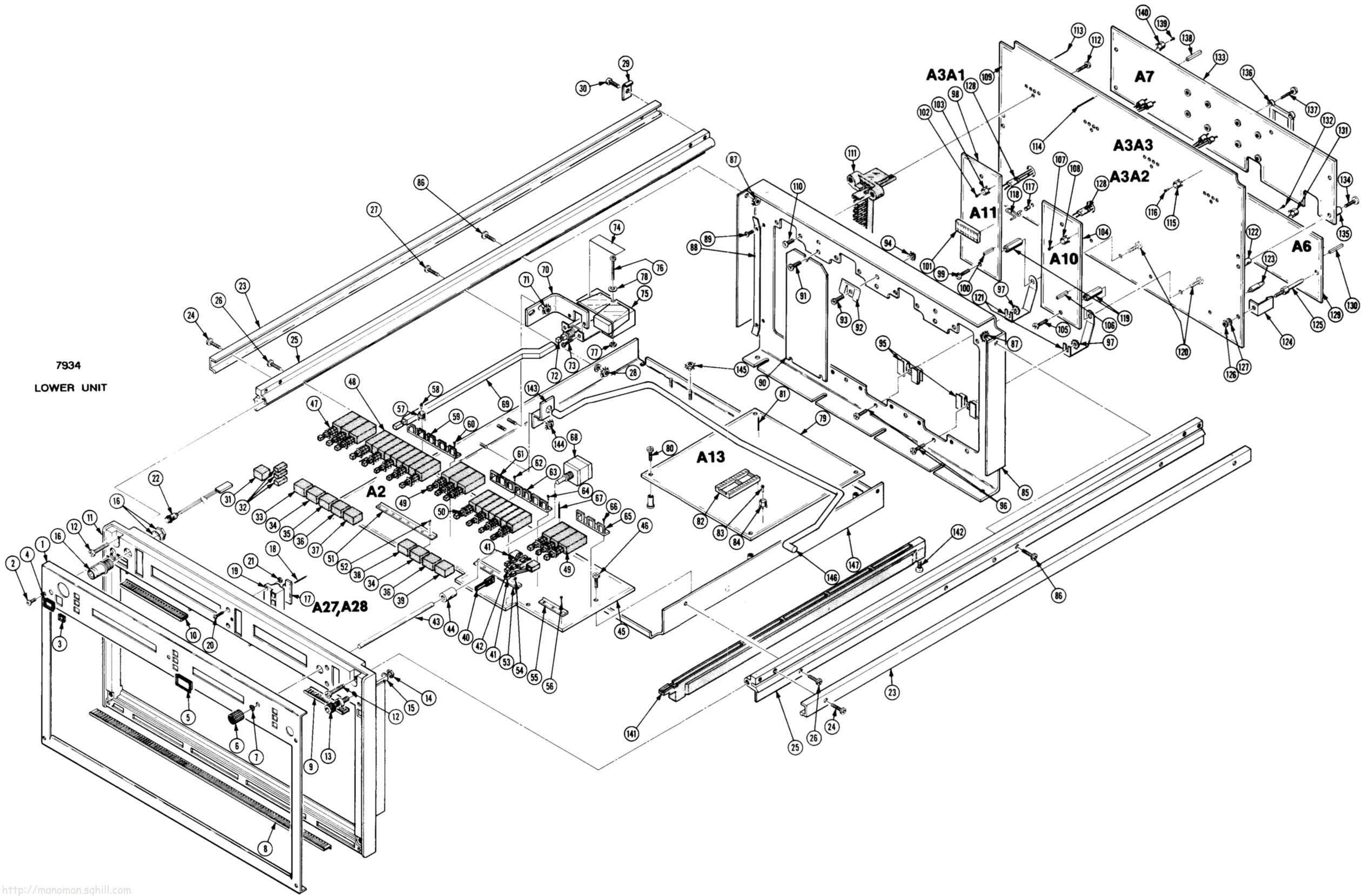

http://manoman.sqhill.com

Fig. & Index No.	Tektronix Part No.	Serial/Assembly No. Effective	Dscont	Qty	12345 Name & Description	Mfr. Code	Mfr. Part No.
4-1	333-2318-00			1	PANEL,FRONT:LOWER	80009	333-2318-00
					(ATTACHING PARTS)		
-2	213-0055-00			5	SCREW,TPG,TF:2-32 X 0.188,TYPE B,PNH,STL	93907	ORDER BY DESCR
					(END ATTACHING PARTS)		
-3	426-1072-00			1	FRAME,PUSH BTN:SILVER GRAY PLSTC	80009	426-1072-00
-4	426-0681-00			1	FRAME,PUSH BTN:	80009	426-0681-00
-5	426-0568-00			9	FRAME,PUSH BTN:	80009	426-0568-00
-6	366-1023-01			1	KNOB:GY,0.127 ID X 0.392 OD X 0.531 H	80009	366-1023-01
-7	358-0599-00			1	BUSHING,SLEEVE:0.125 ID X 0.25 OD X 0.234	28520	B-187-125
-8	348-0204-00			1	SHLD GSKT,ELEK:FINGER TYPE,10.65 L	80009	348-0204-00
-9	337-1542-00			1	SHLD GSKT,ELEK:EMI	80009	337-1542-00
-10	337-1543-00			3	SHLD GSKT,ELEK:EMI	80009	337-1543-00
-11	426-0806-03			1	FRAME PNL,CAB.:LOWER FRONT	80009	426-0806-03
					(ATTACHING PARTS)		
-12	213-0270-00			4	SCREW,TPG,TF:10-32 X 0.75,SPCL TYPE,FILH	TK1543	234-74658-026
					(END ATTACHING PARTS)		
-13	129-0103-00			1	POST,BDG,ELEC:ASSEMBLY	80009	129-0103-00
					(ATTACHING PARTS)		
-14	210-0583-00			1	NUT,PLAIN,HEX:0.25-32 X 0.312,BRS CD PL	73743	2X-20319-402
-15	210-0046-00			1	WASHER,LOCK:0.261 ID,INTL,0.018 THK,STL	77900	1214-05-00-0541C
					(END ATTACHING PARTS)		
-16	131-1315-01			1	CONN,RCPT,ELEC:BNC,FEMALE	80009	131-1315-01
-17	----- -----			2	CIRCUIT BD ASSY:TRIGGER LIGHT		
					(SEE A27,A28 REPL)		
-18	131-0608-00			8	.TERMINAL,PIN:0.365 L X 0.025 BRZ GLD PL	22526	48283-036
-19	351-0509-00			2	GUIDE,PUSH BTN:THREE LAMP	80009	351-0509-00
					(ATTACHING PARTS)		
-20	211-0030-00			4	SCREW,MACHINE:2-56 X 0.25,FLH,82 DEG,STL	TK0435	ORDER BY DESCR
-21	210-0405-00			4	NUT,PLAIN,HEX:2-56 X 0.188,BRS CD PL	73743	12157-50
					(END ATTACHING PARTS)		
-22	----- -----			1	LAMP,CARTRIDGE:5V,0.06A,GREEN,4.125 L,5-N		
					(FROM DS365 TO A2J365)		
-23	426-0849-02			2	FRAME SECT,CAB.:COUPLING	80009	426-0849-02
					(ATTACHING PARTS)		
-24	211-0507-00			4	SCREW,MACHINE:6-32 X 0.312,PNH,STL	83385	ORDER BY DESCR
					(END ATTACHING PARTS)		
-25	426-1513-00			2	FRAME SECT,CAB.:TOP RIGHT	80009	426-1513-00
					(ATTACHING PARTS)		
-26	211-0507-00			4	SCREW,MACHINE:6-32 X 0.312,PNH,STL	83385	ORDER BY DESCR
-27	211-0510-00			1	SCREW,MACHINE:6-32 X 0.375,PNH,STL	83385	ORDER BY DESCR
-28	210-0457-00			1	NUT,PL,ASSEM WA:6-32 X 0.312,STL CD PL	78189	511-061800-00
					(END ATTACHING PARTS)		
-29	407-2093-00			2	BRACKET,ANGLE:HINGE,ALUMINUM	80009	407-2093-00
					(ATTACHING PARTS)		
-30	211-0538-00			2	SCREW,MACHINE:6-32 X 0.312,FLH,100 DEG	93907	ORDER BY DESCR
					(END ATTACHING PARTS)		
-31	366-1480-02			1	PUSH BUTTON:BLACK,PWR OFF	80009	366-1480-02
-32	366-1559-00			3	PUSH BUTTON:SIL GY,0.18 SQ X 0.43	80009	366-1559-00
-33	366-1161-57			1	PUSH BUTTON:SIL GY,LEFT	80009	366-1161-57
-34	366-1161-31			2	PUSH BUTTON:SIL GY,ALT	80009	366-1161-31
-35	366-1161-27			1	PUSH BUTTON:SIL GY,ADD	80009	366-1161-27
-36	366-1161-30			2	PUSH BUTTON:SIL GY,CHOP	80009	366-1161-30
-37	366-1161-58			1	PUSH BUTTON:SIL GY,RIGHT	80009	366-1161-58
-38	366-1161-55			1	PUSH BUTTON:SIL GY,A	80009	366-1161-55
-39	366-1161-56			1	PUSH BUTTON:SIL,GY,B	80009	366-1161-56
-40	366-1650-00			6	PUSH BUTTON:CLEAR,0.184 X 0.214 X 8.0	80009	366-1650-00
-41	384-1354-00			6	EXTENSION SHAFT:1.585 L,OFFSET,NYLON	80009	384-1354-00
-42	384-1136-00			12	EXTENSION SHAFT:0.95 INCH LONG	80009	384-1136-00
-43	384-1148-00			1	EXTENSION SHAFT:3.14 L X 0.123 OD,EPOXY GL	80009	384-1148-00
-44	376-0029-00			1	CPLG,SHAFT,RGD:0.128 ID X 0.312 OD,AL	80009	376-0029-00
	213-0075-00			2	.SETSCREW:4-40 X 0.094,STL	74445	ORDER BY DESCR
-45	----- -----			1	CIRCUIT BD ASSY:CALIBRATOR AND MODE SWITCH		
					(SEE A2 REPL)		
					(ATTACHING PARTS)		
-46	211-0008-00			5	SCREW,MACHINE:4-40 X 0.25,PNH,STL	93907	ORDER BY DESCR
					(END ATTACHING PARTS)		
					CKT BOARD ASSY INCLUDES:		

http://manoman.sqhill.com

Fig. & Index No.	Tektronix Part No.	Serial/Assembly No. Effective	Dscont	Qty	12345 Name & Description	Mfr. Code	Mfr. Part No.
4-47	----- -----			1	.SWITCH PB ASSY:3 LATCH,10MM,5 CONTACT .(SEE A2S395 REPL)		
-48	----- -----			1	.SWITCH PB ASSY:5 LATCH,7.5MM,5 CONT,4 FR .(SEE A2S344 REPL)		
-49	----- -----			2	.SWITCH PB ASSY:3 LATCH,10 MM,M/3 CONTACTS .(SEE A2S352,S354 REPL)		
-50	----- -----			1	.SWITCH PB ASSY:4 LATCH,7.5MM,6 CONT,3 FR .(SEE A2S342 REPL)		
-51	343-0495-09			1	.CLIP,SWITCH:FRONT,7.5MM X 9 UNIT .(ATTACHING PARTS)	80009	343-0495-09
-52	210-3033-00			8	.EYELET,METALLIC:0.059 OD X 0.156 L,BRS .(END ATTACHING PARTS)	07707	SE-25
-53	343-0495-07			1	.CLIP,SWITCH:FRONT,7.5MM X 7 UNIT .(ATTACHING PARTS)	80009	343-0495-07
-54	210-3033-00			7	.EYELET,METALLIC:0.059 OD X 0.156 L,BRS .(END ATTACHING PARTS)	07707	SE-25
-55	343-0496-03			3	.CLIP,SWITCH:FRONT,10MM X 3 UNIT .(ATTACHING PARTS)	80009	343-0496-03
-56	210-3033-00			9	.EYELET,METALLIC:0.059 OD X 0.156 L,BRS .(END ATTACHING PARTS)	07707	SE-25
-57	131-1003-00			1	.CONN,RCPT,ELEC:CKT BD MT,3 PRONG	80009	131-1003-00
-58	136-0252-07			1	.SOCKET,PIN CONN:M/O DIMPLE	22526	75060-012
-59	343-0499-14			1	.CLIP,SWITCH:7.5MM X 5 UNIT .(ATTACHING PARTS)	80009	343-0499-14
-60	210-3033-00			5	.EYELET,METALLIC:0.059 OD X 0.156 L,BRS .(END ATTACHING PARTS)	07707	SE-25
-61	343-0499-12			1	.CLIP,SWITCH:FRONT,7.5MM X 3 UNIT .(ATTACHING PARTS)	80009	343-0499-12
-62	210-3033-00			3	.EYELET,METALLIC:0.059 OD X 0.156 L,BRS .(END ATTACHING PARTS)	07707	SE-25
-63	343-0499-13			2	.CLIP,SWITCH:7.5MM X 4 UNIT .(ATTACHING PARTS)	80009	343-0499-13
-64	210-3033-00			8	.EYELET,METALLIC:0.059 OD X 0.156 L,BRS .(END ATTACHING PARTS)	07707	SE-25
-65	343-0497-03			3	.CLIP,SWITCH:REAR,10MM X 3 UNIT .(ATTACHING PARTS)	80009	343-0497-03
-66	210-3033-00			9	.EYELET,METALLIC:0.059 OD X 0.156 L,BRS .(END ATTACHING PARTS)	07707	SE-25
-67	131-0589-00			54	.TERM,PIN:0.46 L X 0.025 SQ PH BRZ GLD	22526	48283-029
-68	----- -----			1	.RES,VAR,NONWW:PNL,5K OHM,1W .(SEE A2R345 REPL)		
-69	384-1876-01			1	EXTENSION SHAFT:	80009	384-1876-01
-70	407-1873-00			1	BRACKET,ANGLE:POWER SWITCH,ALUMINUM (ATTACHING PARTS)	80009	407-1873-00
-71	210-0457-00			2	NUT,PL,ASSEM WA:6-32 X 0.312,STL CD PL (END ATTACHING PARTS)	78189	511-061800-00
-72	----- -----			1	SWITCH,PUSH:DPST,15A,250VAC,PUSH-PUSH (SEE S10 REPL) (ATTACHING PARTS)		
-73	211-0008-00			2	SCREW,MACHINE:4-40 X 0.25,PNH,STL (END ATTACHING PARTS)	93907	ORDER BY DESCR
-74	334-2332-00			1	MARKER,IDENT:DANGER:VOLTAGE IN THIS AREA	80009	334-2332-00
-75	200-1731-00			1	COVER,ELEC SW:1.9 X 1.0 X 0.45 CLR PLSTC (ATTACHING PARTS)	80009	200-1731-00
-76	211-0034-00			1	SCREW,MACHINE:2-56 X 0.5,PNH,STL	06950	ORDER BY DESCR
-77	210-0405-00			1	NUT,PLAIN,HEX:2-56 X 0.188,BRS CD PL	73743	12157-50
-78	210-0850-00			1	WSHR,FLAT:0.093 ID X 0.281 OD X 0.02,STL (END ATTACHING PARTS)	12327	ORDER BY DESCR
-79	----- -----			1	CIRCUIT BD ASSY:READOUT (SEE A13 REPL) (ATTACHING PARTS)		
-80	211-0008-00			4	SCREW,MACHINE:4-40 X 0.25,PNH,STL (END ATTACHING PARTS) CKT BOARD ASSY INCLUDES:	93907	ORDER BY DESCR
-81	131-0589-00			27	.TERM,PIN:0.46 L X 0.025 SQ PH BRZ GLD	22526	48283-029
-82	136-0751-00			1	.SKT,PL-IN ELEK:MICROCKT,24 PIN	09922	DILB24P108
-83	136-0252-07			5	.SOCKET,PIN CONN:M/O DIMPLE	22526	75060-012

http://manoman.sqhill.com

Fig. & Index No.	Tektronix Part No.	Serial/Assembly No. Effective	Dscont	Qty	12345 Name & Description	Mfr. Code	Mfr. Part No.
4-84	131-1003-00			5	.CONN,RCPT,ELEC:CKT BD MT,3 PRONG	80009	131-1003-00
-85	426-1487-00			1	FRAME,PL-IN HSG:REAR	80009	426-1487-00
					(ATTACHING PARTS)		
-86	211-0507-00			2	SCREW,MACHINE:6-32 X 0.312,PNH,STL	83385	ORDER BY DESCR
-87	210-0457-00			2	NUT,PL,ASSEM WA:6-32 X 0.312,STL CD PL	78189	511-061800-00
					(END ATTACHING PARTS)		
-88	131-0800-03			2	CONTACT,ELEC:PLUG-IN GND,BE NI HT TR	80009	131-0800-03
					(ATTACHING PARTS)		
-89	213-0138-00			4	SCREW,TPG,TF:4-24 X 0.188,TYPE B,PNH,STL	TK0435	ORDER BY DESCR
					(END ATTACHING PARTS)		
-90	337-2514-00			3	SHIELD,ELEC:INTERFACE CIRCUIT BOARD	80009	337-2514-00
					(ATTACHING PARTS)		
-91	211-0008-00			9	SCREW,MACHINE:4-40 X 0.25,PNH,STL	93907	ORDER BY DESCR
					(END ATTACHING PARTS)		
-92	131-0799-00			3	CONTACT,ELEC:PLUG-IN GND,BE NI CD PL	80009	131-0799-00
					(ATTACHING PARTS)		
-93	211-0008-00			3	SCREW,MACHINE:4-40 X 0.25,PNH,STL	93907	ORDER BY DESCR
-94	210-0586-00			3	NUT,PL,ASSEM WA:4-40 X 0.25,STL CD PL	78189	211-041800-00
					(END ATTACHING PARTS)		
-95	131-0930-00			3	CONTACT,ELEC:PLUG-IN GND,CU BE HEAT TRTD	80009	131-0930-00
					(ATTACHING PARTS)		
-96	211-0008-00			3	SCREW,MACHINE:4-40 X 0.25,PNH,STL	93907	ORDER BY DESCR
-97	210-0586-00			3	NUT,PL,ASSEM WA:4-40 X 0.25,STL CD PL	78189	211-041800-00
					(END ATTACHING PARTS)		
-98	----- -----			1	CIRCUIT BD ASSY:HORIZONTAL INTERFACE		
					(SEE A11 REPL)		
					(ATTACHING PARTS)		
-99	211-0008-00			2	SCREW,MACHINE:4-40 X 0.25,PNH,STL	93907	ORDER BY DESCR
					(END ATTACHING PARTS)		
					CKT BOARD ASSY INCLUDES:		
-100	136-0263-07			5	.SOCKET,PIN TERM:U/W 0.025 SQ PIN	22526	ORDER BY DESCR
-101	136-0729-00			1	.SKT,PL-IN ELEK:MICROCKT,16 CONTACT	09922	DILB16P-108T
-102	136-0252-07			6	.SOCKET,PIN CONN:W/O DIMPLE	22526	75060-012
-103	131-1003-00			6	.CONN,RCPT,ELEC:CKT BD MT,3 PRONG	80009	131-1003-00
-104	----- -----			1	CIRCUIT BD ASSY:HORIZONTAL INTERCONNECT		
					(SEE A10 REPL)		
					(ATTACHING PARTS)		
-105	211-0008-00			2	SCREW,MACHINE:4-40 X 0.25,PNH,STL	93907	ORDER BY DESCR
					(END ATTACHING PARTS)		
					CKT BOARD ASSY INCLUDES:		
-106	136-0263-07			8	.SOCKET,PIN TERM:U/W 0.025 SQ PIN	22526	ORDER BY DESCR
-107	136-0252-07			4	.SOCKET,PIN CONN:W/O DIMPLE	22526	75060-012
-108	131-1003-00			4	.CONN,RCPT,ELEC:CKT BD MT,3 PRONG	80009	131-1003-00
-109	----- -----			1	CIRCUIT BD ASSY:MAIN INTERFACE		
					(SEE A3A3 REPL)		
					(ATTACHING PARTS)		
-110	213-0119-00			12	SCREW,TPG,TF:4-24 X 0.375,TYPE B,PNH,STL	83385	ORDER BY DESCR
					(END ATTACHING PARTS)		
					CKT BOARD ASSY INCLUDES:		
-111	131-0767-10			2	.CONN,RCPT,ELEC:CKT BD,38/76 CONTACT	80009	131-0767-10
					.(ATTACHING PARTS)		
-112	213-0232-00			8	.SCREW,TPG,TF:2-32 X 0.312,TYPE B,PNN,STL	01536	ORDER BY DESCR
					.(END ATTACHING PARTS)		
					.CONNECTOR ASSY INCLUDES:		
	200-0950-00			2	..SHLD,ELEC CONN:PLUG-IN CKT BD,PLASTIC	80009	200-0950-00
	204-0365-00			1	..CONN BODY,RCPT:PLUG-IN CIRCUIT BOARD	80009	204-0365-00
	213-0232-00			48	..SCREW,TPG,TF:2-32 X 0.312,TYPE B,PNN,STL	01536	ORDER BY DESCR
	131-0767-07			2	.CONN,RCPT,ELEC:CKT BD,70 CONTACT	80009	131-0767-07
	131-2158-01			70	..CONTACT,ELEC:CKT BD CONN,PH BRZ GOLD PL	80009	131-2158-01
					..190 CONTACT		
	200-0950-00			2	..SHLD,ELEC CONN:PLUG-IN CKT BD,PLASTIC	80009	200-0950-00
	204-0365-02			1	..CONN BODY,RCPT:PLUG-IN CIRCUIT BOARD	80009	204-0365-02
-113	131-0591-00			51	.TERMINAL,PIN:0.835 L X 0.025 SQ PH	80009	131-0591-00
-114	131-0592-00			13	.TERMINAL,PIN:0.885L X 0.025SQ BRS TIN PL	80009	131-0592-00
-115	131-1003-00			16	.CONN,RCPT,ELEC:CKT BD MT,3 PRONG	80009	131-1003-00
-116	136-0252-07			16	.SOCKET,PIN CONN:W/O DIMPLE	22526	75060-012
-117	136-0619-00			2	.SOCKET,PIN TERM:U/W 0.026-0.029 DIA PINS	00779	1-331677-0

http://manoman.sqhill.com

Fig. & Index No.	Tektronix Part No.	Serial/Assembly No. Effective	Dscont	Qty	12345 Name & Description	Mfr. Code	Mfr. Part No.
4-118	214-2675-00			2	.SPRING,CKT BD:	80009	214-2675-00
-119	129-0308-00			4	.SPACER,POST:0.465 L,4-40 THRU,BRS,CU SN	80009	129-0308-00
					.ZN PL,0.25 HEX		
					.(ATTACHING PARTS)		
-120	211-0008-00			4	.SCREW,MACHINE:4-40 X 0.25,PNH,STL	93907	ORDER BY DESCR
					.(END ATTACHING PARTS)		
-121	131-0804-00			2	.BUS,CONDUCTOR:J-SHAPE,0.01 X 1.17 X 0.82 X	80009	131-0804-00
					. 0.312 OA BRS ALBALOY PL		
-122	351-0188-00			3	.POST,CKT BD MTG:0.65 INCH LONG	80009	351-0188-00
-123	386-1558-00			4	.SPACER,CKT BD:0.335 H,ACETAL	80009	386-1558-00
-124	344-0147-00			2	.CLIP,CIRCUIT BD:ACETAL	80009	344-0147-00
					.(ATTACHING PARTS)		
-125	214-1568-00			2	.PIN,GUIDE:0.119 DIA X 1.035 W/0.25 HEX CLR	80009	214-1568-00
-126	210-0406-00			2	.NUT,PLAIN,HEX:4-40 X 0.188,BRS CD PL	73743	12161-50
-127	210-0054-00			2	.WASHER,LOCK:#4 SPLIT,0.025 THK STL	78189	ORDER BY DESCR
					.(END ATTACHING PARTS)		
-128	----- -----			2	CIRCUIT BD ASSY:FRONT PANEL DISPLAY		
					(SEE A3A1,A3A2 REPL)		
-129	----- -----			1	CIRCUIT BD ASSY:LOGIC		
					(SEE A6 REPL)		
-130	136-0263-07			44	.SOCKET,PIN TERM:U/W 0.025 SQ PIN	22526	ORDER BY DESCR
-131	131-1003-00			2	.CONN,RCPT,ELEC:CKT BD MT,3 PRONG	80009	131-1003-00
-132	136-0252-07			2	.SOCKET,PIN CONN:W/O DIMPLE	22526	75060-012
-133	----- -----			1	CIRCUIT BD ASSY:TRIGGER SELECT		
					(SEE A7 REPL)		
					(ATTACHING PARTS)		
-134	211-0155-00			3	.SCREW,EXT RLV:4-40 X 0.375,PNH,SST,POZ	80009	211-0155-00
					.(END ATTACHING PARTS)		
					.CKT BOARD ASSY INCLUDES:		
-135	361-0238-00			3	.SPACER,POST:0.433 L,0.25 OD	80009	361-0238-00
-136	426-1352-00			2	.FRAME,MICROCKT:1.75 CW,STEPPED	80009	426-1352-00
	131-1968-01			2	.CONT SET,ELEC:MICROCKT,1.75 CW,RUBBER	80009	131-1968-01
					.(ATTACHING PARTS)		
-137	211-0259-00			8	.SCR,ASSEM WSHR:2-56 X 0.437,PNH,STL,POZ	01536	ORDER BY DESCR
					.(END ATTACHING PARTS)		
-138	136-0263-07			7	.SOCKET,PIN TERM:U/W 0.025 SQ PIN	22526	ORDER BY DESCR
-139	136-0252-07			15	.SOCKET,PIN CONN:W/O DIMPLE	22526	75060-012
-140	131-1003-00			9	.CONN,RCPT,ELEC:CKT BD MT,3 PRONG	80009	131-1003-00
-141	351-0181-06			4	GUIDE,SLIDE:PLUG-IN UNIT,LWR,BLK NYLON	80009	351-0181-06
					(ATTACHING PARTS)		
-142	213-0146-00			4	SCREW,TPG,TF:6-20 X 0.312,TYPE B,PNH,STL	83385	ORDER BY DESCR
					(END ATTACHING PARTS)		
-143	407-2109-00			2	BRACKET,HINGE:ALUMINUM	80009	407-2109-00
					(ATTACHING PARTS)		
-144	210-0457-00			2	NUT,PL,ASSEM WA:6-32 X 0.312,STL CD PL	78189	511-061800-00
					(END ATTACHING PARTS)		
-145	210-0457-00			1	NUT,PL,ASSEM WA:6-32 X 0.312,STL CD PL	78189	511-061800-00
					(ATTACHES 6-5 GND LEAD)		
-146	348-0193-00			1	FLIP-STAND,CAB.:3.438 H,SST	80009	348-0193-00
-147	441-1716-00			1	CHASSIS,PLUG-IN:	80009	441-1716-00

http://manoman.sqhill.com

Fig. & Index No.	Tektronix Part No.	Serial/Assembly No. Effective	Dscont	Qty	12345 Name & Description	Mfr. Code	Mfr. Part No.
5-	620-0283-02			1	POWER SUPPLY:	80009	620-0283-02
					(ATTACHING PARTS)		
-1	211-0578-00			4	SCREW,MACHINE:6-32 X 0.438,PNH,STL	TK0435	ORDER BY DESCR
					(END ATTACHING PARTS)		
					POWER SUPPLY ASSY INCLUDES:		
-2	200-1262-02			1	.COVER,PWR SPLY:LEFT SIDE	80009	200-1262-02
					.(ATTACHING PARTS)		
-3	211-0503-00			6	.SCREW,MACHINE:6-32 X 0.188,PNH,STL	TK0435	ORDER BY DESCR
-4	211-0504-00			2	.SCREW,MACHINE:6-32 X 0.250,PNH,STL	TK0435	ORDER BY DESCR
					.(END ATTACHING PARTS)		
-5	200-1263-01			1	.COVER,PWR SPLY:RIGHT SIDE	80009	200-1263-01
					.(ATTACHING PARTS)		
-6	211-0503-00			5	.SCREW,MACHINE:6-32 X 0.188,PNH,STL	TK0435	ORDER BY DESCR
-7	211-0507-00			2	.SCREW,MACHINE:6-32 X 0.312,PNH,STL	83385	ORDER BY DESCR
					.(END ATTACHING PARTS)		
-8	255-0334-00			AR	.PLASTIC CHANNEL:12.75 X 0.175 X 0.155	11897	122-37-2500
-9	348-0233-00			1	.GROMMET,PLASTIC:GRAY,OBLONG 0.847 X 0.347	80009	348-0233-00
-10	351-0279-00			2	.GUIDE,SHOE:5.18 X 0.375,NYLON	80009	351-0279-00
-11	200-1906-00			1	.COVER,PWR SPLY:BOTTOM & FRONT	80009	200-1906-00
					.(ATTACHING PARTS)		
-12	211-0503-00			2	.SCREW,MACHINE:6-32 X 0.188,PNH,STL	TK0435	ORDER BY DESCR
					.(END ATTACHING PARTS)		
-13	----- -----			2	.TRANSISTOR:NPN,SI,TO-220		
					.(SEE A14A2Q28,Q74 REPL)		
					.(ATTACHING PARTS)		
-14	210-0406-00			2	.NUT,PLAIN,HEX:4-40 X 0.188,BRS CD PL	73743	12161-50
-15	211-0101-00			2	.SCREW,MACHINE:4-40 X 0.25,FLH,100 DG,STL	TK0435	ORDER BY DESCR
-16	210-1178-00			2	.WASHER,SHLDR:	13103	7721-7PPS
					.(END ATTACHING PARTS)		
-17	----- -----			2	.TRANSISTOR:PNP,SI,TO-220		
					.(SEE A14A2Q58,Q94 REPL)		
					.(ATTACHING PARTS)		
-18	210-0406-00			2	.NUT,PLAIN,HEX:4-40 X 0.188,BRS CD PL	73743	12161-50
-19	211-0101-00			2	.SCREW,MACHINE:4-40 X 0.25,FLH,100 DG,STL	TK0435	ORDER BY DESCR
-20	210-1178-00			2	.WASHER,SHLDR:	13103	7721-7PPS
					.(END ATTACHING PARTS)		
-21	342-0202-00			5	.INSULATOR,PLATE:TRANSISTOR,MICA	91500	10-21-023-106
-22	----- -----			1	.TRANSISTOR:NPN,SI,SELECTED,TO-127		
					.(SEE A14A2Q122 REPL)		
					.(ATTACHING PARTS)		
-23	210-0406-00			1	.NUT,PLAIN,HEX:4-40 X 0.188,BRS CD PL	73743	12161-50
-24	211-0038-00			1	.SCREW,MACHINE:4-40 X 0.312,FLH,100 DEG	TK0435	ORDER BY DESCR
-25	210-1178-00			1	.WASHER,SHLDR:	13103	7721-7PPS
					.(END ATTACHING PARTS)		
-26	----- -----			1	.TRANSISTOR:SCREENED		
					.(SEE A14A2Q126 REPL)		
					.(ATTACHING PARTS)		
-27	210-0406-00			1	.NUT,PLAIN,HEX:4-40 X 0.188,BRS CD PL	73743	12161-50
-28	211-0101-00			1	.SCREW,MACHINE:4-40 X 0.25,FLH,100 DG,STL	TK0435	ORDER BY DESCR
-29	210-1178-00			1	.WASHER,SHLDR:	13103	7721-7PPS
					.(END ATTACHING PARTS)		
-30	342-0311-00			1	.INSULATOR,PLATE:TRANSISTOR,MICA	01295	64-21-023-212
-31	----- -----			1	.CIRCUIT BD ASSY:LOW VOLTAGE REGULATOR		
					.(SEE A14A2 REPL)		
					.(ATTACHING PARTS)		
-32	211-0008-00			5	.SCREW,MACHINE:4-40 X 0.25,PNH,STL	93907	ORDER BY DESCR
					.(END ATTACHING PARTS)		
					.CKT BOARD ASSY INCLUDES:		
-33	131-0589-00			18	..TERM,PIN:0.46 L X 0.025 SQ PH BRZ GLD	22526	48283-029
-34	214-0579-00			6	..TERM,TEST POINT:BRS CD PL	80009	214-0579-00
-35	136-0252-07			24	..SOCKET,PIN CONN:W/O DIMPLE	22526	75060-012
-36	136-0727-00			5	..SKT,PL-IN ELEK:MICROCKT,8 CONTACT	09922	DILB8P-108
-37	131-0993-00			1	..BUS,CONDUCTOR:SHUNT ASSEMBLY,BLACK	22526	65474-005
-38	131-0608-00			51	..TERMINAL,PIN:0.365 L X 0.025 BRZ GLD PL	22526	48283-036
-39	----- -----			1	..TRANSISTOR:PNP,SI,TO-127		
					..(SEE A14A2Q148 REPL)		
					..(ATTACHING PARTS)		

http://manoman.sqhill.com

Fig. & Index No.	Tektronix Part No.	Serial/Assembly No. Effective	Dscont	Qty	12345 Name & Description	Mfr. Code	Mfr. Part No.
5-40	211-0097-00			1	..SCREW,MACHINE:4-40 X 0.312,PNH,STL	TK0435	ORDER BY DESCR
-41	210-0551-00			1	..NUT,PLAIN,HEX:4-40 X 0.25,ST CD PL	TK0435	ORDER BY DESCR
-42	210-1178-00			1	..WASHER,SHLDR:	13103	7721-7PPS
					..(END ATTACHING PARTS)		
-43	348-0023-00			1	.PLUG,HOLE:U/NO.14 DIA HOLE,WHT PLSTC	02768	207090201000101
-44	441-1490-00			1	.CHASSIS,SCOPE:CIRCUIT BOARD	80009	441-1490-00
					.(ATTACHING PARTS)		
-45	211-0008-00			2	.SCREW,MACHINE:4-40 X 0.25,PNH,STL	93907	ORDER BY DESCR
-46	211-0507-00			3	.SCREW,MACHINE:6-32 X 0.312,PNH,STL	83385	ORDER BY DESCR
					.(END ATTACHING PARTS)		
-47	- --- -----			1	.CIRCUIT BD ASSY:CONTROLLED RECTIFIER		
					.(SEE A14A1 REPL)		
					.(ATTACHING PARTS)		
-48	211-0008-00			3	.SCREW,MACHINE:4-40 X 0.25,PNH,STL	93907	ORDER BY DESCR
-49	211-0504-00			1	.SCREW,MACHINE:6-32 X 0.250,PNH,STL	TK0435	ORDER BY DESCR
					.(END ATTACHING PARTS)		
					.CKT BOARD ASSY INCLUDES;		
-50	136-0252-07			6	..SOCKET,PIN CONN:W/O DIMPLE	22526	75060-012
-51	136-0729-00			1	..SKT,PL-IN ELEK:MICROCKT,16 CONTACT	09922	DILB16P-108T
-52	136-0263-07			4	..SOCKET,PIN TERM:U/M 0.025 SQ PIN	22526	ORDER BY DESCR
-53	----- -----			4	..SEMICOND DVC,DI:RECT,SI,500V,12A		
					..(SEE A14A1CR140,CR141,CR142,CR143 REPL)		
					..(ATTACHING PARTS)		
-54	210-0410-00			4	..NUT,PLAIN,HEX:10-32 X 0.312,BRS CD PL	73743	2X-2003-402
-55	210-0056-00			4	..WASHER,LOCK:#10 SPLIT,0.047 THK,SI BRZ	86928	ORDER BY DESCR
-56	210-1003-00			4	..WASHER,FLAT:0.2 ID X 0.438 OD X 0.036 BRS	86928	5714-50-32N
					..(END ATTACHING PARTS)		
-57	386-1559-00			2	..SPACER,CKT BD:0.47 H,ACETAL	80009	386-1559-00
-58	----- -----			1	..SEMICOND DVC,DI:DUAL RECT,SI,30A,20V,TO-3		
					..(SEE A14A1CR151 REPL)		
					..(ATTACHING PARTS)		
-59	211-0012-00			2	..SCREW,MACHINE:4-40 X 0.375,PNH,STL	TK0435	ORDER BY DESCR
-60	210-0586-00			2	..NUT,PL,ASSEM WA:4-40 X 0.25,STL CD PL	78189	211-041800-00
					..(END ATTACHING PARTS)		
-61	342-0567-00			1	..INSULATOR,PLATE:TRANSISTOR,SI,RUBBER	18565	60-11-4511-167
-62	214-2731-00			1	..HEAT SINK,DIODE:TO-3,AL	80009	214-2731-00
-63	290-0628-00			2	CAP,FXD,ELCTLT:9500UF,+50-10%,200V	56289	36D7560
					.(SEE C16,C17 REPL)		
					.(ATTACHING PARTS)		
-64	212-0518-00			4	.SCREW,MACHINE:10-32 X 0.312,PNH,STL	TK0435	ORDER BY DESCR
-65	212-0651-00			4	.SCREW,MACHINE:10-32 X 0.312 L,PNH,NYLON	TK1281	011032P031
					.(END ATTACHING PARTS)		
-66	342-0419-00			2	.INSULATOR,CAP.:	80009	342-0419-00
-67	407-2111-00			1	.BRACKET,CAP.:ALUMINUM	80009	407-2111-00
-68	----- -----			1	.XFMR,PWR,STPDN:HIGH FREQUENCY		
					.(SEE T110 REPL)		
					.(ATTACHING PARTS)		
-69	211-0008-00			4	.SCREW,MACHINE:4-40 X 0.25,PNH,STL	93907	ORDER BY DESCR
					.(END ATTACHING PARTS)		
-70	348-0023-00			1	.PLUG,HOLE:U/NO.14 DIA HOLE,WHT PLSTC	02768	207090201000101
-71	441-1423-00			1	.CHASSIS,SCOPE:TRANSFORMER	80009	441-1423-00
					.(ATTACHING PARTS)		
-72	211-0097-00			2	.SCREW,MACHINE:4-40 X 0.312,PNH,STL	TK0435	ORDER BY DESCR
					.(END ATTACHING PARTS)		
-73	337-1490-02			1	.SHIELD,ELEC:LINE INVERTER,CKT BD BOTTOM	80009	337-1490-02
					.SAFETY CONTROLLED		
					.(ATTACHING PARTS)		
-74	211-0558-00			1	.SCREW,MACHINE:6-32 X 0.25,BDGH,NYL	26365	ORDER BY DESCR
-75	210-0055-00			1	.WASHER,LOCK:#6 SPLIT,0.031 THK,STL	81350	ORDER BY DESCR
-76	211-0040-00			1	.SCREW,MACHINE:4-40 X 0.25,BDGH,NYL	26365	ORDER BY DESCR
-77	210-0054-00			1	.WASHER,LOCK:#4 SPLIT,0.025 THK STL	78189	ORDER BY DESCR
					.(END ATTACHING PARTS)		
-78	220-0623-00			1	.NUT BLOCK:6-32 X 0.375 X 0.5 X 0.448	80009	220-0623-00
					.(ATTACHING PARTS)		
-79	211-0503-00			1	.SCREW,MACHINE:6-32 X 0.188,PNH,STL	TK0435	ORDER BY DESCR
-80	- ---- -----			1	.CIRCUIT BD ASSY:INVERTER		
					.(SEE A14A3 REPL)		

http://manoman.sqhill.com

Fig. & Index No.	Tektronix Part No.	Serial/Assembly No. Effective	Dscont	Qty	12345 Name & Description	Mfr. Code	Mfr. Part No.
5-					.(ATTACHING PARTS)		
-81	211-0008-00			4	.SCREW,MACHINE:4-40 X 0.25,PNH,STL	93907	ORDER BY DESCR
-82	211-0504-00			2	.SCREW,MACHINE:6-32 X 0.250,PNH,STL	TK0435	ORDER BY DESCR
					.(END ATTACHING PARTS)		
					.CKT BOARD ASSY INCLUDES:		
-83	131-0591-00			6	..TERMINAL,PIN:0.835 L X 0.025 SQ PH	80009	131-0591-00
-84	214-0579-00			4	..TERM,TEST POINT:BRS CD PL	80009	214-0579-00
-85	214-1914-00			1	..HEAT SINK,DIODE:(2)0.15 DIA HOLES,AL BLK	98978	PB1-2CB
					..ANDZ		
					..(ATTACHING PARTS)		
-86	211-0012-00			1	..SCREW,MACHINE:4-40 X 0.375,PNH,STL	TK0435	ORDER BY DESCR
-87	210-0406-00			1	..NUT,PLAIN,HEX:4-40 X 0.188,BRS CD PL	73743	12161-50
					..(END ATTACHING PARTS)		
-88	361-0414-00			1	..SPACER,DIODE:0.238 X 0.64 X 0.425,NYLON	80009	361-0414-00
-89	346-0032-00			1	..STRAP,RETAINING:0.075 DIA X 4.0 L,MLD RBR	98159	2829-75-4
-90	348-0005-00			1	..GROMMET,RUBBER:BLACK,ROUND,0.375 ID	70485	230X-36017
-91	129-0323-00			1	..SPACER,POST:1.0 L,4-40 EA END,AL,0.25 HEX	80009	129-0323-00
					..(ATTACHING PARTS)		
-92	211-0097-00			1	..SCREW,MACHINE:4-40 X 0.312,PNH,STL	TK0435	ORDER BY DESCR
					..(END ATTACHING PARTS)		
-93	385-0016-00			1	..SPACER,POST:1.0 L W/6-32 THD THRU,NYLON	80009	385-0016-00
					..(ATTACHING PARTS)		
-94	211-0507-00			1	..SCREW,MACHINE:6-32 X 0.312,PNH,STL	83385	ORDER BY DESCR
					..(END ATTACHING PARTS)		
-95	134-0158-00			4	..BUTTON,PLUG:0.187 DIA,NYLON	02768	207-080501-00
-96	337-2533-00			1	.SHIELD,ELEC:LINE INVERT,TOP	80009	337-2533-00
					.(ATTACHING PARTS)		
-97	211-0101-00			4	.SCREW,MACHINE:4-40 X 0.25,FLH,100 DG,STL	TK0435	ORDER BY DESCR
					.(END ATTACHING PARTS)		
-98	344-0118-00			2	.RTNR,CAPACITOR:1.0 DIA,STEEL	80033	E50008 -044
					.(ATTACHING PARTS)		
-99	210-0586-00			2	.NUT,PL,ASSEM WA:4-40 X 0.25,STL CD PL	78189	211-041800-00
-100	211-0008-00			2	.SCREW,MACHINE:4-40 X 0.25,PNH,STL	93907	ORDER BY DESCR
					.(END ATTACHING PARTS)		
-101	----- -----			2	.TRANSISTOR:NPN,SILICON,TO-220		
					.(SEE Q34,Q40 REPL)		
					.(ATTACHING PARTS)		
-102	211-0034-00			2	.SCREW,MACHINE:2-56 X 0.5,PNH,STL	06950	ORDER BY DESCR
-103	210-0053-00			2	.WASHER,LOCK:#2 SPLIT,0.02 THK STL	78189	ORDER BY DESCR
-104	210-1008-00			2	.WASHER,FLAT:0.09 ID X 0.188 OD X 0.02,BRS	12327	ORDER BY DESCR
-105	342-0421-00			2	.INSULATOR,BSHG:0.089 ID X 0.24 OD 0.23 NYL	80009	342-0421-00
					.(END ATTACHING PARTS)		
-106	342-0420-00			2	.INSULATOR,PLATE:TRANSISTOR,PORCELAIN	80009	342-0420-00
-107	386-2634-00			1	.PL,CHOKE MTG:	80009	386-2634-00
					.(ATTACHING PARTS)		
-108	211-0619-00			2	.SCREW,MACHINE:6-32 X 1.5,FLH,100 DEG,STL	TK0433	ORDER BY DESCR
					.(END ATTACHING PARTS)		
-109	441-1420-00			1	.CHASSIS,SCOPE:LINE INVERT	80009	441-1420-00
					.(ATTACHING PARTS)		
-110	213-0041-00			2	.SCREW,TPG,TC:6-32 X 0.375,TYPE T,TRH,STL	93907	ORDER BY DESCR
					.(END ATTACHING PARTS)		
-111	342-0193-00			1	.INSULATOR,FILM:POWER SUPPLY,POLYIMIDE	80009	342-0193-00
-112	342-0103-00			1	.INSULATOR,BLOCK:HEAT-SINK SHIELD,NYLON	80009	342-0103-00
					.(ATTACHING PARTS)		
-113	211-0512-00			1	.SCREW,MACHINE:6-32 X 0.5,FLH,100 DEG,STL	TK0435	ORDER BY DESCR
-114	210-0457-00			1	.NUT,PL,ASSEM WA:6-32 X 0.312,STL CD PL	78189	511-061800-00
					.(END ATTACHING PARTS)		
-115	214-1625-00			1	.SPRING,FLAT:2.0 X 0.438,CU BE	80009	214-1625-00
-116	334-3379-01			1	.MARKER,IDENT:MARKED GROUND SYMBOL	80009	334-3379-01
-117	----- -----			1	.SWITCH,SLIDE:DPTT,0.5A,125VAC		
					.(SEE S99 REPL)		
					.(ATTACHING PARTS)		
-118	211-0097-00			2	.SCREW,MACHINE:4-40 X 0.312,PNH,STL	TK0435	ORDER BY DESCR
-119	210-0586-00			2	.NUT,PL,ASSEM WA:4-40 X 0.25,STL CD PL	78189	211-041800-00
					.(END ATTACHING PARTS)		
-120	210-0204-00			1	.TERMINAL,LUG:0.142 ID,LOCKING,BRZ TINNED	86928	A373-175
					.(ATTACHING PARTS)		

http://manoman.sqhill.com

Fig. & Index No.	Tektronix Part No.	Serial/Assembly No. Effective	Dscont	Qty	12345 Name & Description	Mfr. Code	Mfr. Part No.
5-121	210-0407-00			1	.NUT,PLAIN,HEX:6-32 X 0.25,BRS CD PL	73743	3038-402
					.(END ATTACHING PARTS)		
-122	210-0202-00			1	.TERMINAL,LUG:0.146 ID,LOCKING,BRZ TIN PL	86928	A-373-158-2
					.(ATTACHING PARTS)		
-123	210-0407-00			2	.NUT,PLAIN,HEX:6-32 X 0.25,BRS CD PL	73743	3038-402
					.(END ATTACHING PARTS)		
-124	----- -----			1	.SWITCH,SLIDE:DPDT,3A,125VAC		
					.(SEE S10 REPL)		
					.(ATTACHING PARTS)		
-125	211-0097-00			2	.SCREW,MACHINE:4-40 X 0.312,PNH,STL	TK0435	ORDER BY DESCR
-126	210-0586-00			2	.NUT,PL,ASSEM WA:4-40 X 0.25,STL CD PL	78189	211-041800-00
					.(END ATTACHING PARTS)		
-127	200-2264-00			1	.CAP,FUSEHOLDER:3AG FUSES	S3629	FEK 031 1666
-128	204-0832-00			1	.BODY,FUSEHOLDER:3AG & 5 X 20MM FUSES	TK0861	031 1673
-129	210-1039-00			1	.WASHER,LOCK:0.521 ID,INT,0.025 THK,SST	24931	ORDER BY DESCR
-130	----- -----			1	.FILTER,RFI:6A,250VAC,400HZ		
					.(SEE FL10 REPL)		
					.(ATTACHING PARTS)		
-131	211-0014-00			2	.SCREW,MACHINE:4-40 X 0.5,PNH,STL	TK0435	ORDER BY DESCR
-132	210-0586-00			2	.NUT,PL,ASSEM WA:4-40 X 0.25,STL CD PL	78189	211-041800-00
					.(END ATTACHING PARTS)		
					POWER SUPPLY WIRE KIT		
-133	198-3829-01			1	.WIRE SET,ELEC:	80009	198-3829-01
	175-6755-00			1	..CA ASSY,SP,ELEC:3,26 AWG,12.0 L,RIBBON	80009	175-6755-00
	352-0161-09			1	...HLDR,TERM CONN:3 WIRE,WHITE	80009	352-0161-09
					...(A14A2P99 TO S99)		
	175-6756-00			1	..CA ASSY,SP,ELEC:4,26 AWG,6.75 L,RIBBON	80009	175-6756-00
	352-0162-04			2	...HLDR,TERM CONN:4 WIRE,YELLOW	80009	352-0162-04
					...(A14A2P54 TO A14A1P54)		
	175-6757-00			1	..CA ASSY,SP,ELEC:7,22 AWG,8.0 L,RIBBON	80009	175-6757-00
	352-0165-00			2	...HLDR,TERM CONN:7 WIRE,BLACK	80009	352-0165-00
					...(A14A2P50 TO A14A1P50)		
	175-6758-00			1	..CA ASSY,SP,ELEC:6,22 AWG,7.5 L,RIBBON	80009	175-6758-00
	352-0164-02			2	...HLDR,TERM CONN:6 WIRE,RED	80009	352-0164-02
					...(A14A2P52 TO A14A1P52)		
	175-6759-00			1	..CA ASSY,SP,ELEC:5,22 AWG,5.5 L,RIBBON	80009	175-6759-00
	352-0163-08			2	...HLDR,TERM CONN:5 WIRE,GRAY	80009	352-0163-08
					...(A14A2P48 TO A14A1P48)		
	175-6760-00			1	..CA ASSY,SP,ELEC:4,18 AWG,31.0 L,8-N	80009	175-6760-00
	352-0200-00			2	...HLDR,TERM CONN:4 WIRE,BLACK	80009	352-0200-00
					...(A14A1P50 TO A14A1P50)		
-134	214-2932-01			1	.HEAT SINK,ELEC:POWER SUPPLY,ALUMINUM	80009	214-2932-01
-135	----- -----			1	CIRCUIT BD ASSY:SIGNALS OUT		
					(SEE A12A1 REPL)		
					(ATTACHING PARTS)		
-136	211-0008-00			3	SCREW,MACHINE:4-40 X 0.25,PNH,STL	93907	ORDER BY DESCR
					(END ATTACHING PARTS)		
					CKT BOARD ASSY INCLUDES:		
-137	131-0993-00			4	.BUS,CONDUCTOR:SHUNT ASSEMBLY,BLACK	22526	65474-005
-138	131-0589-00			19	.TERM,PIN:0.46 L X 0.025 SQ PH BRZ GLD	22526	48283-029
-139	136-0252-07			5	.SOCKET,PIN CONN:W/O DIMPLE	22526	75060-012
-140	131-1003-00			5	.CONN,RCPT,ELEC:CKT BD MT,3 PRONG	80009	131-1003-00
-141	131-0955-00			3	CONN,RCPT,ELEC:BNC,FEMALE	13511	31-279
-142	131-1315-01			2	CONN,RCPT,ELEC:BNC,FEMALE	80009	131-1315-01
-143	131-0771-00			2	CONN,RCPT,ELEC:2 MALE,2 FEM,PNL MT W/O MTG	91836	1904-2M58
					HDW		
					(ATTACHING PARTS)		
-144	220-0551-00			2	NUT,PLAIN,HEX:9 MM X 1.00,BRS NP	73743	ORDER BY DESCR
-145	210-0012-00			2	WASHER,LOCK:0.384 ID,INTL,0.022 THK,STL	09772	ORDER BY DESCR
					(END ATTACHING PARTS)		
-146	333-3280-00			1	PANEL,REAR:LOWER UNIT	80009	333-3280-00
					(ATTACHING PARTS)		
-147	211-0507-00			2	SCREW,MACHINE:6-32 X 0.312,PNH,STL	83385	ORDER BY DESCR
					(END ATTACHING PARTS)		
-148	441-1424-00			1	CHASSIS,SCOPE:SIG OUT	80009	441-1424-00

http://manoman.sqhill.com

Fig. & Index No.	Tektronix Part No.	Serial/Assembly No. Effective	Dscont	Qty	12345 Name & Description	Mfr. Code	Mfr. Part No.
5-149	----- -----			1	CIRCUIT BD ASSY:VERTICAL CHANNEL SWITCH		
					(SEE A8 REPL)		
					(ATTACHING PARTS)		
-150	211-0008-00			4	SCREW,MACHINE:4-40 X 0.25,PNH,STL	93907	ORDER BY DESCR
-151	211-0260-00			2	SCR,ASSEM WSHR:2-56 X 0.687,PNH,STL,POZ	01536	ORDER BY DESCR
					(END ATTACHING PARTS)		
					CKT BOARD ASSY INCLUDES:		
-152	426-1351-00			1	.FRAME,MICROCKT:1.75 CW	80009	426-1351-00
					.(ATTACHING PARTS)		
-153	211-0259-00			2	.SCR,ASSEM WSHR:2-56 X 0.437,PNH,STL,POZ	01536	ORDER BY DESCR
					.(END ATTACHING PARTS)		
-154	214-2543-00			1	.HT SK,MICROCKT:MICROCIRCUIT,AL	80009	214-2543-00
-155	131-2022-00			2	.CONTACT,ELEC:DUAL,BOTTOM,CU BE	80009	131-2022-00
					.(ATTACHING PARTS)		
-156	210-0629-00			6	.EYELET,METALLIC:0.059 OD X 0.093 L	80009	210-0629-00
					.(END ATTACHING PARTS)		
-157	131-2020-00			2	.CONTACT,ELEC:DUAL,TOP,BERYLLIUM COPPER	80009	131-2020-00
-158	136-0252-00			6	.SOCKET,PIN TERM:U/W 0.019 DIA PINS	00779	2-330808-7
-159	131-2032-00			2	.CONTACT,ELEC:SINGLE,TOP,CU BE	80009	131-2032-00
					.(ATTACHING PARTS)		
-160	210-0629-00			4	.EYELET,METALLIC:0.059 OD X 0.093 L	80009	210-0629-00
					.(END ATTACHING PARTS)		
-161	131-2033-00			2	.CONTACT,ELEC:SINGLE,BOTTOM,CU BE	80009	131-2033-00
-162	388-5349-01			1	.CIRCUIT BOARD:HF VERTICAL CHANNEL SWITCH	80009	388-5349-01
					.(ATTACHING PARTS)		
-163	210-0702-00			15	.EYELET,METALLIC:0.047 OD X 0.125 L	07707	S-6127
					.(END ATTACHING PARTS)		
-164	214-0668-00			1	.HEAT SINK,XSTR:TO-5,AL BLK ANOZ	13103	2211B
-165	333-2320-00			1	PANEL,REAR:	80009	333-2320-00
					(ATTACHING PARTS)		
-166	211-0008-00			2	SCREW,MACHINE:4-40 X 0.25,PNH,STL	93907	ORDER BY DESCR
-167	211-0507-00			2	SCREW,MACHINE:6-32 X 0.312,PNH,STL	83385	ORDER BY DESCR
					(END ATTACHING PARTS)		
-168	343-0213-00			1	CLAMP,LOOP:0.2 ID,PLASTIC	80009	343-0213-00
-169	441-1378-01			1	CHASSIS,CHAN SW:	80009	441-1378-01
-170	426-0807-02			1	FRAME PNL,CAB.:REAR	80009	426-0807-02
					(ATTACHING PARTS)		
-171	213-0270-00			4	SCREW,TPG,TF:10-32 X 0.75,SPCL TYPE,FILH	TK1543	234-74658-026
					(END ATTACHING PARTS)		
	174-0131-00			1	CA ASSY,SP,ELEC:6,26 AWG,28.0 L	80009	174-0131-00
					(FROM A17P1201 TO A21P2311)		
	174-0132-00			1	CA ASSY,SP,ELEC:7,26 AWG,8.0 L	80009	174-0132-00
					(FROM A3A3P24 TO A8P680)		
	174-0133-00			1	CA ASSY,SP,ELEC:9,26 AWG,15.0 L	80009	174-0133-00
					(FROM A25P2711 TO A20P1911)		
	174-0134-00			1	CA ASSY,SP,ELEC:5,26 AWG 6.0 L	80009	174-0134-00
					(FROM A3A3P91 TO A12A1P35)		
	174-0135-00			1	CA ASSY,SP,ELEC:9,26 AWG,8.0 L	80009	174-0135-00
					(FROM A25P3019 TO A3A3P43)		
	174-0136-00			1	CA ASSY,SP,ELEC:7,26 AWG,8.0 L	80009	174-0136-00
					(FROM A20P1944 TO A19A1P207)		
	174-0137-00			1	CA ASSY,SP,ELEC:6,26 AWG,20.0 L	80009	174-0137-00
					(FROM A17P1101 TO A23P2161)		
	174-0138-00			1	CA ASSY,SP,ELEC:7,26 AWG,10.0 L	80009	174-0138-00
					(FROM A2P325 TO A17P1401,DS901,DS902)		
	174-0139-00			1	CA ASSY,SP,ELEC:8,26 AWG,6.0 L	80009	174-0139-00
					(FROM A2P352 TO A27P346,A28P366)		
	174-0140-00			1	CABLE ASSY,RF:50 OHM COAX,12.0 L,9-6	80009	174-0140-00
					(FROM A7J496 TO J549)		
	174-0141-00			1	CABLE ASSY,RF:50 OHM COAX,17.0 L,9-6	80009	174-0141-00
					(FROM A20J3 TO A11J881)		
	174-0143-00			1	CABLE ASSY,RF:50 OHM COAX,17.0 L,9-5	80009	174-0143-00
					(FROM A20J2 TO A11J871)		
	174-0144-00			1	CABLE ASSY,RF:50 OHM COAX,4.0 L,6-3	80009	174-0144-00
					(FROM A7J270 TO A3A3J473)		
	174-0145-00			1	CABLE ASSY,RF:50 OHM COAX,6.0 L,6-3	80009	174-0145-00
					(FROM A7J473 TO A3A3J271)		

http://manoman.sqhill.com

Fig. & Index No.	Tektronix Part No.	Serial/Assembly No. Effective	Dscont	Qty	12345 Name & Description	Mfr. Code	Mfr. Part No.
5-	174-0146-00			2	CABLE ASSY,RF:50 OHM COAX,16.0 L,9-8 (FROM A3A3J1814 TO A19A1J26) (FROM A21J2208 TO A6J4408)	80009	174-0146-00
	174-0147-00			1	CABLE ASSY,RF:50 OHM COAX,16.0 L,9-4 (FROM A20J1 TO A3A3J1738)	80009	174-0147-00
	174-0148-00			1	CABLE ASSY,RF:50 OHM COAX,14.0 L,9-0 (FROM A3A3J1690 TO A19A1J43)	80009	174-0148-00
	174-0149-00			1	CABLE ASSY,RF:50 OHM COAX,6.0 L,6-2 (FROM A7J472 TO A3A3J41)	80009	174-0149-00
	174-0150-00			1	CABLE ASSY,RF:50 OHM COAX,19.0 L,9-7 (FROM A21J2203 TO A13J3432)	80009	174-0150-00
	174-0151-00			1	CABLE ASSY,RF:50 OHM COAX,12.0 L,9-3 (FROM A6J4473 TO J4472)	80009	174-0151-00
	174-0152-00			1	CABLE ASSY,RF:50 OHM COAX,4.0 L,6-2 (FROM A7J271 TO A3A3J472)	80009	174-0152-00
	174-0153-00			1	CABLE ASSY,RF:50 OHM COAX,18.0 L,6-N (FROM A8J694 TO A18J1641)	80009	174-0153-00
	174-0158-00			1	CA ASSY,SP,ELEC:5,26 AWG,10.0 L (FROM A2P340 TO CAM POWER)	80009	174-0158-00
	174-0168-00			1	CA ASSY,SP,ELEC:30,26 AWG,11.5 L (FROM A3A3P3246 TO A13P3446,A13P3467, A13P3475)	80009	174-0168-00
	174-0169-00			1	CA ASSY,SP,ELEC:40,26 AWG,11.5 L (FROM A3A3P44 TO A2P344)	80009	174-0169-00
	175-2640-00			1	CABLE ASSY,RF:50 OHM COAX,8.0 L,9-1 (FROM A11J842 TO A10J802)	80009	175-2640-00
	175-3757-00			1	CABLE ASSY,RF:50 OHM COAX,21,0 L,9-3 (FROM A20J4 TO A13J3596)	80009	175-3757-00
	175-3760-00			1	CABLE ASSY,RF:50 OHM COAX,19.0 L,9-N (FROM A13J3599 TO A19A1J11)	80009	175-3760-00
	175-3803-00			1	CA ASSY,SP,ELEC:3,26 AWG,10.0 L,RIBBON (FROM A24P2415 TO R2465)	80009	175-3803-00
	175-4408-00			1	CA ASSY,SP,ELEC:4,26 AWG,11.0 L,RIBBON (FROM A21P2305 TO A3A3P925)	80009	175-4408-00
	175-5349-00			1	CABLE ASSY,RF:50 OHM COAX,15.0 L,9-1 (FROM A3A3J3202 TO A13J3402)	80009	175-5349-00
	175-5531-00			1	CABLE ASSY,RF:50OHM COAX,6.25 L,9-1 (FROM A3A3J8 TO A12A1J64)	80009	175-5531-00
	175-5532-00			1	CABLE ASSY,RF:50 OHM COAX,6.25 L,9-5 (FROM A3A3J11 TO A12A1J67)	80009	175-5532-00
	175-5533-00			1	CABLE ASSY,RF:50 OHM COAX 6.25 L,9-4 (FROM A3A3J10 TO A12A1J68)	80009	175-5533-00
	175-5534-00			1	CABLE ASSY,RF:50 OHM COAX,6.25 L,9-2 (FROM A3A3J7 TO A12A1J65)	80009	175-5534-00
	175-5535-00			1	CABLE ASSY,RF:50 OHM COAX,6.25 L,9-3 (FROM A3A3J9 TO A12A1J66)	80009	175-5535-00
	175-5692-00			1	CABLE ASSY,RF:50 OHM COAX,8.0 L,9-2 (FROM A11J841 TO A10J801)	80009	175-5692-00
	175-5694-00			1	CABLE ASSY,RF:50 OHM COAX,8.0 L,9-3 (FROM A11J844 TO A10J804)	80009	175-5694-00
	175-5696-00			1	CABLE ASSY,RF:50 OHM COAX,8.0 L,9-4 (FROM A11J843 TO A10J803)	80009	175-5696-00
	175-6588-00			1	CA ASSY,SP,ELEC:3,26 AWG,4.0 L,RIBBON (FROM A17P1102 TO R2195)	80009	175-6588-00
	175-7212-00			1	CA ASSY,SP,ELEC:5,26 AWG,4.0 L,RIBBON (FROM A26P1102 TO A25P2615)	80009	175-7212-00
	175-7981-00			1	CA ASSY,SP,ELEC:2,26 AWG,4.5 L,RIBBON (FROM A25P2613 TO DS2624)	80009	175-7981-00
	175-7984-00			1	CA ASSY,SP,ELEC:3,26 AWG,6.0 L,RIBBON (FROM A25P2722 TO R2720)	80009	175-7984-00
	175-7987-00			1	CA ASSY,SP,ELEC:4,26 AWG,5.5 L,RIBBON (FROM A22P2048 TO A23P2148)	80009	175-7987-00
	175-7994-00			1	CA ASSY,SP,ELEC:7,26 AWG,16.0 L,RIBBON (FROM A25P2587 TO A3A3P987)	80009	175-7994-00
	175-7997-00			2	CA ASSY,SP,ELEC:9,26 AWG,7.0 L,RIBBON (FROM A26P1201 TO A25P2572) (FROM A23P2142 TO A21P2242)	80009	175-7997-00

http://manoman.sqhill.com

Fig. & Index No.	Tektronix Part No.	Serial/Assembly No. Effective	Dscont	Qty	12345 Name & Description	Mfr. Code	Mfr. Part No.
5-	175-8000-00			1	CA ASSY,SP,ELEC:10,26 AWG,3.5 L,RIBBON (FROM A24P2404 TO A25P2504)	80009	175-8000-00
	175-8001-00			1	CA ASSY,SP,ELEC:10,26 AWG,15.5 L,RIBBON (FROM A25P2824 TO A21P2224)	80009	175-8001-00
	175-8029-00			1	CABLE ASSY,RF:50 OHM COAX,12.0 L,9-2 (FROM A21J2302 TO A3A3J916)	80009	175-8029-00
	175-8130-00			1	CA ASSY,SP,ELEC:5,26 AWG,12.0 L,RIBBON (FROM A3A3P17 TO A14A2P71)	80009	175-8130-00
	175-8238-00			1	CABLE ASSY,RF:50 OHM COAX,4.0 L,9-3 (FROM A2J395 TO J396)	80009	175-8238-00
	175-8245-00			1	CABLE ASSY,RF:50 OHM COAX,18.0 L,6-0 (FROM A8J592 TO A18J1642)	80009	175-8245-00
	175-8665-00			1	CABLE ASSY,RF:50 OHM COAX,15.25 L,9-0 (FROM A3A3J3201 TO A13J3401)	80009	175-8665-00
	175-9318-00			1	CA ASSY,SP,ELEC:8,26 AWG,11.0 L,RIBBON (FROM A3A3P82 TO A14A2P82)	80009	175-9318-00
	175-9324-00			1	CA ASSY,SP,ELEC:2,26 AWG,17.5 L,RIBBON (FROM A14A2P90 TO R90)	80009	175-9324-00
	175-9325-00			1	CA ASSY,SP,ELEC:10,22 AWG,17.0 L,RIBBON (FROM A3A3P83 TO A14A2P83)	80009	175-9325-00
	175-9404-00			1	CABLE ASSY,RF:50 OHM COAX,12.5 L,9-6 (FROM A3A3J2316 TO A21J2316)	80009	175-9404-00
	175-9607-00			1	CA ASSY,SP,ELEC:2,26 AWG,3.0 L,RIBBON (FROM A25P2512 TO DS2558)	80009	175-9607-00
	179-2964-00			1	WIRING HARNESS:STORAGE (9-1 - A25J2514 TO TOP BNC; 9-2 - A25J2626 TO MIDDLE BNC; 9-3 - A25J2584 TO BOT BNC)	80009	179-2964-00
	195-0093-02			1	LEAD,ELECTRICAL:26 AWG,2.0 L,9-7 (-HORIZ;+HORIZ;GEOM TO CRT NECK PINS)	80009	195-0093-02
	195-7224-00			1	LEAD,ELECTRICAL:18 AWG,14.0 L,5-4 (FROM PLUG-IN CHASSIS TO TOP RAIL)	80009	195-7224-00
	196-1203-00			2	LEAD,ELECTRICAL:26 AWG,1.5 L,8-N (VERT TERM TO CRT NECK PINS)	80009	196-1203-00
	196-3083-00			1	LEAD,ELECTRICAL:24 AWG,8.75 L,9-1 (FROM A23P2164 TO A22P2064)	80009	196-3083-00
	196-3084-00			1	LEAD,ELECTRICAL:26 AWG,10.5 L,8-2 (FROM A25P3013 TO A23P2113)	80009	196-3084-00
	196-3085-00			2	LEAD,ELECTRICAL:26 AWG,3.5 L,9-N (FROM A19A1P190 TO VERT TERM) (FROM A26P1101 TO A17P1301)	80009	196-3085-00
	198-5066-00			1	WIRE SET,ELEC: (FROM A23P117 TO A22P2017)	80009	198-5066-00

http://manoman.sqhill.com

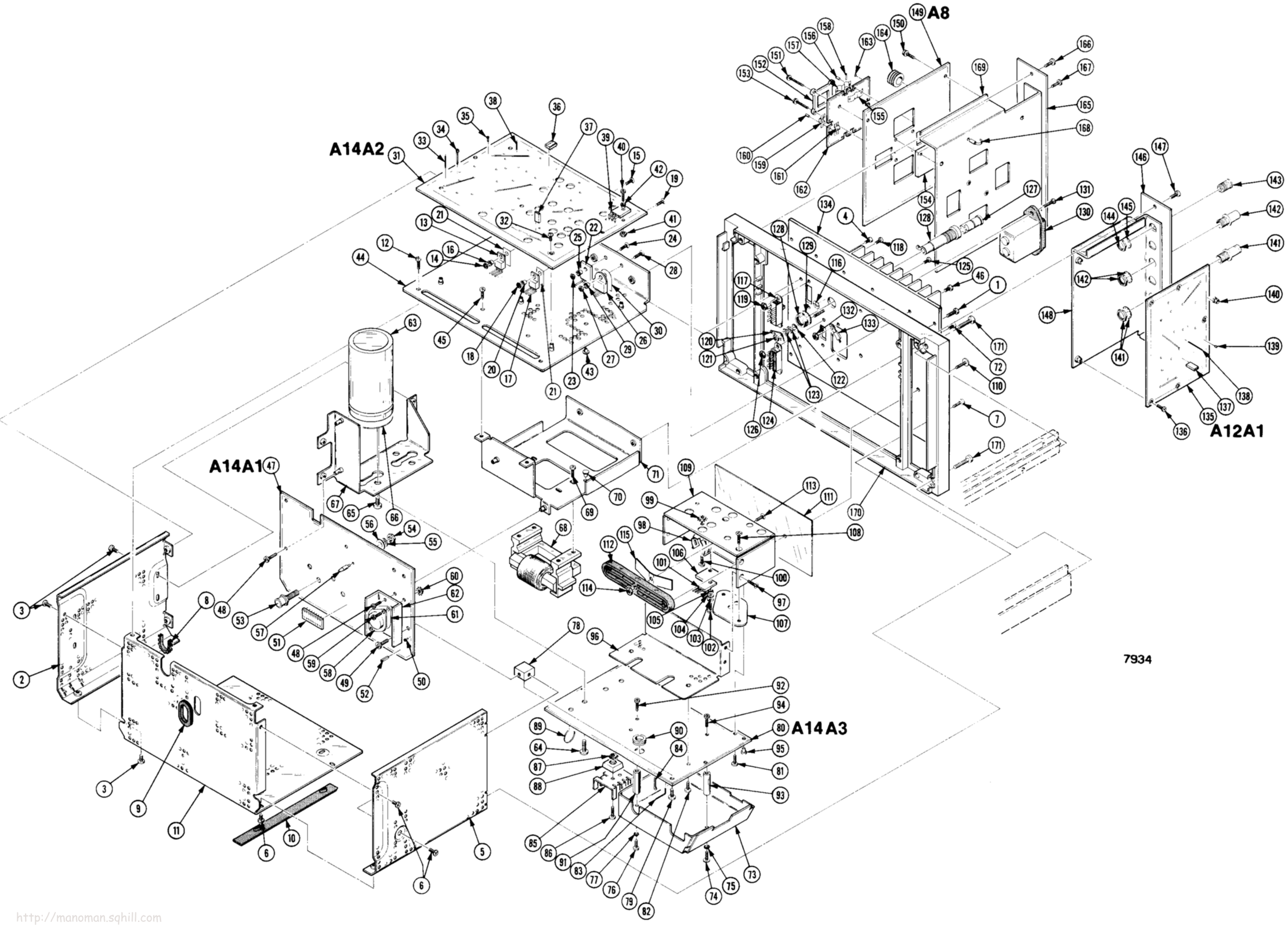

http://manoman.sqhill.com

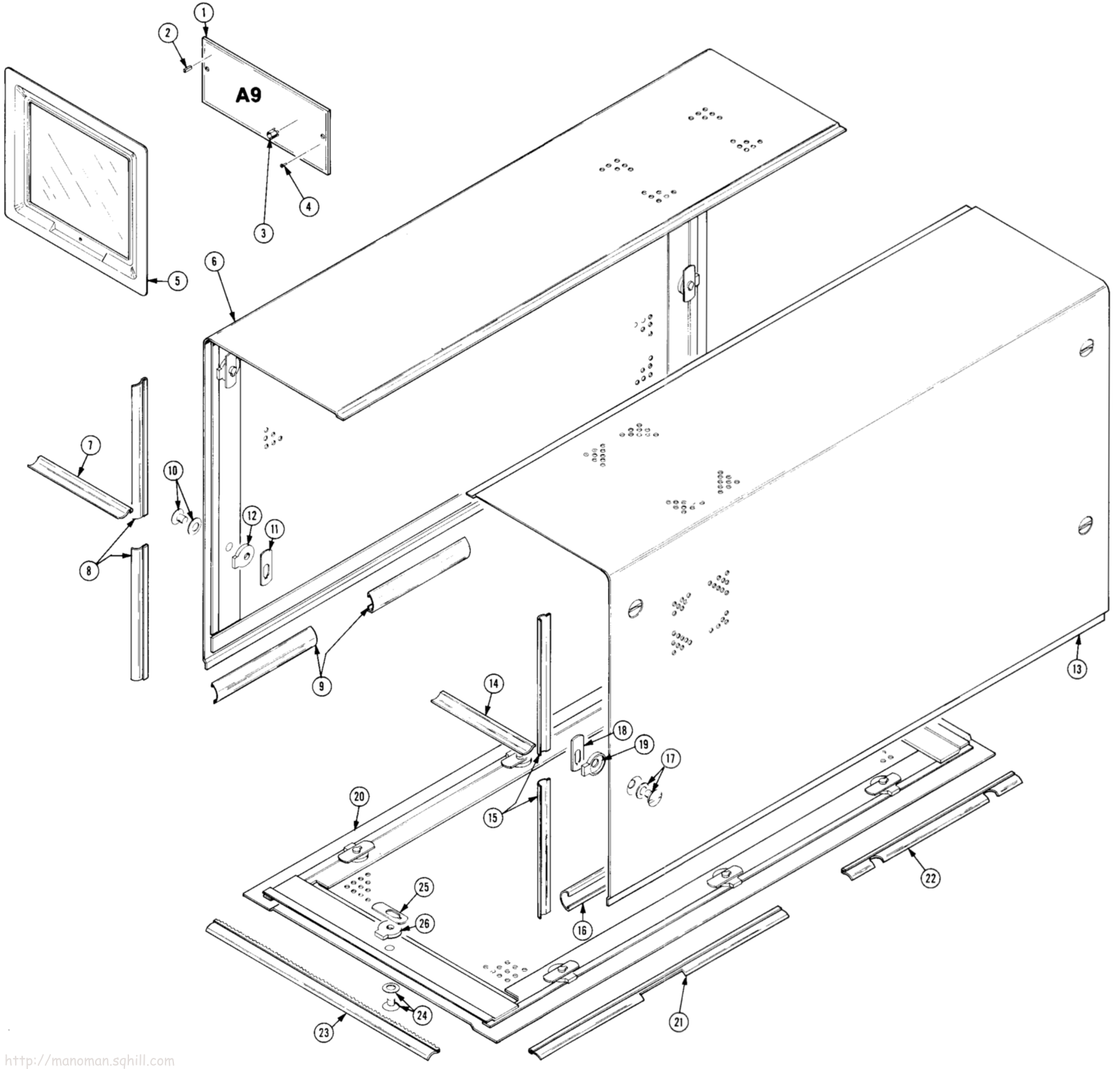

http://manoman.sqhill.com

Fig. & Index No.	Tektronix Part No.	Serial/Assembly No. Effective	Dscont	Qty	12345	Name & Description	Mfr. Code	Mfr. Part No.
6-								
						OPTION 02		
-1	----- -----			1		CIRCUIT BD ASSY:X-Y COMP (SEE A9 REPL)		
-2	136-0263-04			8		.SOCKET,PIN TERM:U/W 0.025 SQ PIN	22526	75377-001
-3	131-1003-00			4		.CONN,RCPT,ELEC:CKT BD MT,3 PRONG	80009	131-1003-00
-4	136-0252-07			20		.SOCKET,PIN CONN:W/O DIMPLE	22526	75060-012
						OPTION 03		
-5	378-0603-00			1		FILTER,MESH:EMI	80009	378-0603-00
-6	390-0550-00			1		CAB.SIDE,SCOPE:LEFT,W/SHIELDING GASKET	80009	390-0550-00
-7	348-0332-00			2		.SHLD GSKT,ELEK:SOLID TYPE,4.285 L	80009	348-0332-00
-8	348-0333-00			4		.SHLD GSKT,ELEK:SOLID TYPE,4.8 L	80009	348-0333-00
-9	348-0336-00			4		.SHLD GSKT,ELEK:SOLID TYPE,9.625 L	80009	348-0336-00
-10	214-0603-00			4		.PIN,SECURING:0.45 DIA X 0.27,ZAMAK	26365	ORDER BY DESCR
-11	386-1633-00			4		.PLATE,LCH LKG:STEEL,CD PL	80009	386-1633-00
-12	386-1634-00			4		.PLATE,LCH INDEX:ACETAL	80009	386-1634-00
-13	390-0695-00			1		CAB.SIDE,SCOPE:RIGHT,EMI	80009	390-0695-00
-14	348-0332-00			2		.SHLD GSKT,ELEK:SOLID TYPE,4.285 L	80009	348-0332-00
-15	348-0333-00			4		.SHLD GSKT,ELEK:SOLID TYPE,4.8 L	80009	348-0333-00
-16	348-0336-00			4		.SHLD GSKT,ELEK:SOLID TYPE,9.625 L	80009	348-0336-00
-17	214-0603-02			4		.PIN ASSY,SECRG:W/SPRING WASHER	80009	214-0603-02
-18	386-1633-00			4		.PLATE,LCH LKG:STEEL,CD PL	80009	386-1633-00
-19	386-1634-00			4		.PLATE,LCH INDEX:ACETAL	80009	386-1634-00
-20	390-0554-00			1		CAB.BOT,SCOPE:	80009	390-0554-00
-21	348-0335-00			2		.SHLD GSKT,ELEK:SOLID TYPE,8.65 L	80009	348-0335-00
-22	348-0334-00			2		.SHLD GSKT,ELEK:SOLID TYPE,7.64 L	80009	348-0334-00
-23	348-0274-00			2		.SHLD GSKT,ELEK:FINGER TYPE,24.0 L	30817	97-555COC
-24	214-0603-02			6		.PIN ASSY,SECRG:W/SPRING WASHER	80009	214-0603-02
-25	386-1633-00			6		.PLATE,LCH LKG:STEEL,CD PL	80009	386-1633-00
-26	386-1634-00			6		.PLATE,LCH INDEX:ACETAL	80009	386-1634-00

http://manoman.sqhill.com

Fig. & Index No.	Tektronix Part No.	Serial/Assembly No. Effective	Dscont	Qty	12345 Name & Description	Mfr. Code	Mfr. Part No.
7-1	378-0625-08			1	FILTER,LT,CRT:GREEN,4.4 X 4.15 X 0.03,	80009	378-0625-08
-2	161-0066-00			1	CABLE ASSY,PWR,:3,18AWG,115V,98.0 L	16428	CH8481, FH8481
-3	161-0066-09			1	CABLE ASSY,PWR,:3,0.75MM SQ,220V,99.0 L (OPTION A1 ONLY)	S3109	86511000
-4	161-0066-11			1	CABLE ASSY,PWR,:3,0.75MM,240V,96.0 L (OPTION A3 ONLY)	S3109	ORDER BY DESCR
-5	161-0066-10			1	CABLE ASSY,PWR,:3,0.75MM SQ,240V,96.0 L (OPTION A2 ONLY)	TK1373	24230
-6	161-0066-12			1	CABLE ASSY,PWR,:3,18 AWG,250V,99.0 L NORTH AMERICAN (OPTION A4 ONLY)	70903	CH-77893
-7	161-0154-00			1	CABLE ASSY,PWR,:3,0.75MM SQ,240V,6A,2.5M L SAFETY CONTROLLED (OPTION A5 ONLY)	S3109	86515000
					OPTIONAL ACCESSORIES		
	012-0341-00			1	CA ASSY,CUR P:12.0	80009	012-0341-00

http://manoman.sqhill.com

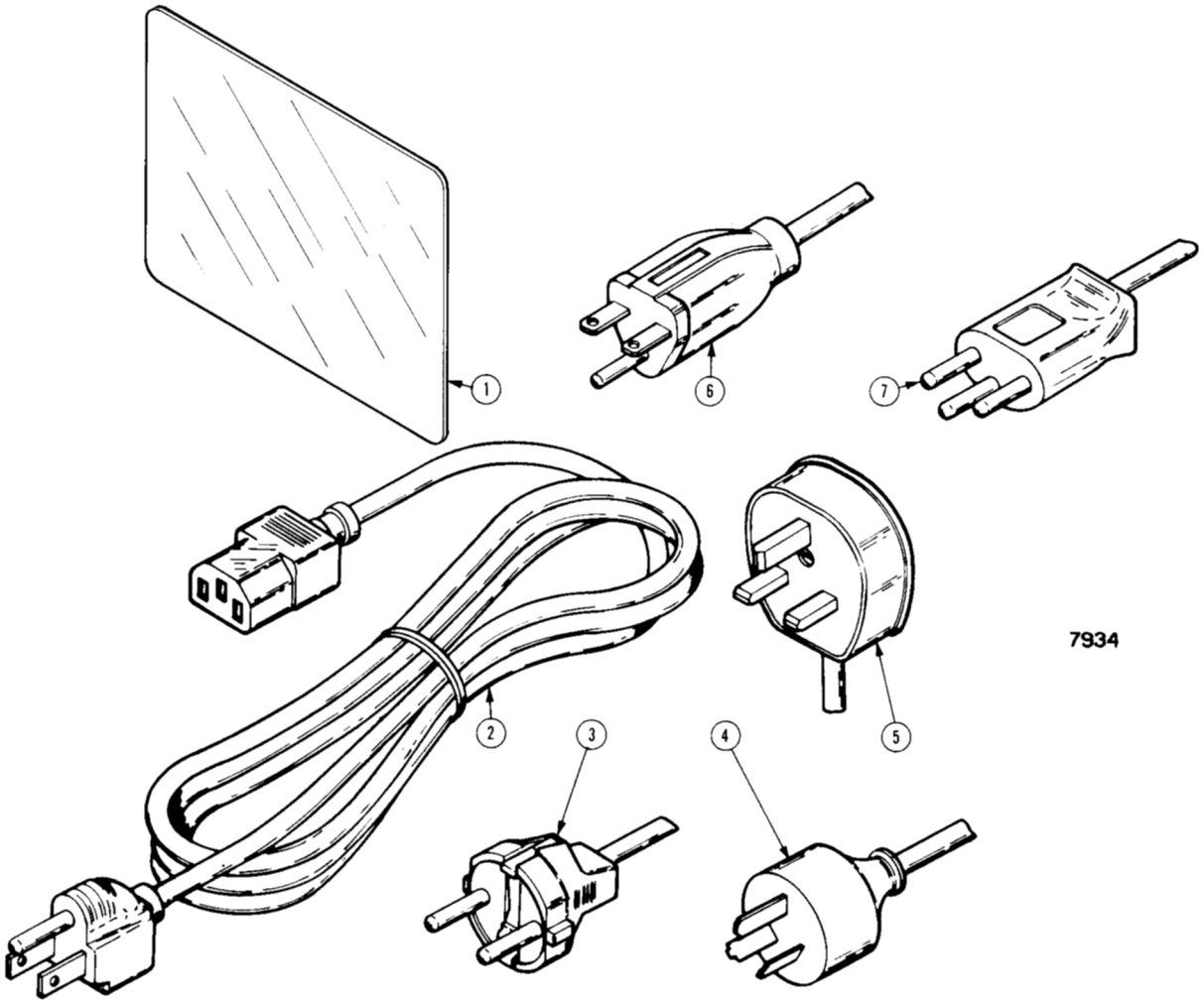

http://manoman.sqhill.com

MANUAL CHANGE INFORMATION

At Tektronix, we continually strive to keep up with latest electronic developments by adding circuit and component improvements to our instruments as soon as they are developed and tested.

Sometimes, due to printing and shipping requirements, we can't get these changes immediately into printed manuals. Hence, your manual may contain new change information on following pages.

A single change may affect several sections. Since the change information sheets are carried in the manual until all changes are permanently entered, some duplication may occur. If no such change pages appear following this page, your manual is correct as printed.

http://manoman.sqhill.com

Tektronix
COMMITTED TO EXCELLENCE

MANUAL CHANGE INFORMATION

Manual Insert for Product Group 42

PRODUCT: 7934 Oscilloscope DATE: 7/11/86

CHANGE REFERENCE: C1/786 MANUAL PART NO.: 070-5880-00

These changes are effective for all serial numbers.

REPLACEABLE ELECTRICAL PARTS LIST CHANGES

CHANGE TO:

A7R63	321-0114-00	RES,FXD,FILM:150 OHM,1%,0.125W
A7R64	321-0097-00	RES,FXD,FILM:100 OHM,1%,0.125W
A7R65	321-0114-00	RES,FXD,FILM:150 OHM,1%,0.125W
A7R66	321-0097-00	RES,FXD,FILM:100 OHM,1%,0.125W

TEXT CHANGES

SECTION 1 - GENERAL INFORMATION

On page 1-19, the 070-5880-00 Instruction Manual should be listed under RECOMMENDED ACCESSORIES. It is not a Standard Accessory.

DIAGRAM CHANGES

CALIBRATOR AND MODE SWITCH 2

Change the interconnection information for pin 20 of P344 (grid location B5) to read: B SWP/AUX GATE FROM P44-20.

Change the interconnection information for pin 21 of P344 (grid location C5) to read: A HOLDOFF FROM P44-21.

Change the interconnection information for pin 19 of P344 (grid location C5) to read: B HOLDOFF FROM P44-19.

Swap the A and B INTENSITY labels (grid location C1) so DS901 is labeled B INTENSITY and DS902 is labeled A INTENSITY.

Change R369 (grid location E3) to R364.

Change R364 (grid location F3) to R369.

http://manoman.sqhill.com

DIAGRAM CHANGES (cont)

ASSEMBLY A3

Add pin numbering information to P3246 (grid location K1). The top row of pins should be numbered 1 through 15 (right to left), with an index arrow at pin 1. The bottom row of pins should be numbered 16 through 30 (right to left).

MAIN INTERFACE 3

Change P75 (grid location A4) to P3246.

Change the pin numbering on P3246 (grid location D1) to read 6 through 15 (right to left), rather than 1 through 10.

ASSEMBLY A7

In the locator table for Assembly A7, change the Schematic Location to C1 for R63 and R64, and D2 for R65 and R66.

TRIGGER SELECTOR 5

Change the value of R63 (grid location C1) and R65 (grid location D2) from 301 to 150.

Change the value of R64 (grid location C1) and R66 (grid location D2) from 200 to 100.

ASSEMBLY A13

Change the tab label to: ASSEMBLIES A13 & A3

Add pin numbering information to P3246 on assembly A3 (grid location K1). The top row of pins should be numbered 1 through 15 (right to left), with an index arrow at pin 1. The bottom row of pins should be numbered 16 through 30 (right to left).

http://manoman.sqhill.com

DIAGRAM CHANGES (cont)

READOUT ⟨6⟩

Change the interconnection information for pin 9 of P3446 (grid location A1) to read: READOUT GATE FROM P3246-29 ⟨3⟩.

Change the interconnection information for pin 7 of P3446 (grid location A2) to read: TO/FROM P3246-27 ⟨3⟩.

Change the interconnection information for pin 1 of P3446 (grid location A3) to read: READOUT INTENSITY FROM P3246-21 ⟨3⟩.

Change pin 8 of P3246 (grid location C1) to pin 28.

Change pin 10 of P3246 (grid location C1) to pin 30.

Change the interconnection information for P3246 pin 30 (formerly pin 10, grid location C1) to read: X-Y INHIBIT TO J814, J1814, J2316 ⟨3⟩, P24-7, PIN CE ⟨7⟩ VIA ⟨3⟩.

Change pins 16, 18, and 20 of P3246 (grid location C3) to 23, 24, and 25 respectively.

Change pins 14 and 22 of P3246 (grid location C4) to 22 and 26 respectively.

Change the interconnection information for P3475 (grid location H4) to read: FROM P3246 ⟨3⟩.

Change the interconnection information for P3467 (grid location H5) to read: TO P3246 ⟨3⟩.

VERTICAL AMPLIFIER ⟨8⟩

Change the interconnection information for J26 (grid location A4) to read: X-Y INHIBIT FROM J1814 ⟨3⟩.

ASSEMBLY A9, A10, A11

Change the label for the upper third of the locator table to read: ASSEMBLY A9 -- X-Y Compensation Circuit Board (Option 2 Only)

http://manoman.sqhill.com

DIAGRAM CHANGES (cont)

HORIZONTAL INTERFACE 10

Change the tab label to read: HORIZONTAL AMPLIFIER 10

Change the interconnection information for J1 (grid location A5) to read: X-Y INHIBIT FROM J738 3.

http://manoman.sqhill.com

Tektronix®
COMMITTED TO EXCELLENCE

MANUAL CHANGE INFORMATION

Date: 9-26-86 Change Reference: C2/986

Product: 7934 OSCILLOSCOPE Manual Part No.: 070-5880-00

DESCRIPTION Product Group 42

THESE CHANGES ARE EFFECTIVE FOR ALL SERIAL NUMBERS

TEXT CORRECTIONS

Page 1-16 Table 1-8

CHANGE TO READ:		Bandwidth (MHz)
7A24	None	350

Page 1-17 Table 1-9

CHANGE TO READ:	Triggered Frequency Range
7B10	DC to 550 MHz
7B15	DC to 550 MHz

http://manoman.sqhill.com

Tektronix
COMMITTED TO EXCELLENCE

MANUAL CHANGE INFORMATION

Date: 11-20-86 Change Reference: M61793

Product: 7934 OSCILLOSCOPE Manual Part No.: 070-5880-00

DESCRIPTION Product Group 42

These changes are effective for all serial numbers.

CHANGE TO: REPLACEABLE ELECTRICAL PARTS LIST CHANGES

A7C4	283-0168-00	CAP.,FXD,CER DI:12PF,5%,100V (NOMINAL VALUE SELECTED)
A7C4	283-0069-00	CAP.,FXD,CER DI:15PF,20%,50V (SELECTABLE)
A7C4	283-0109-00	CAP.,FXD,CER DI:27PF,5%,1000V (SELECTABLE)
A7C4	283-0140-00	CAP.,FXD,CER DI:4.7PF,50V,+/-0.25PF (SELECTABLE)
A7C4	283-0154-00	CAP.,FXD,CER DI:22PF,5%,50V (SELECTABLE)
A7C4	283-0157-00	CAP.,FXD,CER DI:7PF,5%,50V (SELECTABLE)
A7C4	283-0158-00	CAP.,FXD,CER DI:1PF,+/-0.1PF,50V (SELECTABLE)
A7C4	283-0159-00	CAP.,FXD,CER DI:18PF,5%,50V (SELECTABLE)
A7C4	283-0175-00	CAP.,FXD,CER DI:10PF,5%,200V (SELECTABLE)
A7C4	283-0181-00	CAP.,FXD,CER DI:1.8PF,+/-0.1%,100V (SELECTABLE)
A7C4	283-0260-00	CAP.,FXD,CER DI:5.6PF,+/-0.25PF,200V (SELECTABLE)
A7R99	317-0100-00	RES.,FXD,COMPSN:10 OHM,5%,0.125W (NOMINAL VALUE SELECTED)
A7R99	317-0047-00	RES.,FXD,COMPSN:4.7 OHM,5%,0.125W (SELECTABLE)
A7R99	317-0082-00	RES.,FXD,COMPSN:8.2 OHM,5%,0.125W (SELECTABLE)
A7R99	317-0120-00	RES.,FXD,COMPSN:12 OHM,5%,0.125W (SELECTABLE)
A7R99	317-0150-00	RES.,FXD,COMPSN:15 OHM,5%,0.125W (SELECTABLE)
A7R99	317-0180-00	RES.,FXD,COMPSN:18 OHM,5%,0.125W (SELECTABLE)

http://manoman.sqhill.com

DESCRIPTION

CHANGE TO:

A7R99	317-0200-00	RES.,FXD,COMPSN:20 OHM, 5%,0.125W (SELECTABLE)
A7R99	317-0240-00	RES.,FXD,COMPSN:24 OHM, 5%,0.125W (SELECTABLE)
A7R99	317-0270-00	RES.,FXD,COMPSN:27 OHM, 5%,0.125W (SELECTABLE)

TEXT CORRECTIONS

Page 5-33

ADD:

TABLE 5-4

Components	Nominally Installed	Alternate Values	Affected Characteristics
A7C4	283-0168-00 12 pf	1 pf - 27 pf	Selected for optimum Bandwidth for the TRIGGER SELECTOR board.
A7R99	317-0100-00 10 ohm	4.7 ohm - 27 ohm	

Figure 8-6. (C4 and R99 raised in tepee position)

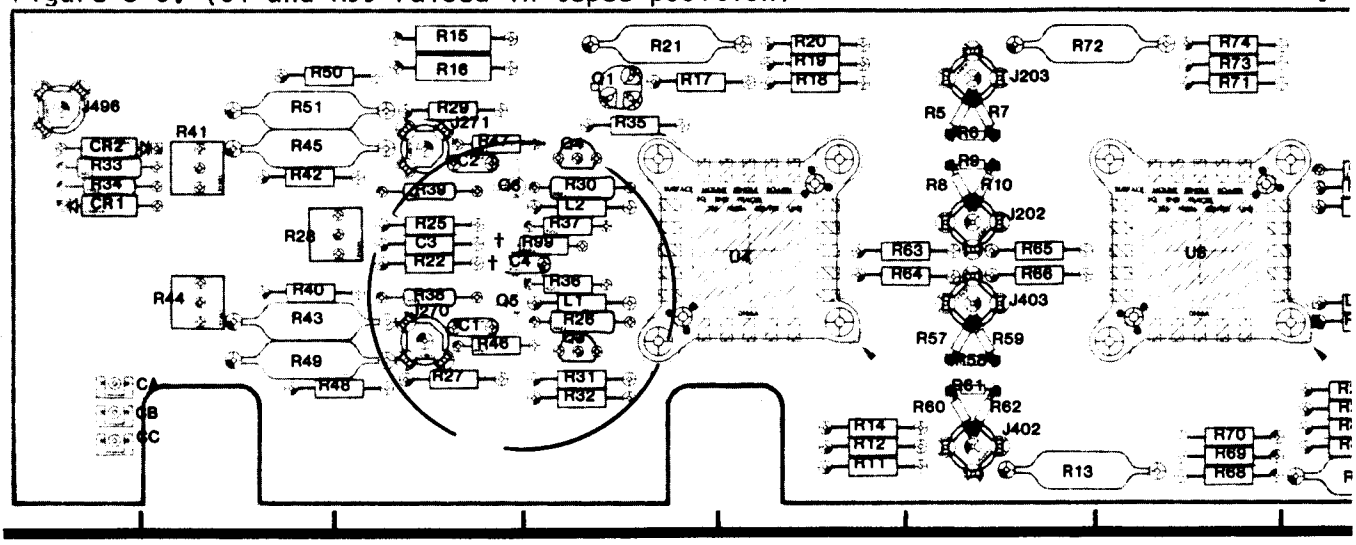

† Tepee. Components

Figure 8-6. A7-Trigger Selector Circuit Board Assembly.

http://manoman.sqhill.com

Figure 8-6. (C4 and R99 raised in tepee position)

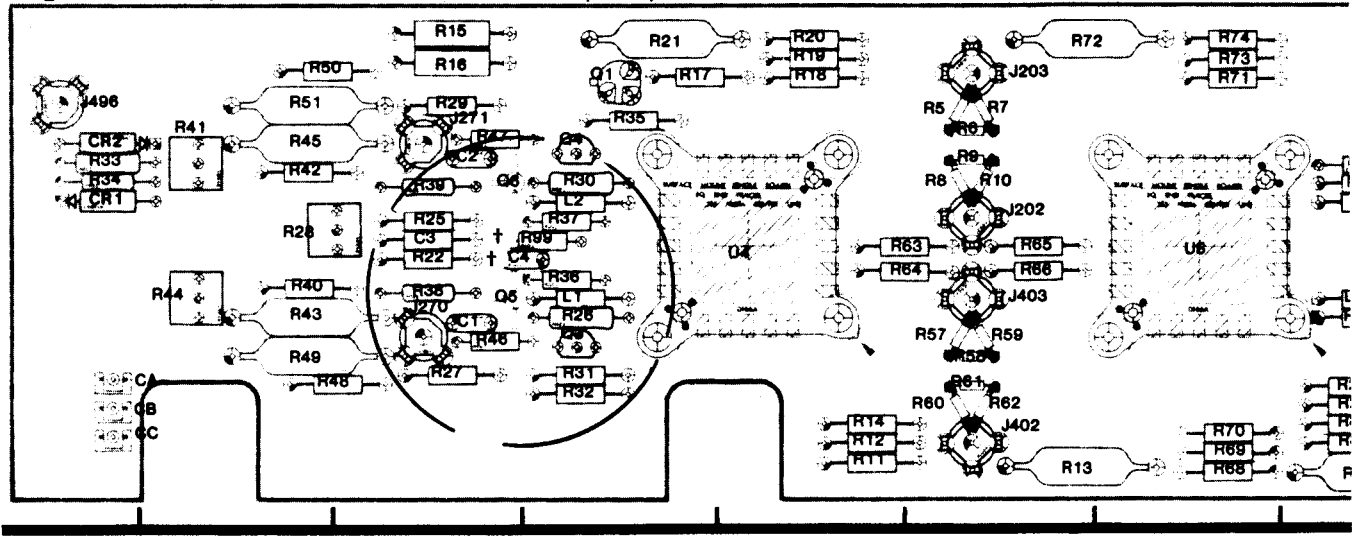

† Tepee. Components

Figure 8-6. A7-Trigger Selector Circuit Board Assembly.

http://manoman.sqhill.com

Tektronix
COMMITTED TO EXCELLENCE

MANUAL CHANGE INFORMATION

Date: 12-4-86 Change Reference: C3/1286

Product: 7934 OSCILLOSCOPE Manual Part No.: 070-5880-00

DESCRIPTION Product Group 42

This change is effective for all serial numbers.

Page 2-4 Fig. 2-2a. Rear-panel controls and connectors.

Call out labels 6 thru 11 are changed to correspond with Fig. 2-2b, page 2-5.

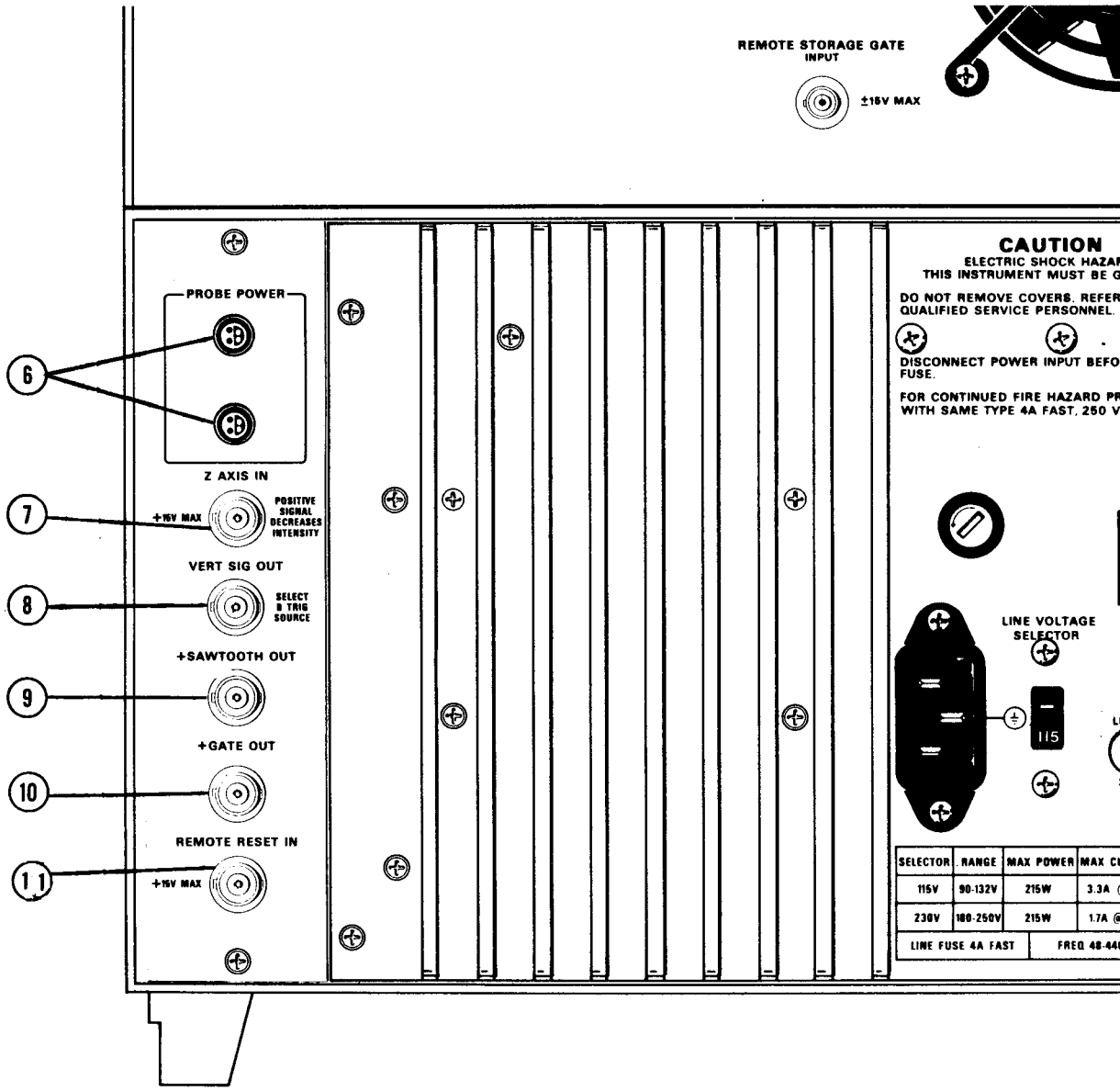

http://manoman.sqhill.com

Tektronix®
COMMITTED TO EXCELLENCE

MANUAL CHANGE INFORMATION

Date: 12/12/86 Change Reference: C4/1286

Product: 7934 Manual Part No.: 070-5880-00

DESCRIPTION PG 42

These changes are effective for all Serial Numbers

MECHANICAL PARTS LIST

ADD:

6-27	346-0045-00	9	STRAP,CONN COV: BNC ONE END,POLY
6-28	200-0678-00	9	COVER, TEST ADAPTER:2.5 x 3.5 x 1.5,AL

ADD THESE NEW INDEXED PARTS TO FIG. 6 OPTION 03, EMI (EXPLODED VIEW)

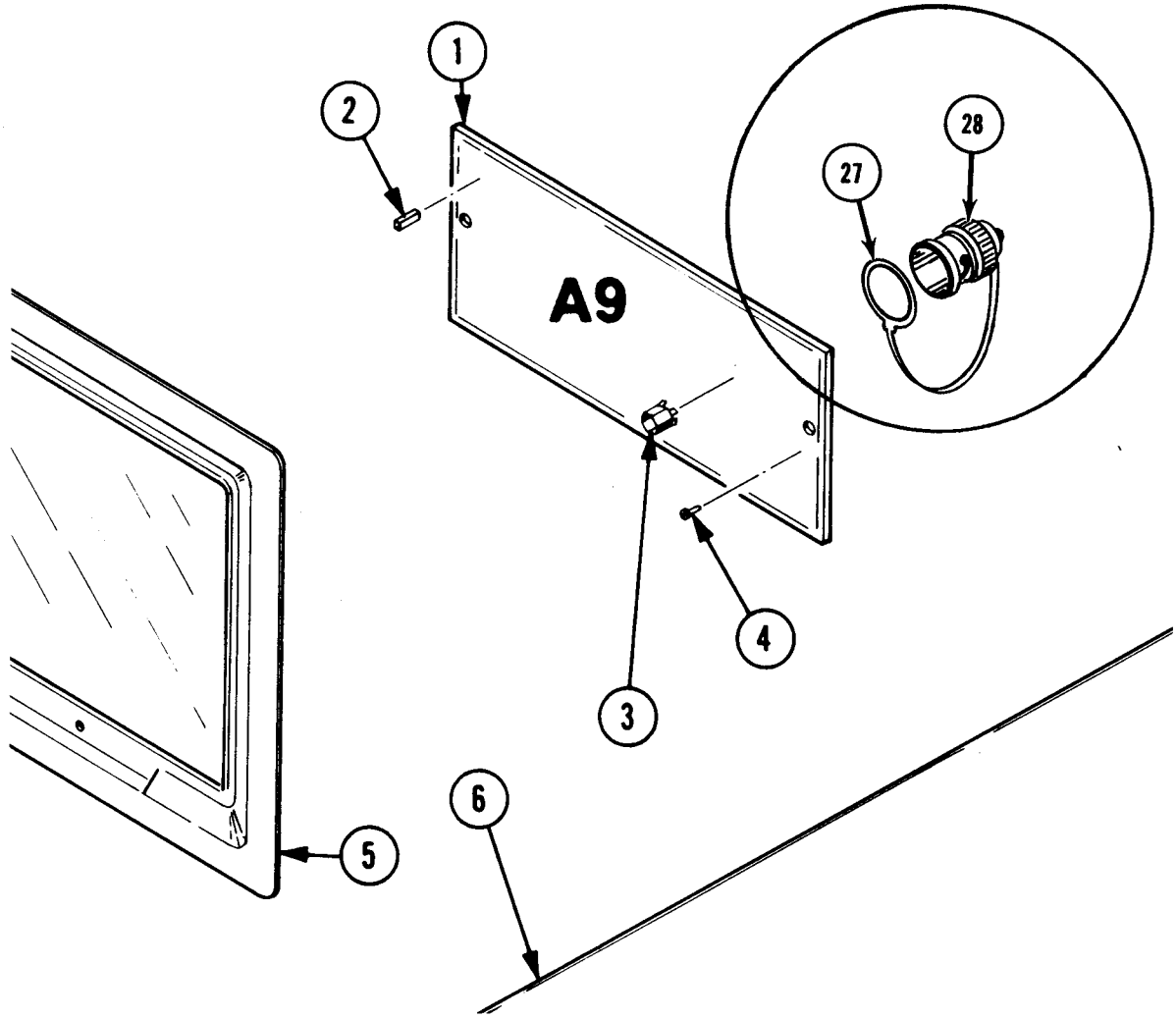

http://manoman.sqhill.com

Tektronix
COMMITTED TO EXCELLENCE

MANUAL CHANGE INFORMATION

Date: 1/5/87 Change Reference: M61521

Product: 7934 OSCILLOSCOPE Manual Part No.: 070-5880-00

DESCRIPTION Product Group 42

These changes are effective at serial number B020321.

REPLACEABLE MECHANICAL PARTS LIST CHANGES

CHANGE TO:

Fig. 5-84 214-0579-00 2 ..TERM TEST POINT:BRS CD PL

DIAGRAM 12 CONVERTER/RECTIFIERS

REMOVE: TP31 and TP38 shown on A14A3 INVERTER BOARD

Figure 8-18. A14A3-Inverter Circuit Board Assembly.

REMOVE: TP31 and TP38 shown below.

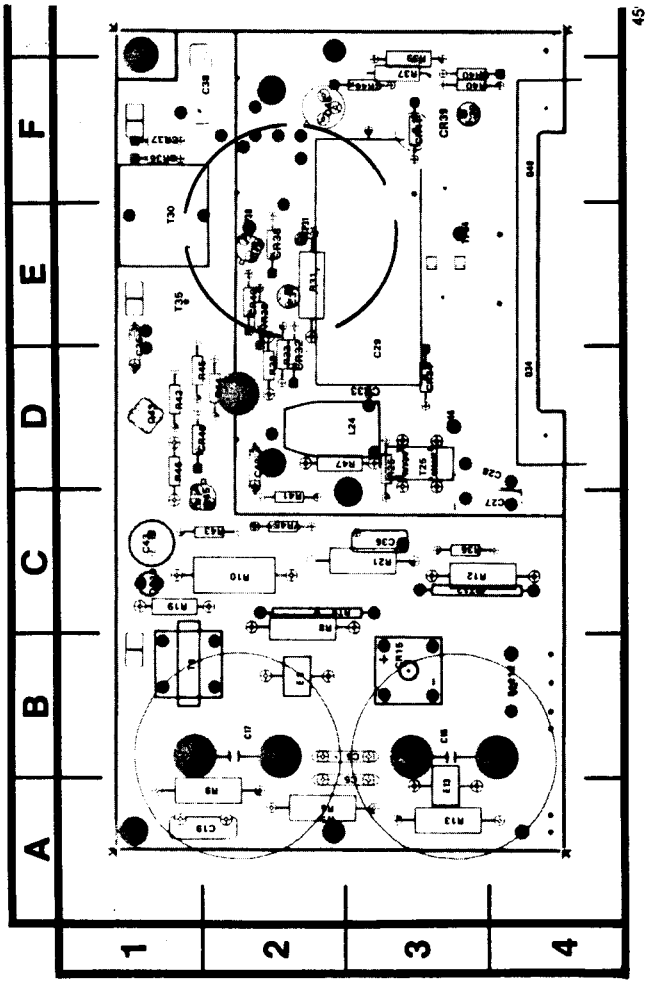

http://manoman.sqhill.com

Tektronix®
COMMITTED TO EXCELLENCE

MANUAL CHANGE INFORMATION

Date: 4-15-87 Change Reference: M61712

Product: 7934 Oscilloscope Manual Part No.: 070-5880-00

DESCRIPTION PG. 42

THESE CHANGES ARE EFFECTIVE AT SN B020529

MECHANICAL PARTS LIST CHANGES

CHANGE TO:

FIG. 3-44	378-2049-00	1	GRILL,FAN:3.07 DIA.

http://manoman.sqhill.com

Tektronix®
COMMITTED TO EXCELLENCE

MANUAL CHANGE INFORMATION

Date: 4/30/87 Change Reference: M62150

Product: 7934 Manual Part No.: 070-5880-00

DESCRIPTION PG.42

THESE CHANGES ARE EFFECTIVE AT SN B020535

REPLACEABLE ELECTRICAL PARTS LIST CHANGES

CHANGE TO:

A13	670-8622-05	CIRCUIT BD ASSY:READOUT
A13C3559	281-0797-00	CAP,FXD,CER,DI,15PF,10%,100V NOMINAL VALUE
A13C3559	281-0759-00	CAP,FXD,CER,DI,22PF,10%,100V SELECTABLE VALUE
A13C3559	281-0762-00	CAP,FXD,CER,DI,27PF,20%,100V SELECTABLE VALUE
A13C3559	281-0763-00	CAP,FXD,CER,DI,47PF,10%,100V SELECTABLE VALUE
A13C3559	281-0819-00	CAP,FXD,CER,DI,33PF,5%,50V SELECTABLE VALUE
A13C3597	281-0797-00	CAP,FXD,CER,DI,15PF,10%,100V NOMINAL VALUE
A13C3597	281-0759-00	CAP,FXD,CER,DI,22PF,10%,100V SELECTABLE VALUE
A13C3597	281-0762-00	CAP,FXD,CER,DI,27PF,20%,100V SELECTABLE VALUE
A13C3597	281-0763-00	CAP,FXD,CER,DI,47PF,10%,100V SELECTABLE VALUE
A13C3597	281-0819-00	CAP,FXD,CER,DI,33PF,5%,50V SELECTABLE VALUE
A13R3482	321-0756-00	RES,FXD,FILM,50K OHM,1%,0.125W
A13U3503	160-2997-01	MICROCKT,DGTL,4096 X 8 PROM,PRGM

ADD:

A13R3480	313-1103-00	RES,FXD,FILM,10K OHM,5%,0.2W

http://manoman.sqhill.com

DESCRIPTION

Figure 8-7. A13-Readout Circuit Board Assembly.

Board Location E-5 (Add R3480)

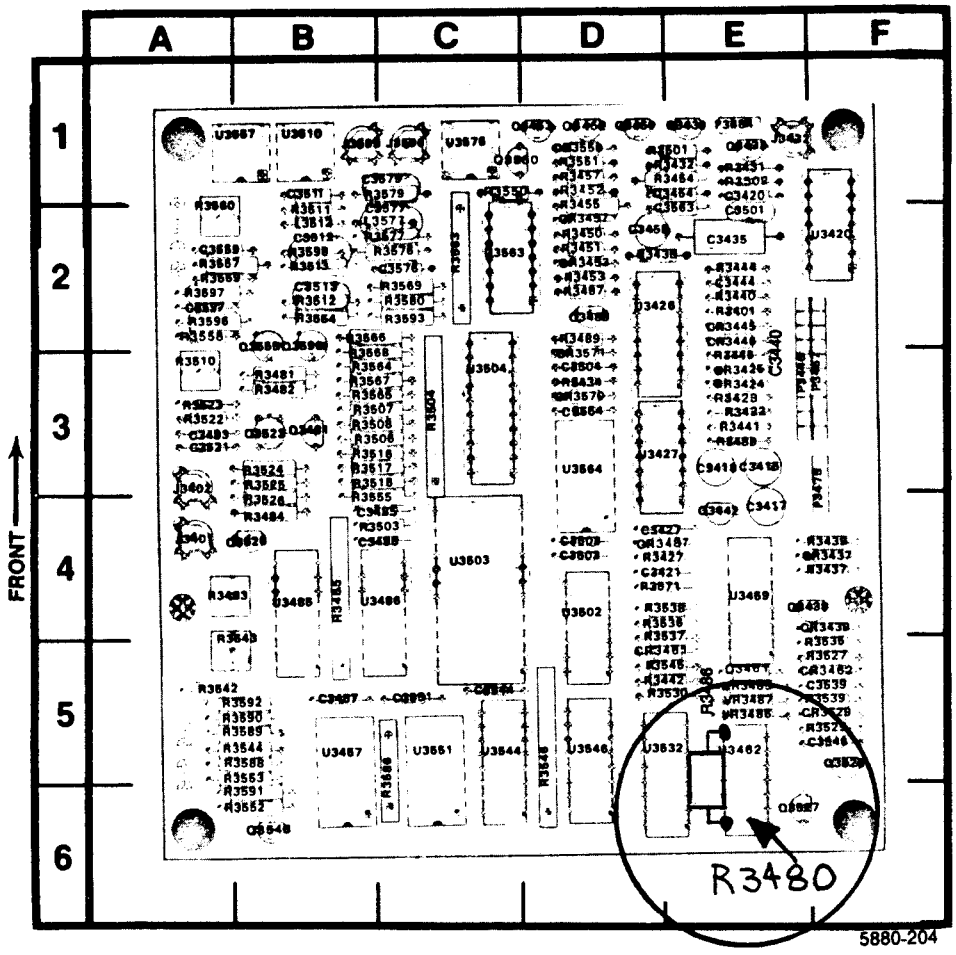

http://manoman.sqhill.com

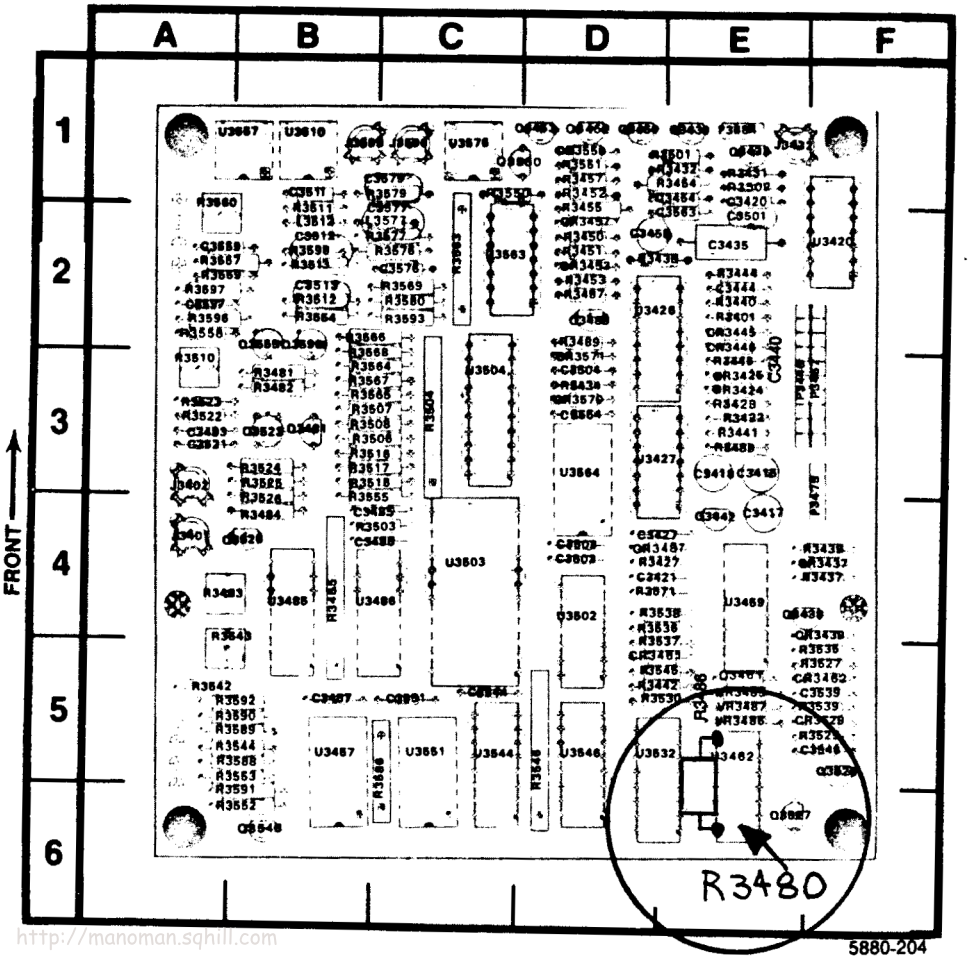
A
B
C
D
E
F
1
2
3
4
5
6
FRONT
R3480
U3607
U3610
U3676
U3420
U3426
U3427
U3464
U3469
U3503
U3504
U3486
U3487
U3651
U3644
U3646
U3632
U3462
C3435
C3440
R3483
R3485
R3486
R3503
R3504
R3510
R3560
R3563
R3648
R3666
R3678
R3679
R3680
R3693
R3696
R3697
R3698
R3699
R3701
R3702
R3703
R3704
R3705
R3706
R3707
R3708
R3709
R3710
R3711
R3712
R3713
R3714
R3715
R3716
R3717
R3718
R3719
R3720
R3721
R3722
R3723
R3724
R3725
R3726
R3727
R3728
R3729
R3730
R3731
R3732
R3733
R3734
R3735
R3736
R3737
R3738
R3739
R3740

Product 7934 Date: 4/30/87 Change Reference M62150

DESCRIPTION

Readout 6

Schematic Location D-3 (Add R3480)

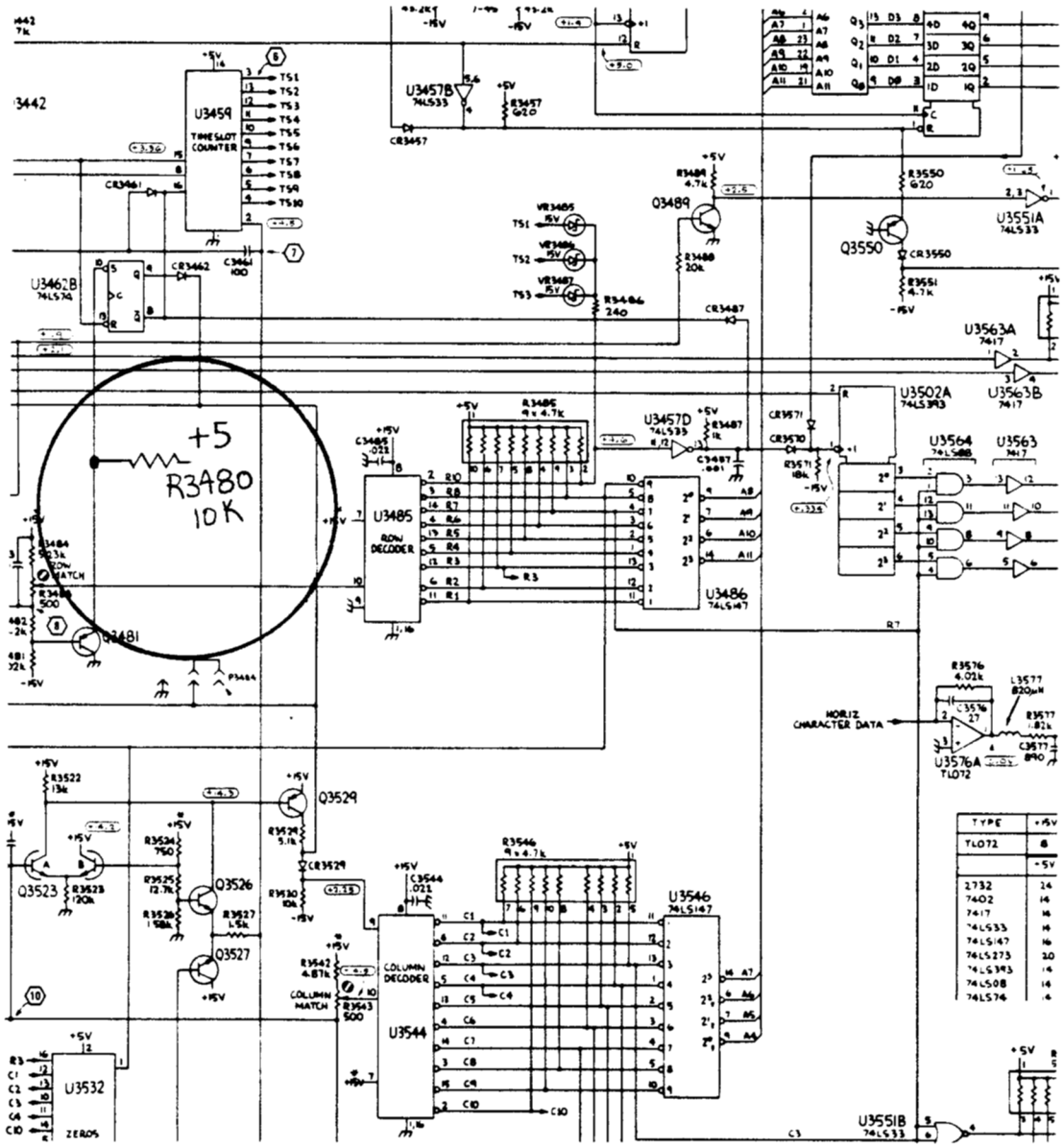

TYPE	+15V
TL072	8
	+5V
2732	24
7402	14
7417	14
74LS33	14
74LS147	16
74LS273	20
74LS393	14
74LS08	14
74LS74	14

http://manoman.sqhill.com

Tektronix® MANUAL CHANGE INFORMATION

COMMITTED TO EXCELLENCE

Date: 10/23/87 Change Reference: M64956

Product: 7934 Oscilloscope

Manual Part No.: 070-5880-00

PRODUCT GROUP CODE: 42

DESCRIPTION

These changes are effective at serial number B020715

REPLACEABLE ELECTRICAL PARTS LIST CHANGES

If the components listed for this change cannot be found in the Replaceable Electrical Parts List section of your manual, check for related change information at the rear of the manual.

CHANGE TO:

A13	670-8622-06	CIRCUIT BD ASSY:READOUT
CR3457	152-0322-00	SEMICOND DVC, DI:SCHOTTKY,SI,15V

DIAGRAM CHANGES

The above component is located in Assembly A13 and shown on diagram 6, Fig. 8-7.

CR3457
Change to: 152-0322-00
Move CR3457 anode to R3455

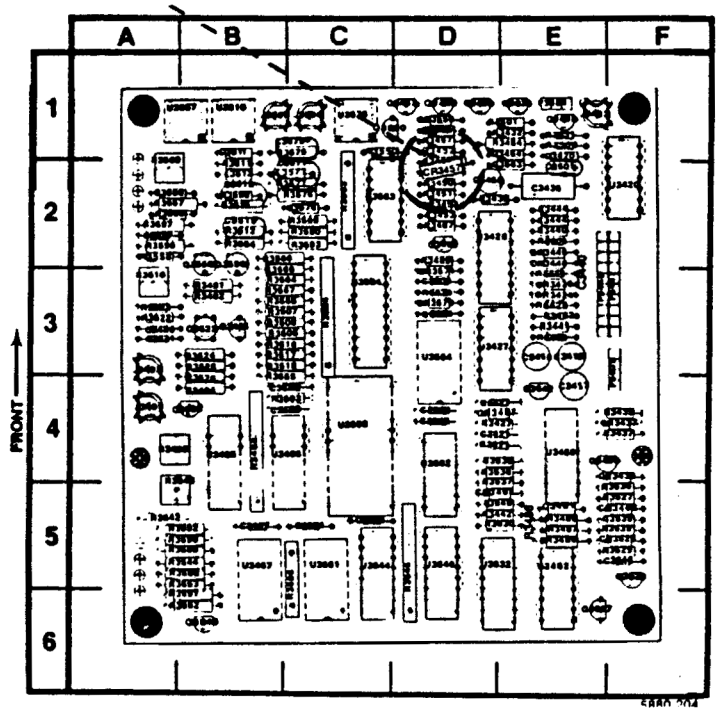

http://manoman.sqhill.com

CR3457

Change to: 152-0322-00

Move CR3457 anode to R3455

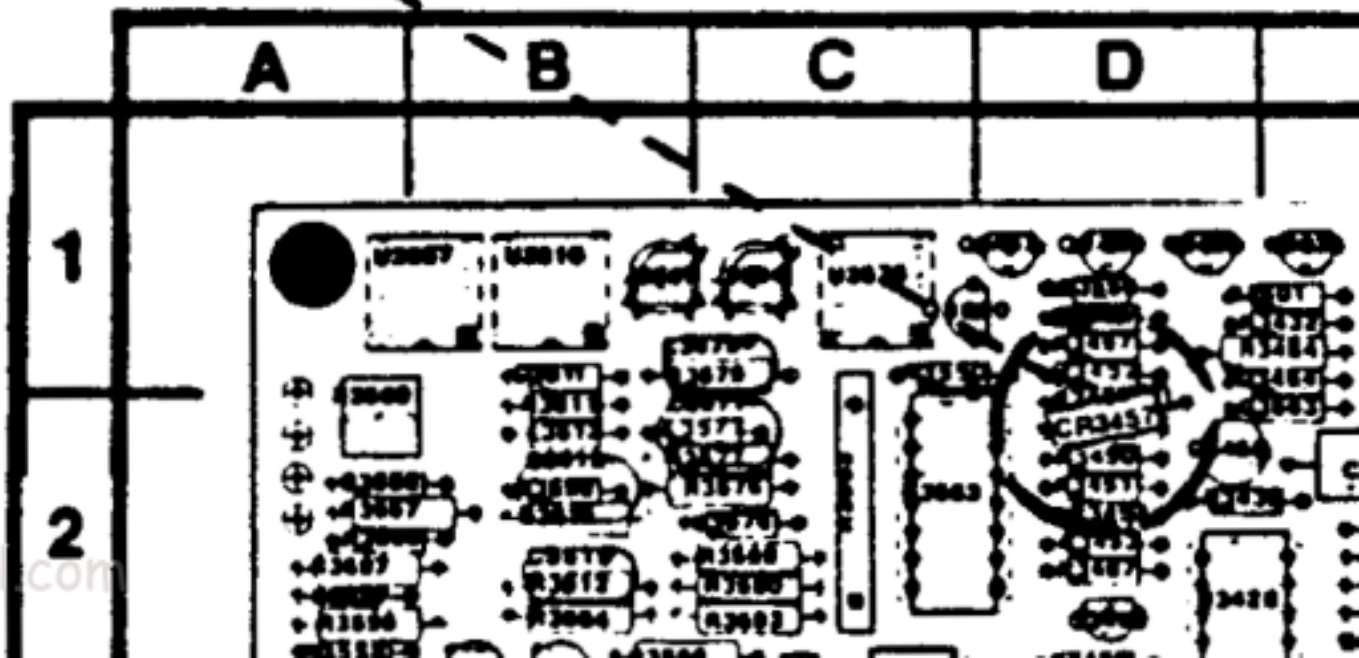

http://manoman.sqhill.com

Product: 7934 Oscilloscope Date: 10/23/87 Change Reference: M64956

These changes are effective at serial number B020715.

SCHEMATIC CHANGES

If the schematics indicated for change cannot be found in Section 8 of your manual, check for other change related information at the rear of the manual

READOUT 6

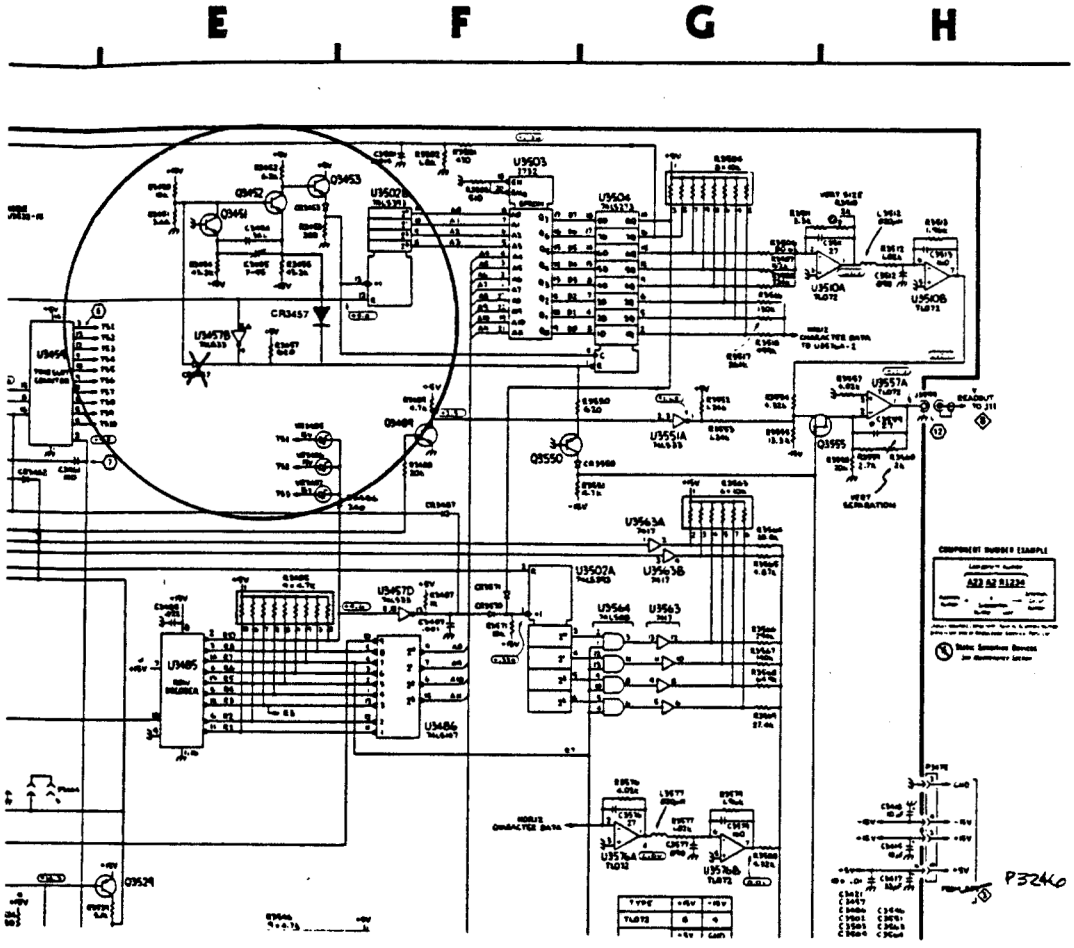

http://manoman.sqhill.com

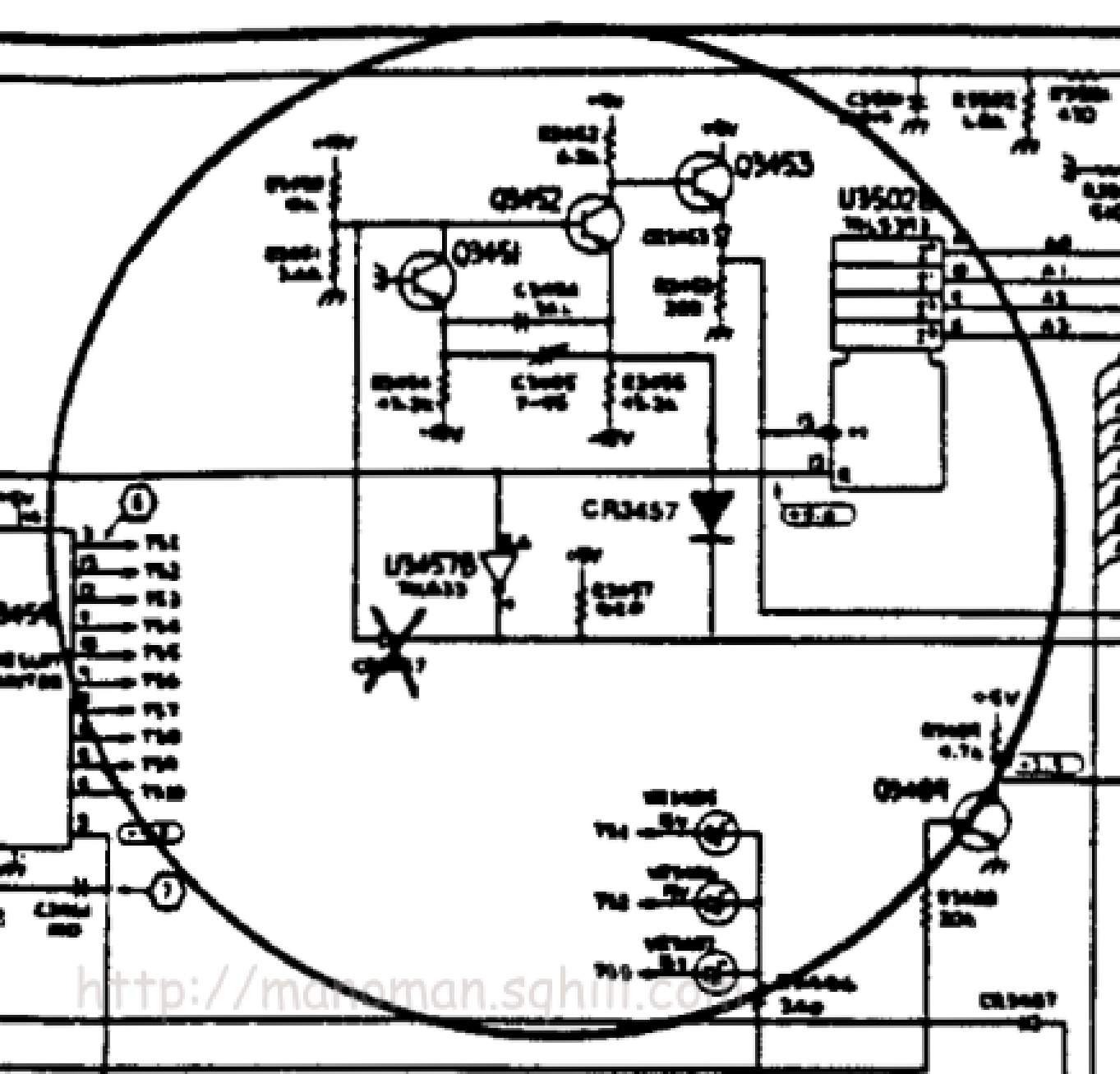
Q3453
Q3452
Q3451
U3502
CR3457
U3457B
Q3454
+5V
http://manuman.sqhill.com

Tektronix® COMMITTED TO EXCELLENCE

MANUAL CHANGE INFORMATION

Date: 10/9/87 Change Reference: M61143

Product: 7934 Oscilloscope

Manual Part No.: 070-5880-00

PRODUCT GROUP CODE: 42

DESCRIPTION

These changes are effective at serial number B020446

MECHANICAL PARTS LIST CHANGES

If the components indicated for change cannot be located in the Mechanical Parts List section of your manual, check for related change information at the rear of the manual.

CHANGE TO:

174-0138-01	CA ASSY, SP, ELEC:7, 26 AWG, 10.75 L (FROM A2P325 TO A17P1401, DS901, DS902)

http://manoman.sqhill.com

Tektronix® MANUAL CHANGE INFORMATION

COMMITTED TO EXCELLENCE

Date: 12/2/87 **Change Reference:** M65126

Product: 7934 OSCILLOSCOPE **Manual Part No.:** 070-5880-00

PRODUCT GROUP CODE: 42

DESCRIPTION

These changes are effective at serial number B020761.

ELECTRICAL PARTS LIST AND SCHEMATIC CHANGES

If the components listed for this change cannot be found in the Replaceable Electrical Parts List section of your manual, check for related change information at the rear of the manual.

CHANGE TO:

A20	670-9172-01	CIRCUIT BD ASSY:HORIZ AMP
A20R67	321-0289-00	RES,FXD,FILM:10K OHM,1%,0.125W

SCHEMATIC CHANGES

The above component is located in Assembly A20 and shown on diagram 10.

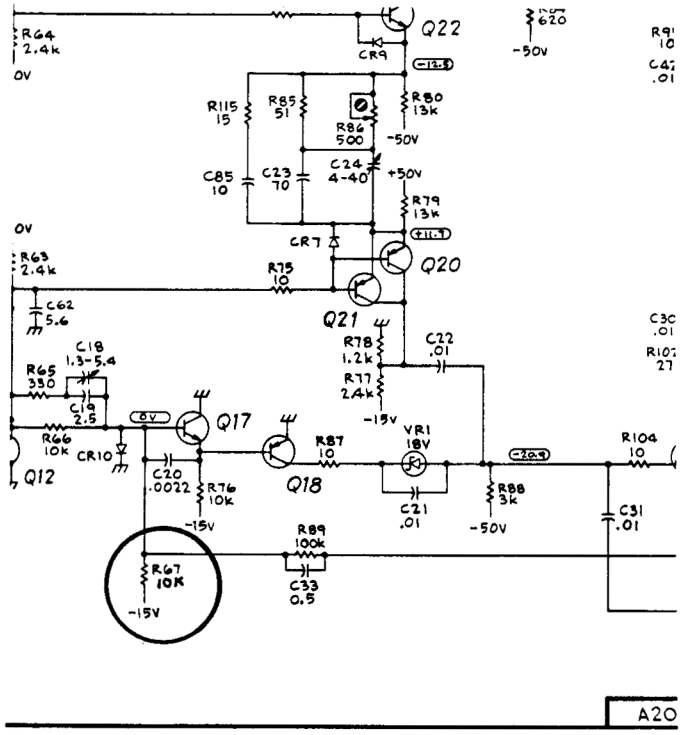

http://manoman.sqhill.com

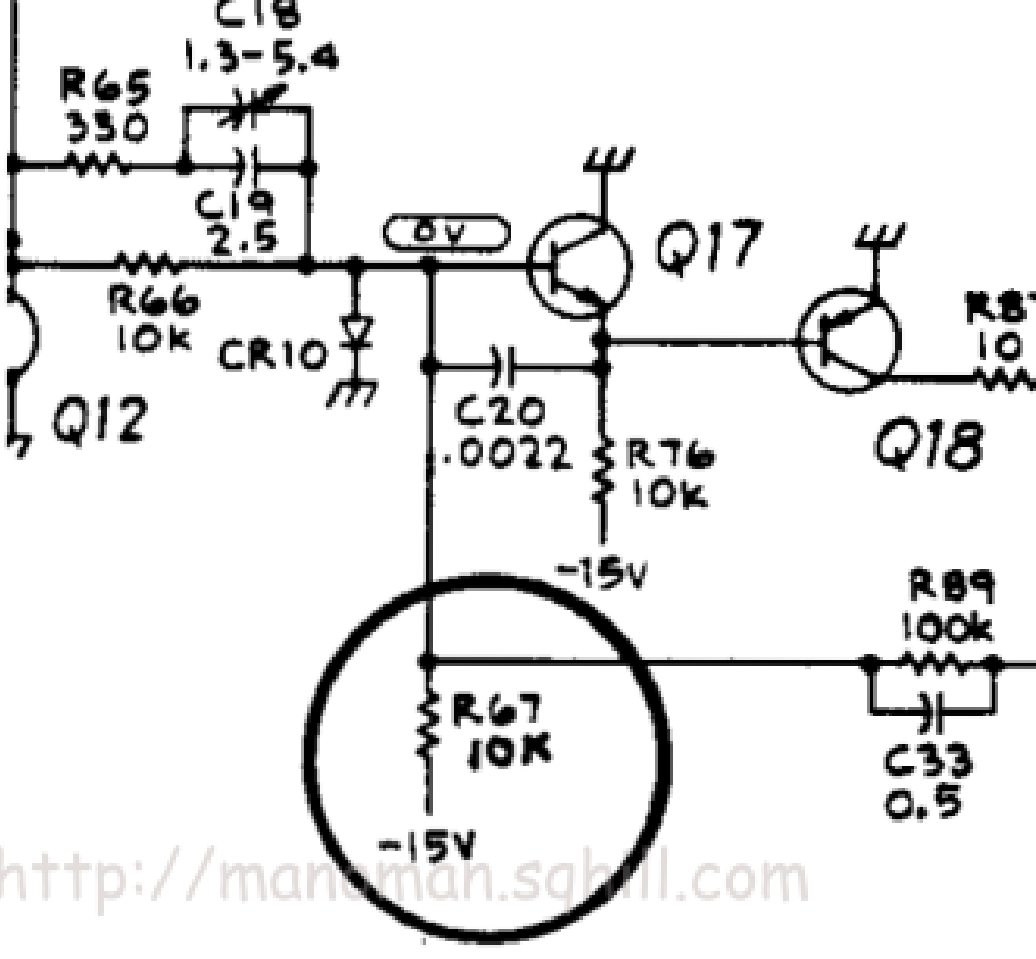

http://manuman.sghill.com

Tektronix
COMMITTED TO EXCELLENCE

MANUAL CHANGE INFORMATION

Date: 1/29/88 Change Reference: M65931

Product: 7934 OSCILLOSCOPE

Manual Part No.: 070-5880-00

Product Group Code: 42

DESCRIPTION

These changes are effective at serial number B020800.

REPLACEABLE ELECTRICAL PARTS LIST AND DIAGRAM CHANGES

If the components listed for this change cannot be found in the Replaceable Electrical Parts List section of your manual, check for related change information at the rear of the manual.

CHANGE TO:

Component No.	Tektronix Part No.	Name & Description
A7	670-9177-02	CIRCUIT BD ASSY:TRIGGER SELECT

ADD:

Component No.	Tektronix Part No.	Name & Description
C64	281-0770-00	CAP,FXD,CER DI:1000PF,20%,100V
C66	281-0770-00	CAP,FXD,CER DI:1000PF,20%,100V

http://manoman.sqhill.com

Product: 7934 OSCILLOSCOPE **Date:** 1/29/88 **Change Reference:** M65931

These changes are effective at serial number B020800.

DIAGRAM CHANGES

The components listed for change are added to Assembly A7 and shown on diagram 4

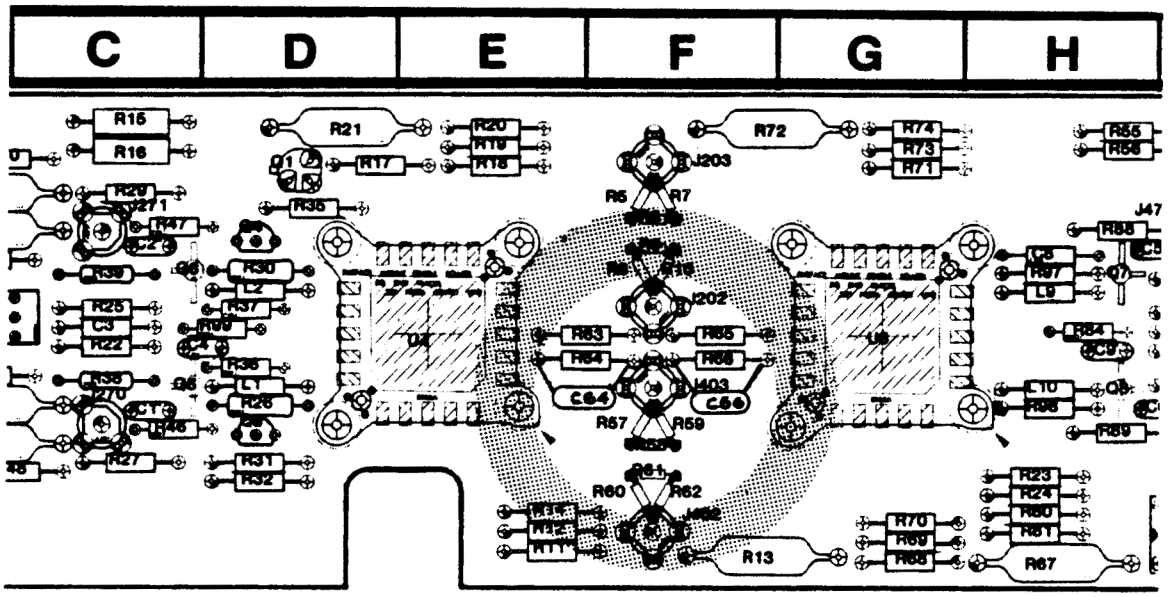

SCHEMATIC CHANGES

The components listed for change are added to Assembly A7 and shown on diagram 5

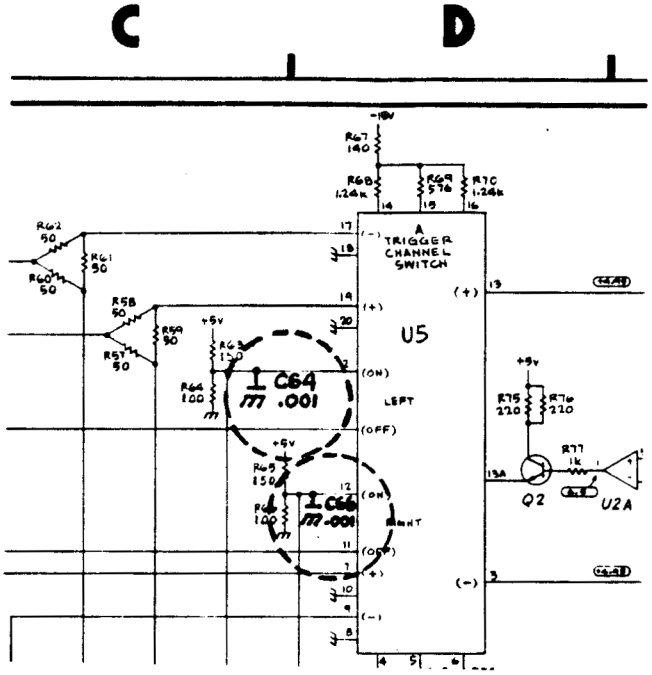

http://manoman.sqhill.com

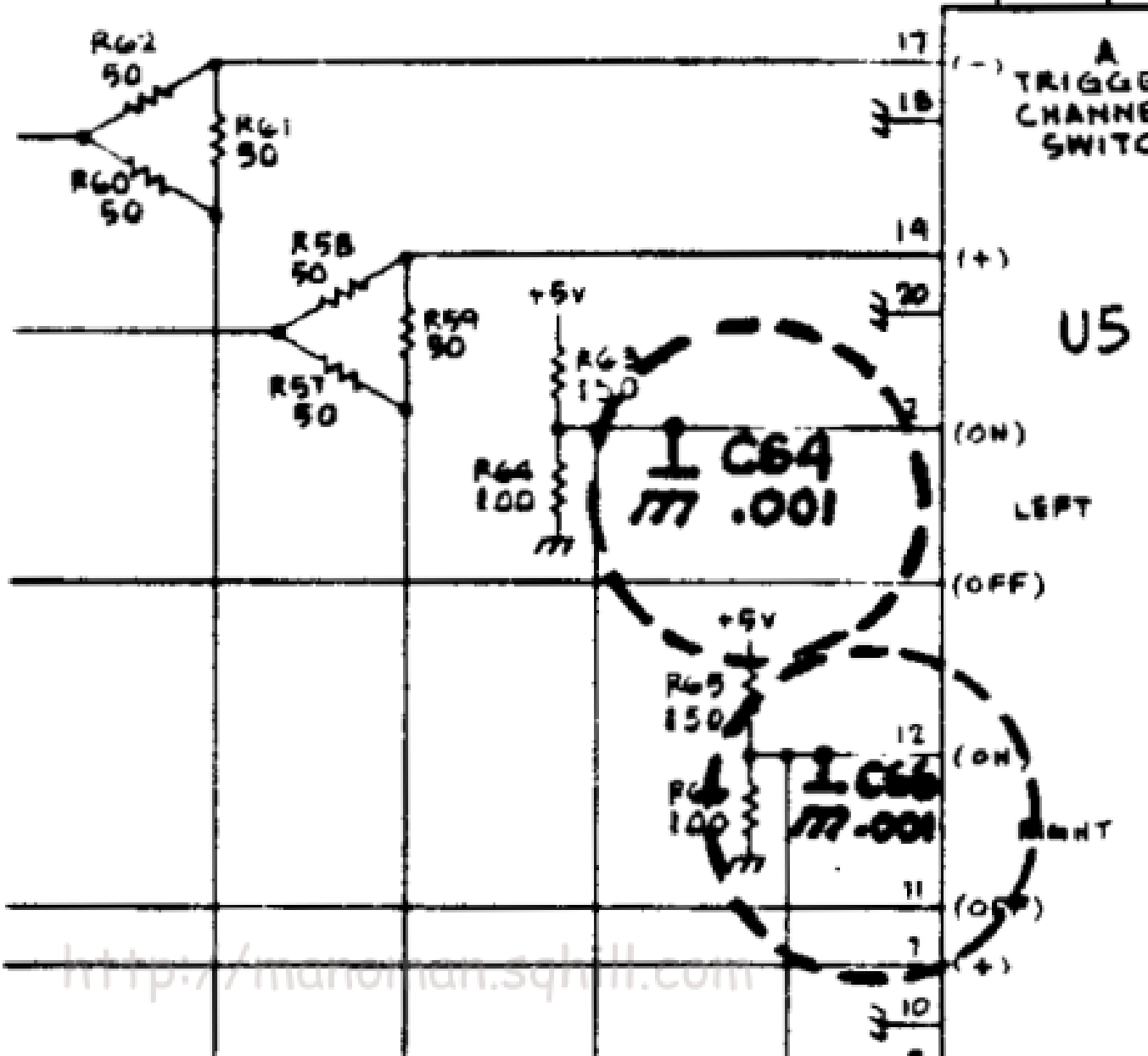

http://manoman.sqhill.com

Tektronix
COMMITTED TO EXCELLENCE

MANUAL CHANGE INFORMATION

Date: 2/2/88 Change Reference: M62771

Product: 7934 OSCILLOSCOPE Manual Part No.: 070-5880-00

Product Group Code: 42

DESCRIPTION

These changes are effective at serial number B020745.

REPLACEABLE ELECTRICAL PARTS LIST AND DIAGRAM CHANGES

If the components listed for this change cannot be found in the Replaceable Electrical Parts List section of your manual, check for related change information at the rear of the manual.

CHANGE TO:

Component No.	Tektronix Part No.	Name & Description
A14A1	670-5959-05	CIRCUIT BD ASSY:CONTROLLED RECTIFIER
A14A1VR88	152-1006-00	SEMICOND DVC,DI:ZEN,SI,9V,2%,500 MV,DO-7
A14A1R95	321-0418-00	RES,FXD,FILM:221K OHM,1%,0.125W,TC=TO

DIAGRAM AND SCHEMATIC CHANGES (Page 2 of 2)

http://manoman.sqhill.com

Product: 7934 OSCILLOSCOPE Date: 2/2/88 Change Reference: M62771

These changes are effective at serial number B020745.

The components listed for change are located on Assembly A14A1 and shown on Fig. 8-16 Control Rectifier Circuit Board Assembly.

12 Converter/ Rectifiers

DIAGRAM CHANGES

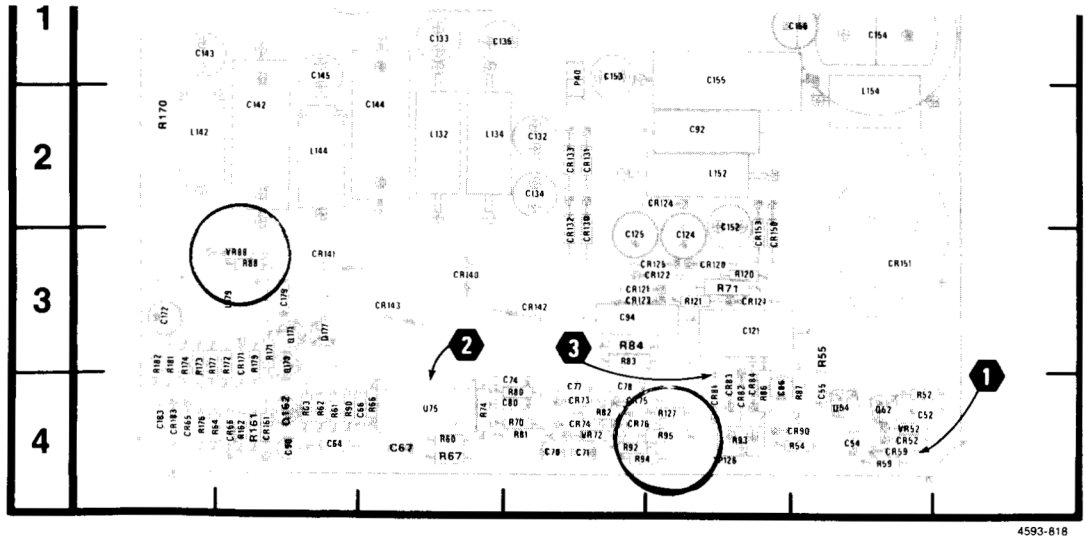

Figure 8-16. A14A1-Control Rectifier Circuit Board Assembly.

SCHEMATIC CHANGES

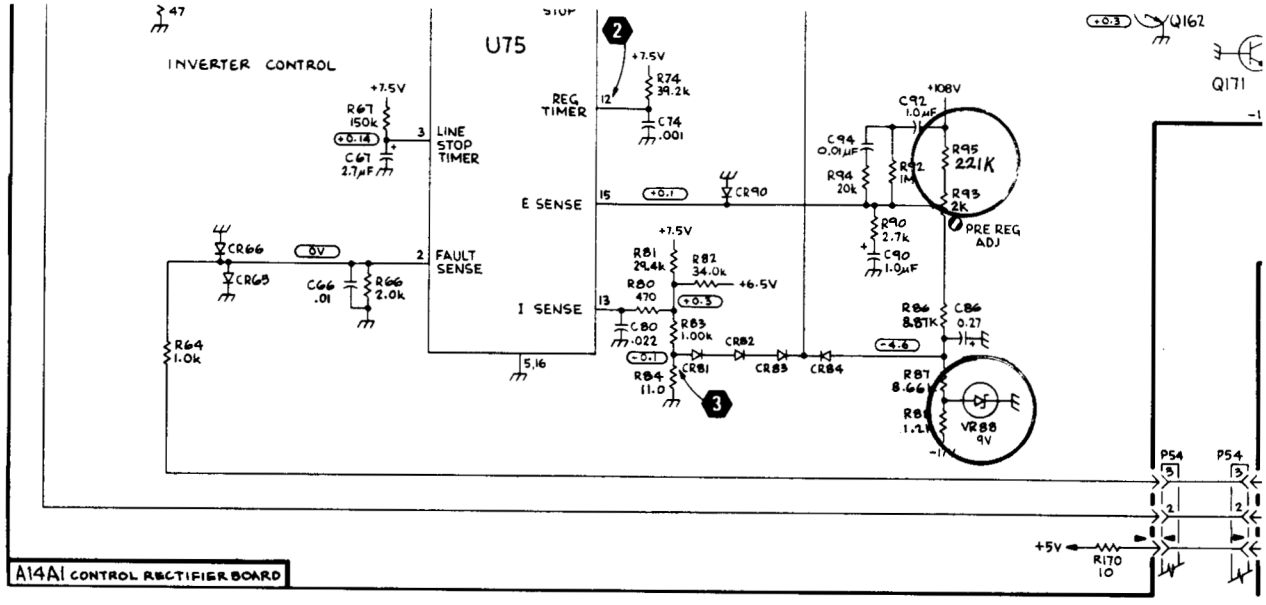

http://manoman.sqhill.com

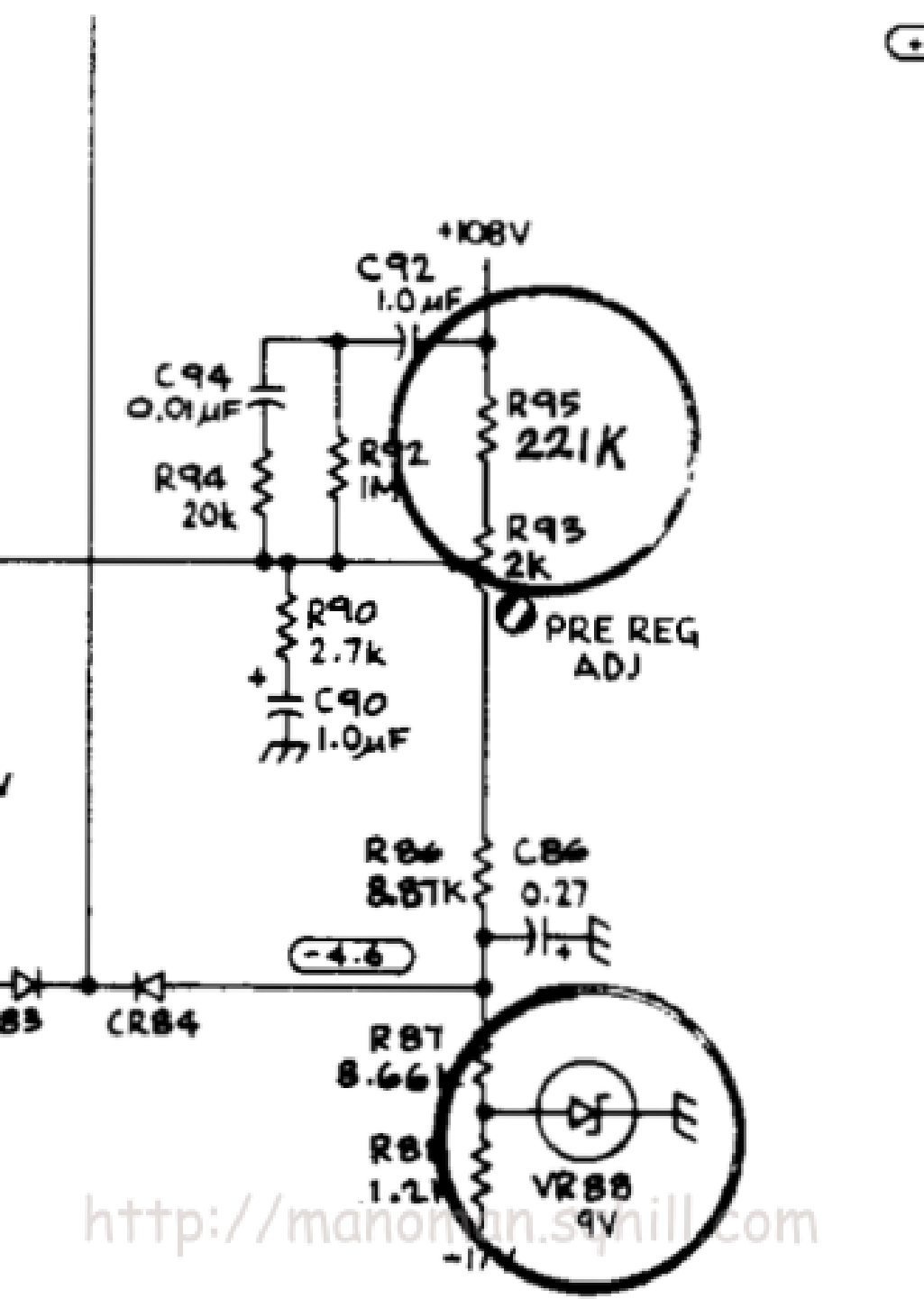
+108V
C92
1.0 µF
C94
0.01 µF
R94
20k
R92
1M
R95
221K
R93
2K
PRE REG
ADJ
R90
2.7k
C90
1.0µF
R86
8.87K
C86
0.27
-4.6
CR84
R87
8.66
R88
1.2
VR88
9V
http://manoman.spill.com

Tektronix
COMMITTED TO EXCELLENCE

MANUAL CHANGE INFORMATION

Date: 3/24/88 Change Reference: M66489

Product: 7934 OSCILLOSCOPE - SERVICE

Manual Part No.: 070-5880-00

Product Group Code: 42

DESCRIPTION

This change is effective at serial number B020841.

REPLACEABLE ELECTRICAL PARTS LIST AND DIAGRAM CHANGES

If the components listed for this change cannot be found in the Replaceable Electrical Parts List section of your manual, check for related change information at the rear of the manual.

CHANGE TO:

Component No.	Tektronix Part No.	Name & Description
A13	670-8622-07	CIRCUIT BD ASSY:READOUT
A13C3461	281-0812-00	CAP,FXD,CER DI:1000PF,10%,100V
A13C3539	281-0812-00	CAP,FXD,CER DI:1000PF,10%,100V
A13CR3461	152-0322-00	SEMICOND DVC,DI:SCHOTTKY,SI,15V,DO-35

REMOVE:

A13C3427	281-0773-00	CAP,FXD,CER DI:0.01UF,10%,100V

ADD:

A13Q3428	151-0190-00	TRANSISTOR:NPN,SI,TO-92
A13R3424	313-1103-00	RES,FXD,FILM:10K OHM,5%,0.2W
A13R3461	315-0102-00	RES,FXD,FILM:1K OHM,5%,0.25W
A13R3541	315-0102-00	RES,FXD,FILM:1K OHM,5%,0.25W

SCHEMATIC, DIAGRAM AND MECHANICAL PARTS LIST CHANGES FOLLOW

http://manoman.sqhill.com

Product: 7934 - SERVICE Date: 3/24/88 Change Reference: M66489

DIAGRAM CHANGES

READOUT 6

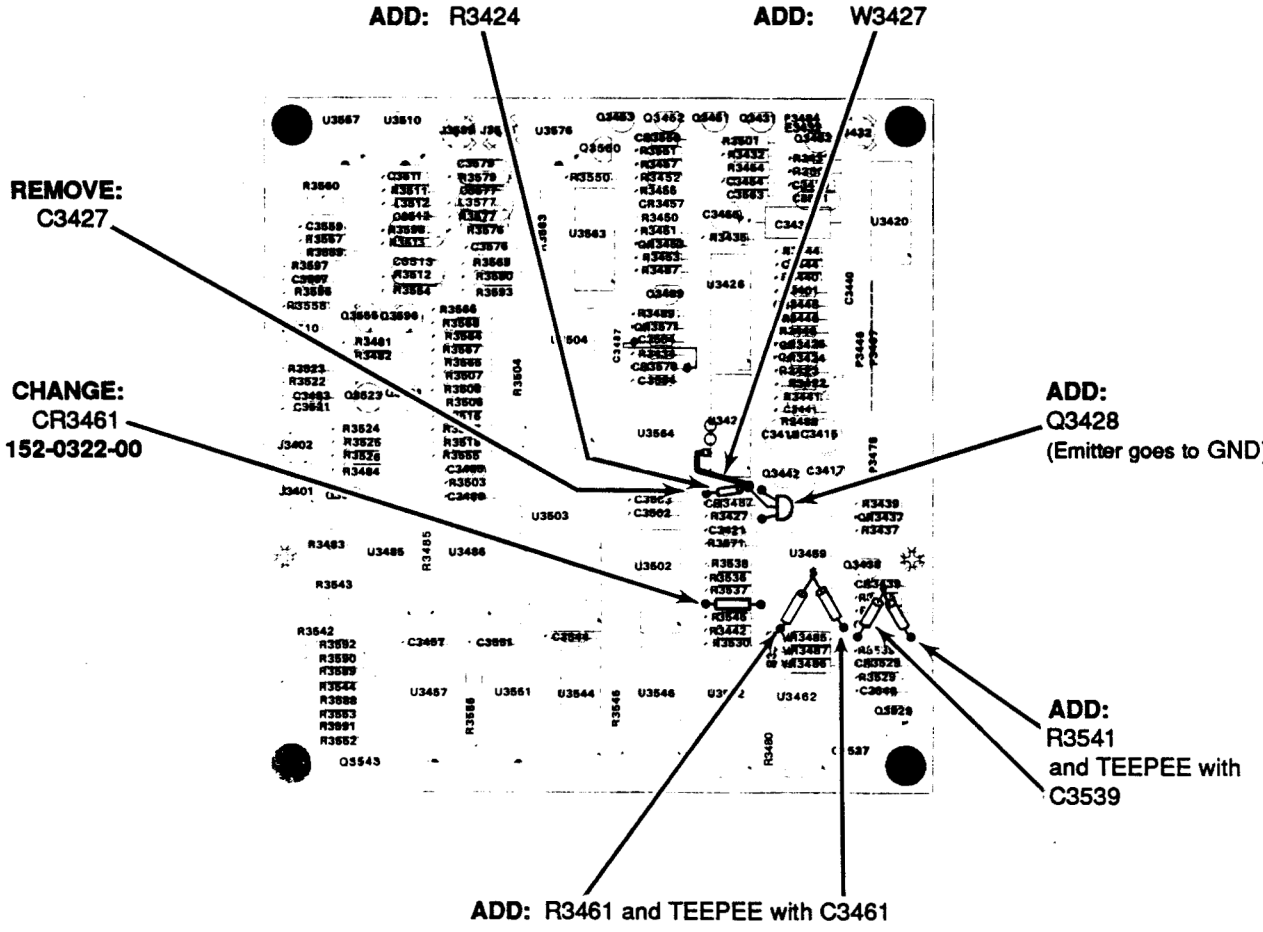

http://manoman.sqhill.com

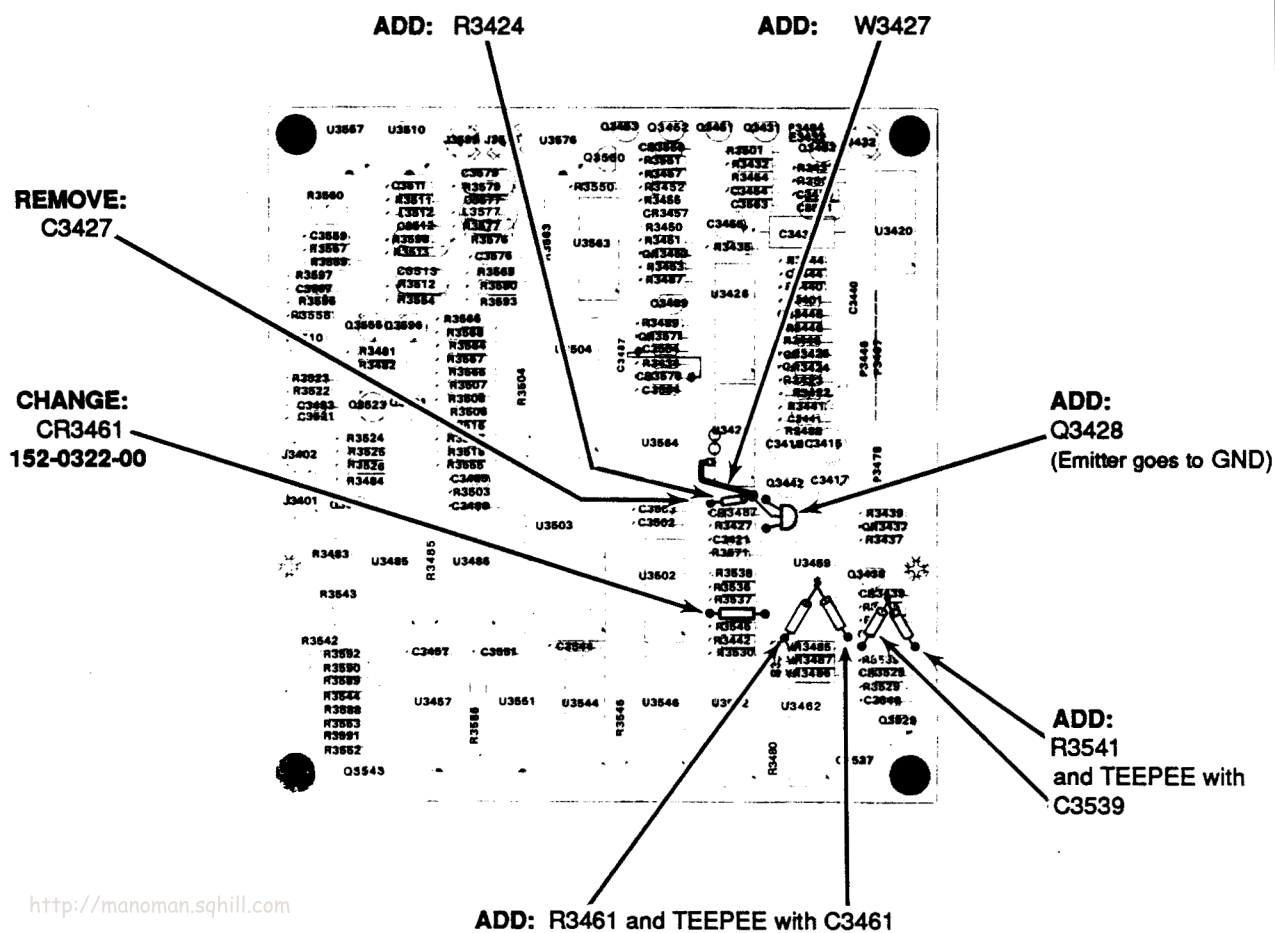

http://manoman.sqhill.com

Product: 7934 - SERVICE Date: 3/24/88 Change Reference: M66489

SCHEMATIC CHANGES

READOUT 6

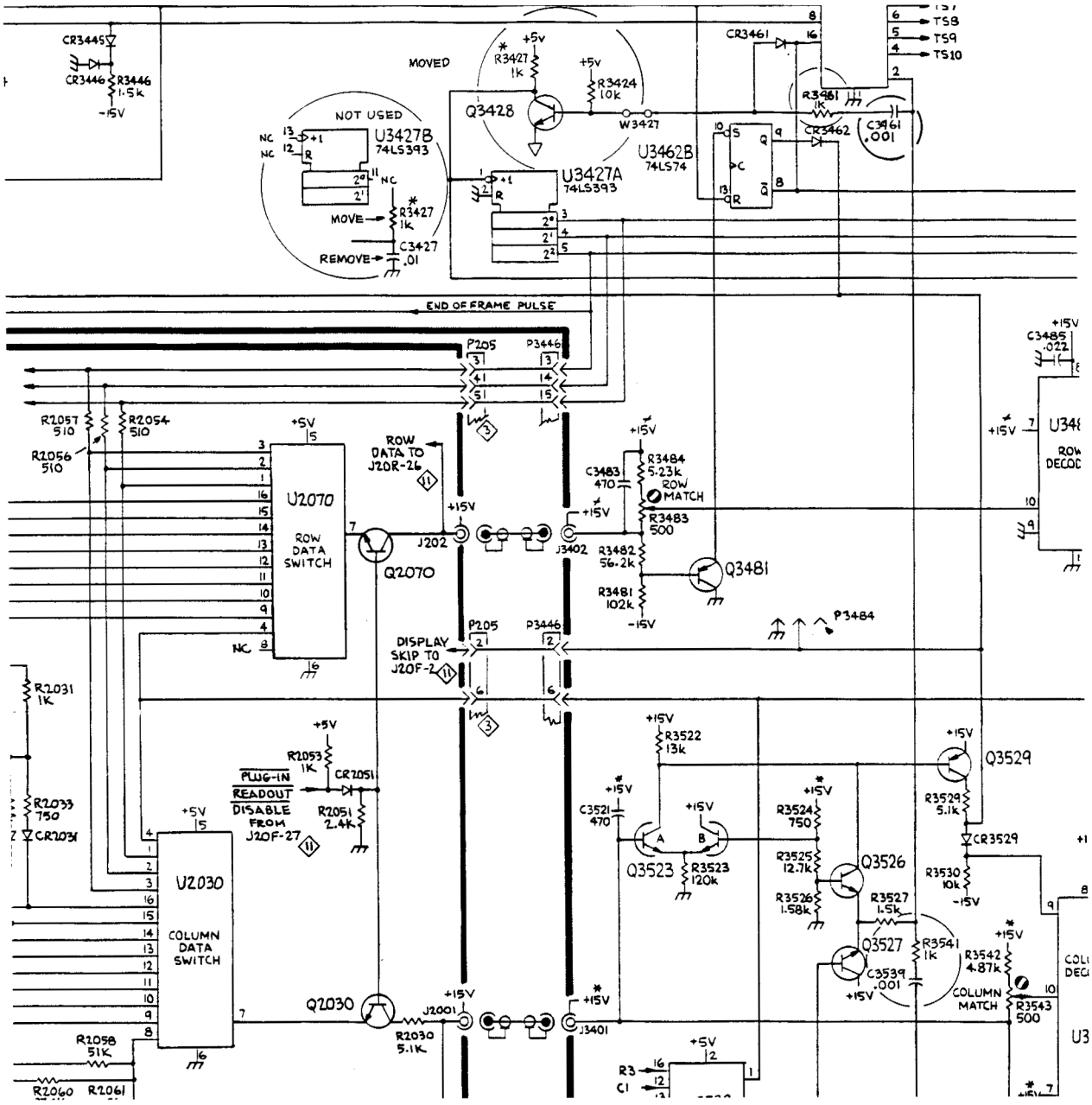

http://manoman.sqhill.com

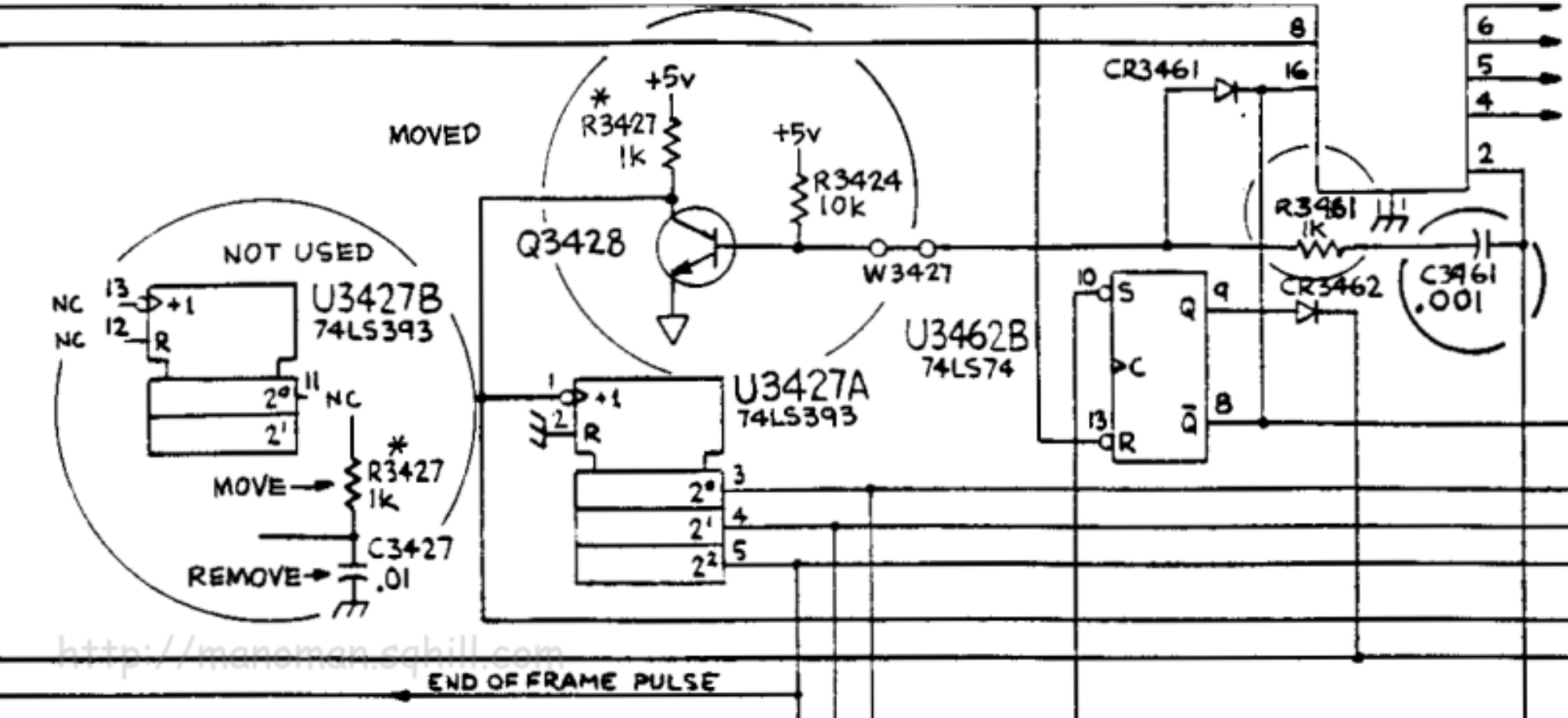

http://manoman.sqhill.com

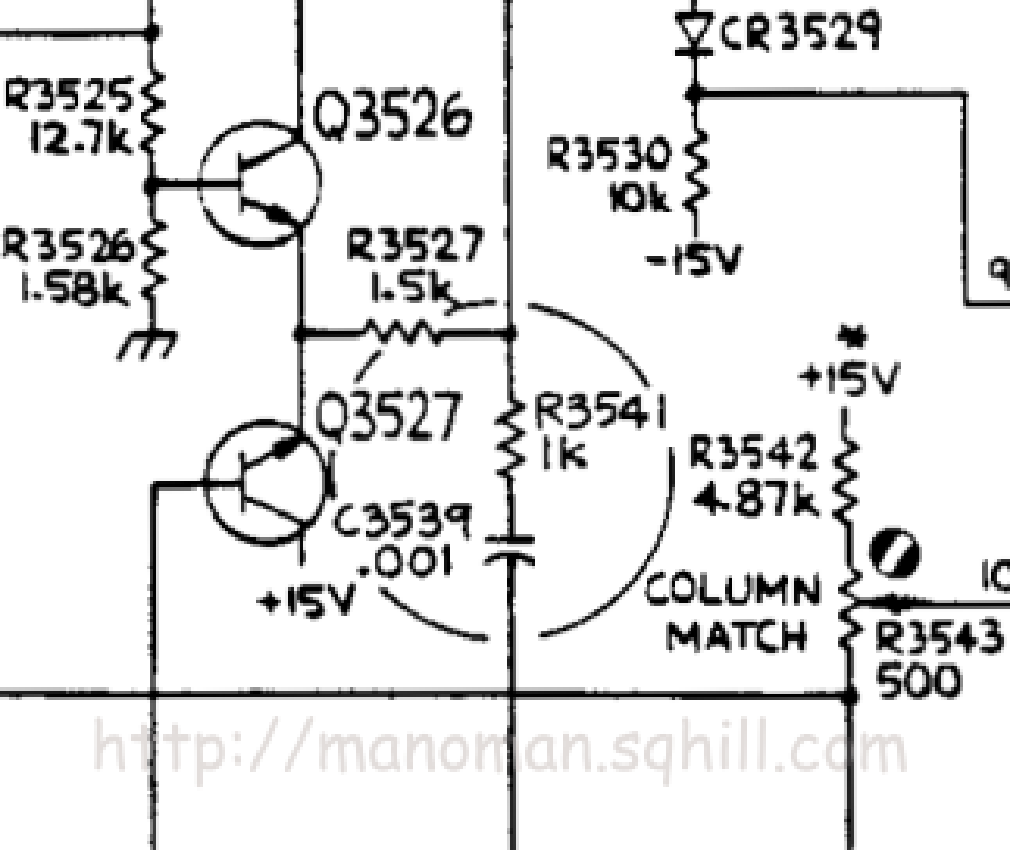

http://manoman.sqhill.com

Product: 7934 - SERVICE Date: 3/24/88 Change Reference: M66489

MECHANICAL PARTS LIST CHANGES

If the components listed for change cannot be located in the Replaceable Mechanical Parts List of your manual, check for related change information at the rear of the manual.

Fig. & Index No.	Tektronix Part No.	Qty	Name & Description
4-79	------ ----------	1	CIRCUIT BOARD ASSY:READOUT (SEE A13 REPL) (ATTACHING PARTS)
	195-2256-00	1	LEAD ELECTRICAL:26 AWG,1.5L,O-N

http://manoman.sqhill.com

Tektronix®
COMMITTED TO EXCELLENCE

MANUAL CHANGE INFORMATION

Date: 2/4/88 Change Reference: M64492

Product: 7934 OSCILLOSCOPE

Manual Part No.: 070-5880-00

Product Group Code: 42

DESCRIPTION

These changes are effective at serial number B020777.

REPLACEABLE ELECTRICAL PARTS LIST AND DIAGRAM CHANGES

If the components listed for this change cannot be found in the Replaceable Electrical Parts List section of your manual, check for related change information at the rear of the manual.

CHANGE TO:

Component No.	Tektronix Part No.	Name & Description
A7	670-9177-01	CIRCUIT BD ASSY:TRIGGER SELECT
A7C4	283-0175-00	CAP,FXD,CER,DI:10PF,5%,200V (NOMINAL VALUE SEL)
	283-0898-00	CAP,FXD,CER,DI:2.7PF,0.25%,50V (SELECTABLE)
A7Q5	151-0905-00	TRANSISTOR:PNP,SI,2GHZ, MICRO-X
A7Q6	151-0905-00	TRANSISTOR:PNP,SI,2GHZ, MICRO-X
A7Q7	151-0905-00	TRANSISTOR:PNP,SI,2GHZ, MICRO-X
A7Q8	151-0905-00	TRANSISTOR:PNP,SI,2GHZ, MICRO-X
A7R26	321-0041-00	RES,FXD,FILM:26 OHM,1%,0.25W
A7R30	321-0041-00	RES,FXD,FILM:26 OHM,1%,0.25W
A7R36	315-0200-00	RES,FXD,FILM:20 OHM,5%,0.25W
A7R37	315-0200-00	RES,FXD,FILM:20 OHM,5%,0.25W
A7R84	315-0820-00	RES,FXD,FILM:82 OHM,5%,0.25W (NOMINAL VALUE SEL)
A7R84	315-0101-00	RES,FXD,FILM:100 OHM,5%,0.25W (SELECTABLE)
A7R84	315-0121-00	RES,FXD,FILM:120 OHM,5%,0.25W (SELECTABLE)
A7R84	315-0220-00	RES,FXD,FILM:22 OHM,5%,0.25W (SELECTABLE)
A7R84	315-0270-00	RES,FXD,FILM:27 OHM,5%,0.25W (SELECTABLE)
A7R84	315-0330-00	RES,FXD,FILM:33 OHM,5%,0.25W (SELECTABLE)
A7R84	315-0430-00	RES,FXD,FILM:43 OHM,5%,0.25W (SELECTABLE)
A7R84	315-0560-00	RES,FXD,FILM:56 OHM,5%,0.25W (SELECTABLE)
A7R84	315-0680-00	RES,FXD,FILM:68 OHM,5%,0.25W (SELECTABLE)
A7R84	315-0750-00	RES,FXD,FILM:75 OHM,5%,0.25W (SELECTABLE)
A7R84	315-0820-00	RES,FXD,FILM:82 OHM,5%,0.25W (SELECTABLE)

http://manoman.sqhill.com

CHANGE TO: (continued)

Component No.	Tektronix Part No.	Name & Description
A7R99	315-0430-00	RES,FXD,FILM:43 OHM,5%,0.25W (NOMINAL VALUE SEL)
A7R99	315-0101-00	RES,FXD,FILM:100 OHM,5%,0.25W (SELECTABLE)
A7R99	315-0121-00	RES,FXD,FILM:120 OHM,5%,0.25W (SELECTABLE)
A7R99	315-0220-00	RES,FXD,FILM:22 OHM,5%,0.25W (SELECTABLE)
A7R99	315-0270-00	RES,FXD,FILM:27 OHM,5%,0.25W (SELECTABLE)
A7R99	315-0330-00	RES,FXD,FILM:33 OHM,5%,0.25W (SELECTABLE)
A7R99	315-0430-00	RES,FXD,FILM:43 OHM,5%,0.25W (SELECTABLE)
A7R99	315-0560-00	RES,FXD,FILM:56 OHM,5%,0.25W (SELECTABLE)
A7R99	315-0680-00	RES,FXD,FILM:68 OHM,5%,0.25W (SELECTABLE)
A7R99	315-0750-00	RES,FXD,FILM:75 OHM,5%,0.25W (SELECTABLE)
A7R99	315-0820-00	RES,FXD,FILM:82 OHM,5%,0.25W (SELECTABLE)

ADD:

A7C10	283-0158-00	CAP,FXD,CER,DI:1PF,+/-0.1PF,50V (NOMINAL VALUE SEL)
A7C10	283-0140-00	CAP,FXD,CER,DI:4.7PF,+/-0.25PF,50V (SELECTABLE)
A7C10	283-0185-00	CAP,FXD,CER,DI:2.5PF,0.5%,50V (SELECTABLE)
A7C10	283-0348-00	CAP,FXD,CER,DI:0.5PF,+/-0.1PF,100V (SELECTABLE)
A7C11	283-0181-00	CAP,FXD,CER,DI:1.8PF,+/-0.1%,100V (NOMINAL VALUE SEL)
A7C11	283-0140-00	CAP,FXD,CER,DI:4.7PF,+/-0.25PF,50V (SELECTABLE)
A7C11	283-0158-00	CAP,FXD,CER,DI:1PF,+/-0.1PF,50V (SELECTABLE)
A7C11	283-0185-00	CAP,FXD,CER,DI:2.5PF,0.5%,50V (SELECTABLE)
A7C11	283-0348-00	CAP,FXD,CER,DI:0.5PF,+/-0.1PF,100V (SELECTABLE)

http://manoman.sqhill.com

Product: 7934 OSCILLOSCOPE Date: 2/4/88 Change Reference: M64492

ADD: (continued)

A7R101	322-3097-00	RES,FXD,FILM:100 OHM,1%,0.25W (NOMINAL VALUE SEL)
A7R101	322-3039-00	RES,FXD,FILM:24.9 OHM,1%,0.25W (SELECTABLE)
A7R101	322-3072-00	RES,FXD,FILM:54.9 OHM,1%,0.25W (SELECTABLE)
A7R101	322-3089-00	RES,FXD,FILM:82.5 OHM,1%,0.25W (SELECTABLE)
A7R101	322-3105-00	RES,FXD,FILM:121 OHM,1%,0.25W (SELECTABLE)
A7R101	322-3114-00	RES,FXD,FILM:150 OHM,1%,0.25W (SELECTABLE)

DIAGRAM CHANGES

TRIGGER SELECTOR 5

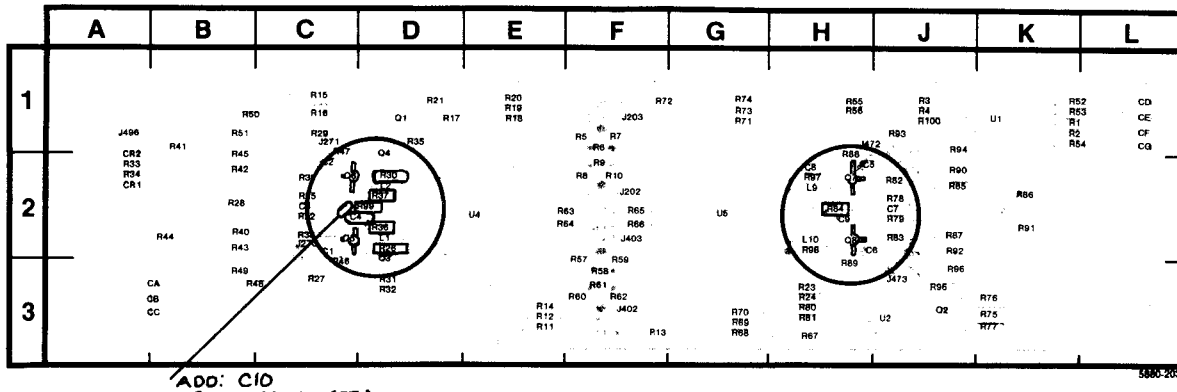

ADD: C10
283-0158-00 (SEL)

Figure 8-6. A7-Trigger Selector Circuit Board Assembly.

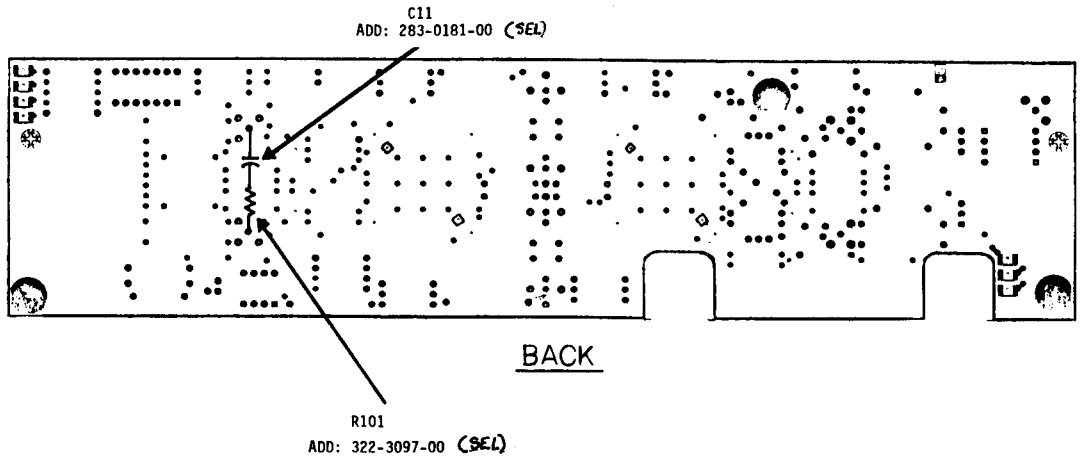

http://manoman.sqhill.com

Product: 7934 OSCILLOSCOPE Date: 2/4/88 Change Reference: M64492

SCHEMATIC CHANGES

TRIGGER SELECT 5

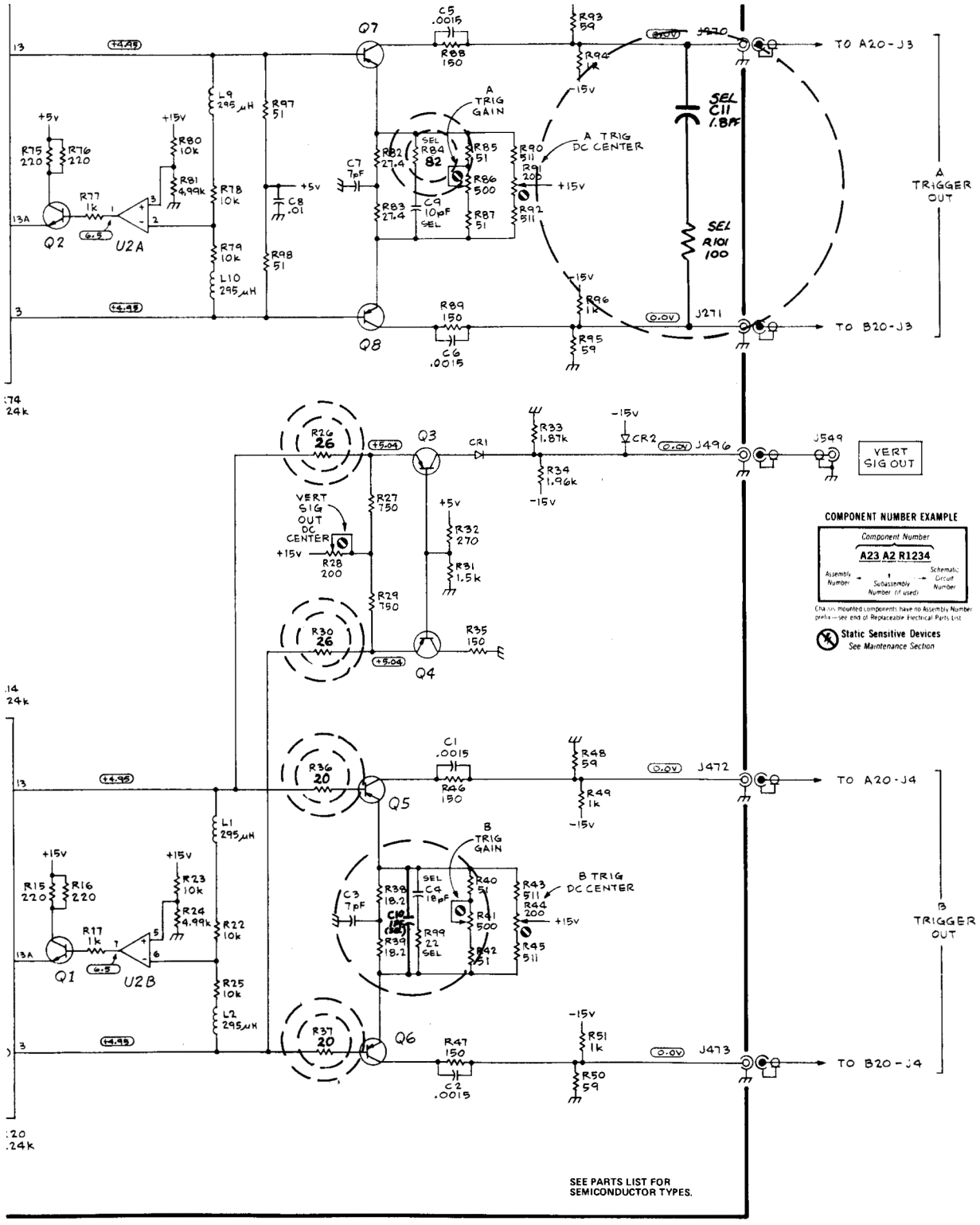

TRIGGER SELECTOR 5

http://manoman.sqhill.com

Tektronix®
COMMITTED TO EXCELLENCE

MANUAL CHANGE INFORMATION

Date: 11-OCT-91 **Change Reference:** M75422

Product: 7934 Instruction Manual **Manual Part No.:** 070-5880-00

DESCRIPTION **Product Group 42**

EFFECTIVE FOR SERIAL NUMBERS B021351 AND ABOVE

Change Replaceable Electrical Parts to:

A7	670-9177-05	CIRCUIT BD ASSY: TRIGGER SELECT
A7C4	283-0159-00	CAP,FXD,CER DI:18PF,5%,50V
A7Q5 A7Q6 A7Q7 A7Q8	151-0905-02	TRANSISTOR:SIG,BIPOLAR,PNP;15V,30MA, 50 GHZ, AMP;BFQ51C,4PW CER MICRO-X PKG
A7R38 A7R39	321-0022-00	RES,FXD,FILM:16.5 OHM,1%.0.125W
A7R40 A7R42	315-0270-00	RES,FXD,FILM:27 OHM,5%.0.25W
A7R82 A7R83	321-0037-00	RES,FXD,FILM:23.7 OHM,1%.0.125W

REMOVE:

A7C10	283-0158-00	CAP,FXD,CER DI:1PF,+/-0.1PF,50V

ADD:

* A7C12	283-0181-00	CAP,FXD,CER DI:1.8PF,+/-0.1%,100V
* A7R102	315-0101-00	RES,FXD,FILM:100 OHM,5%,0.25W

*These components to be added to the back of the Trigger board

http://manoman.sqhill.com

Schematic Diagram

TRIGGER SELECT 5

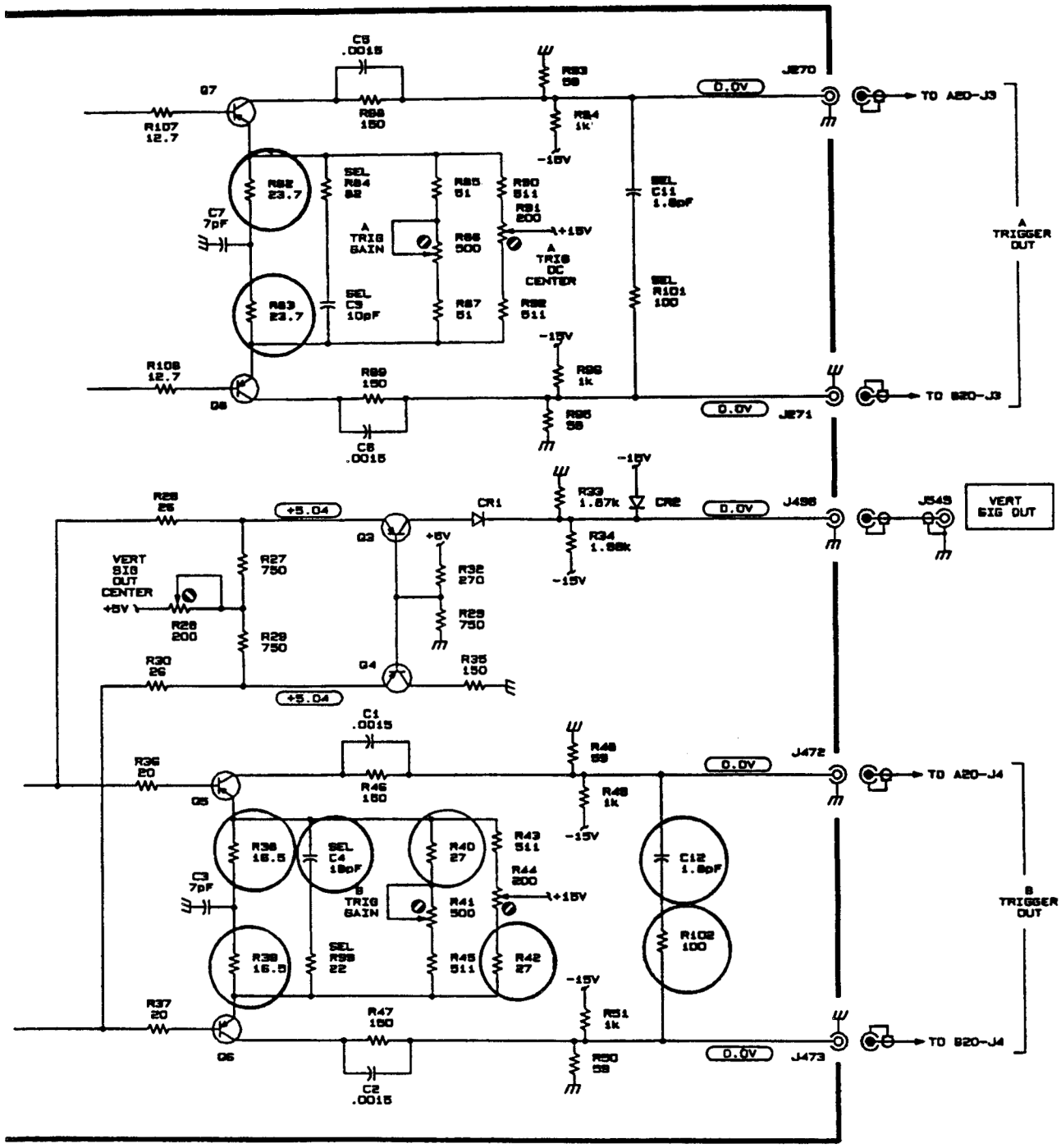

http://manoman.sqhill.com

Tektronix®
COMMITTED TO EXCELLENCE

MANUAL CHANGE INFORMATION

Date: 19-Feb-92 **Change Reference:** M76066

Product: 7934 Instruction Manual **Manual Part No.:** 070–5880-00

DESCRIPTION **Product Group 42**

EFFECTIVE FOR SERIAL ALL NUMBERS B021375 AND ABOVE

Replace the following pages in the manual:

D. Trigger System, pages 6-16 through 6-20.
Replaceable Electrical Parts, pages 7-18, 7-19, 7-20 and add page 7–21.
Schematic pages, Trigger Selector 5, assembly A7.

http://manoman.sqhill.com

D. TRIGGER SYSTEM

Equipment Required: (Numbers correspond to those listed in Table 5-3, Test Equipment.)

1. Test Oscilloscope
2. or 3. Amplifier
4. Time-Base (two required)
9. Plug-in Extender (rigid calibration fixture)
10. Signal Standardizer
12. Coaxial Cable (one 18-inch required)
13. Coaxial Cable (two 42-inch required)
19. Tool, Alignment

D1. TRIGGER SYSTEM PRELIMINARY SETUP

a. Perform the Adjustment and Performance Check Power-Up Sequence.

b. Refer to Section 6, Instrument Options, and the Change Information at the rear of this manual for any modifications which may affect this procedure.

c. See the **TEST POINT AND ADJUSTMENT LOCATIONS D** foldout page in Section 8, Diagrams and Circuit Board Illustrations.

d. Set the 7934 controls as follows:

POWER switch ..... On
VERTICAL MODE ..... RIGHT
VERT TRACE SEPARATION (B) ..... Midrange
A TRIGGER SOURCE ..... VERT MODE
A INTENSITY ..... Fully counterclockwise
HORIZONTAL MODE ..... A
B INTENSITY ..... Fully counterclockwise
B TRIGGER SOURCE ..... VERT MODE
FOCUS ..... Midrange
READOUT INTENSITY ..... OFF (in detent)
GRAT ILLUM ..... Midrange
BEAMFINDER ..... Pushbutton out

D2. ADJUST A TRIGGER SELECTOR CENTERING (A7R255, AR270, A7R274, A7R279)

NOTE

First perform step D1, then proceed.

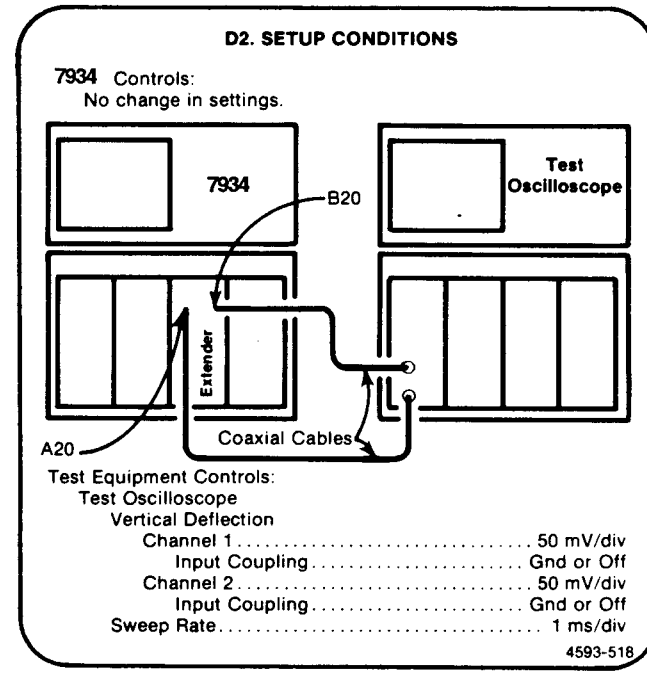

a. Within the plug-in extender, disconnect the top connector on the left and right sides (labeled A20 and B20). Connect each female connector to one of the test oscilloscope channels with the 42-inch 50-ohm coaxial cables and 50-ohm bnc terminations (omit the 50-ohm bnc terminations if the test oscilloscope has a 50-ohm input impedance).

b. Set the test oscilloscope for differential operation between the two channels (added display mode with one channel inverted).

c. Establish a ground reference level for the test oscilloscope by positioning the trace to the center horizontal line of the graticule. Do not change the test oscilloscope Position controls after setting this ground reference.

http://manoman.sqhill.com

d. Set both channels of the test oscilloscope for dc input coupling.

e. **EXAMINE**—the test oscilloscope display for a dc level within 1 division (50 millivolts) of the ground reference level in the LEFT, RIGHT, and ADD positions of the VERTICAL MODE switch.

f. **ADJUST**—the A DC Center adjustment, R255 (on the A7 Trigger Selector Board) for a dc level within 1 division (50 millivolts) of the ground reference level in the LEFT, RIGHT, and ADD positions of the VERTICAL MODE switch.

g. Install the signal standardizer in the 7934 LEFT VERT compartment.

h. Set the VERTICAL MODE switch to LEFT.

i. Set the signal standardizer Test selector to Trigger +Step Resp, and the Rep Rate to 1kHz. Use the signal standardizer Position and Amplitude controls to center a 6-division display on the test oscilloscope. Set the test oscilloscope sweep rate to 0.5 millisecond/division.

j. **EXAMINE**—the test oscilloscope display for less than +3% and -3% aberrations.

k. **ADJUST**—the A Thermal adjustment, R270 (on the A7 Trigger Selector Board) for optimum square wave displayed on the test oscilloscope.

l. Set the signal standardizer Test selector to Trigger Gain and the Rep Rate to 1 MHz. Use the signal standardizer Position control to move the bright trace display on the test oscilloscope to the center graticule line.

m. **EXAMINE**—the test oscilloscope display for nine traces with six divisions of vertical deflection between the center seven traces, within 0.6 division (300 millivolts, within 30 millivolts).

n. **ADJUST**—the A Gain adjustment, R274 (on the A7 Trigger Selector Board) for a test oscilloscope display of six divisions of deflection between the center seven traces, within 0.6 division (300 millivolts, within 30 millivolts).

o. Remove the signal standardizer from the LEFT VERT compartment.

p. Set the test oscilloscope to alternate between channel 1 and channel 2. Re-establish a ground reference for both channels of the test oscilloscope. Then set both channels for dc coupling.

q. **EXAMINE**—the test oscilloscope display for a dc level within 1 division (50 millivolts) of the established ground reference.

r. **ADJUST**—the A DC Common Mode adjustment, R279 (on the A7 Trigger Selector Board) for a dc level within 1 division of ground.

http://manoman.sqhill.com

D3. ADJUST B TRIGGER SELECTOR CENTERING AND GAIN (A7R455, A7R474, AR479)

NOTE

If the preceding step was not performed, first perform step D1, then proceed.

D3. SETUP CONDITIONS

7934 Controls:
No change in settings.

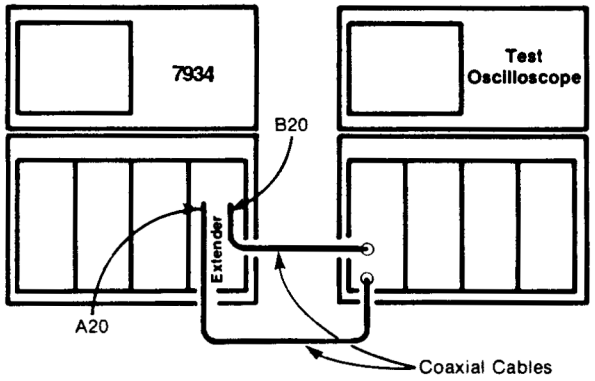

Test Equipment Controls:
Test Oscilloscope
Vertical Deflection
Channel 1 ..... 50 mV/div
Input Coupling ..... Gnd or Off
Channel 2 ..... 50 mV/div
Input Coupling ..... Gnd or Off
Sweep Rate ..... 1 ms/div

4593-519

a. Set the test oscilloscope for differential operation between the two channels (added display mode with one channel inverted).

b. Establish a ground reference level for the test oscilloscope by positioning the trace to the center horizontal line of the graticule. Do not change the test oscilloscope Position controls after setting this ground reference.

c. Within the plug-in extender, disconnect the top connector on the left and right sides (labeled A20 and B20). Connect each female connector to one of the test oscilloscope channels with the 42-inch 50-ohm coaxial cables and 50-ohm bnc terminations (omit the 50-ohm bnc terminations if the test oscilloscope has a 50-ohm input impedance).

d. Set both channels of the test oscilloscope for dc input coupling.

e. **EXAMINE**—test oscilloscope display for a dc level within 1 division (50 millivolts) of the ground reference level in the LEFT, RIGHT, and ADD positions of the 7934. VERTICAL MODE switch.

f. **ADJUST**—B DC Center adjustment, R455 (on the A7 Trigger Selector Board) for a dc level within 1 division (50 millivolts) of the ground reference level in the LEFT, RIGHT, and ADD positions of the VERTICAL MODE switch.

g. Install the signal standardizer in the LEFT VERT compartment.

h. Set the VERTICAL MODE switch to LEFT.

i. Set the signal standardizer Test Selector to Trigger Gain and the Rep Rate to 1 MHz. Use the signal standardizer Position control to align the bright trace displayed on the test oscilloscope with the center graticule line.

j. **EXAMINE**—the test oscilloscope display for nine traces with six divisions of vertical deflection between the center seven traces, within 0.6 division (300 millivolts, within 30 millivolts).

k. **ADJUST**—B Gain adjustment, R474 (on the A7 Trigger Selector Board) for a test oscilloscope display of six divisions of deflection between the center seven traces, within 0.6 division.

l. Remove the signal standardizer from the LEFT VERT compartment.

m. Set the test oscilloscope to alternate between channel 1 and channel 2. Re-establish a ground reference for both channels of the test oscilloscope. Then set both channels for dc coupling.

n. **EXAMINE**—the test oscilloscope display for a dc level within 1 division (50 millivolts) of the established ground references (both traces).

o. **ADJUST**—the B DC Common Mode adjustment, R479 (on the A7 Trigger Selector Board) for dc levels within 1 division of ground (both traces).

p. **INTERACTION**—the adjustment of R479, R474, and R455 may interact. Repeat step D3 if necessary.

http://manoman.sqhill.com

D4. CHECK/ADJUST VERTICAL SIGNAL OUT DC CENTERING (A7R485, A7R480, A7R490)

NOTE

If the preceding step was not performed, first perform step D1, then proceed.

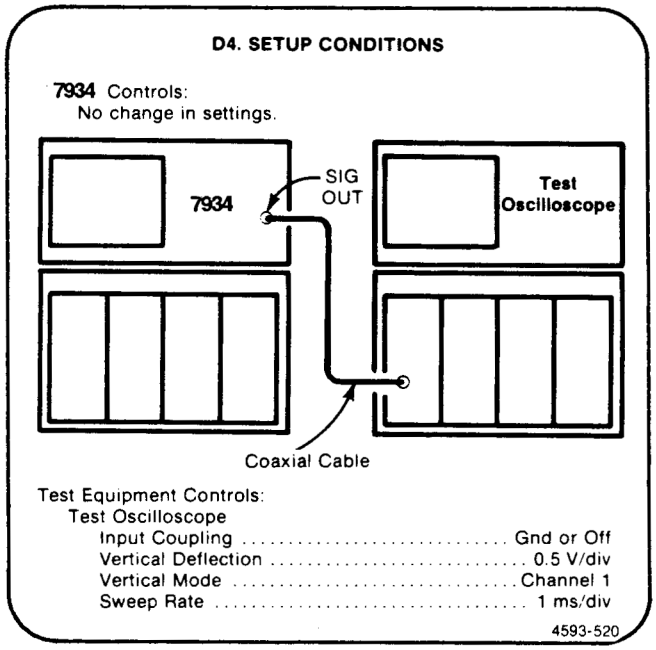

a. Establish a ground reference for the test oscilloscope by positioning the trace to the graticule center line. Do not change the test oscilloscope Position control after setting this ground reference.

b. Connect the front-panel SIG OUT connector to the vertical input of the test oscilloscope with the 42-inch, 50-ohm coaxial cable.

c. Set the test oscilloscope input coupling switch to dc.

d. **CHECK**—test oscilloscope display for a dc level within 1 division of the ground reference established in part a.

e. **ADJUST**—Signal Out DC Center adjustment, R485 (on the A7 Trigger Selector Board) for a dc level within 1 division of the ground reference level.

f. Install the signal standardizer in the LEFT VERT compartment.

g. Set the Test selector to Trigger +Step Resp and the Rep Rate to 1 kHz.

h. Rotate the signal standardizer Position and Amplitude controls to display a six-division triggered signal on the test oscilloscope.

i. **EXAMINE**—the test oscilloscope square-wave display for optimum flat top within 0.1 division.

j. **ADJUST**—the Signal Out Thermal 1 adjustment R480 (on the A7 Trigger Selector Board) to optimize the test oscilloscope square-wave display.

k. Set the signal standardizer Rep Rate to 10 kHz.

l. Set the test oscilloscope sweep rate to 50 microseconds/division.

m. **EXAMINE**—the test oscilloscope square-wave display for a flat top, within 0.2 division.

n. **ADJUST**—the Signal Out Thermal 2 adjustment, R490 (on the A7 Trigger Selector Board) to optimize test oscilloscope square-wave display.

http://manoman.sqhill.com

D5. CHECK TRIGGER SELECTOR OPERATON

NOTE

If the preceding step was not performed, first perform step D1, then proceed.

D5. SETUP CONDITIONS

7934 Controls:
- VERTICAL MODE ..... LEFT
- HORIZONTAL MODE ..... A
- A TRIGGER SOURCE ..... VERT MODE
- B TRIGGER SOURCE ..... VERT MODE

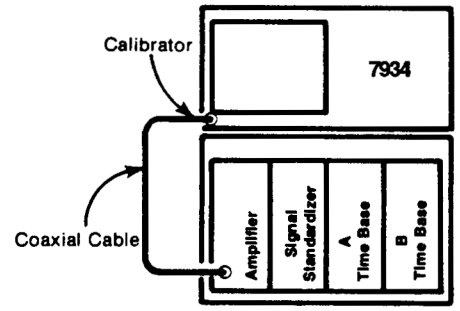

Test Equipment Controls:

Signal Standardizer
- Test ..... Vert or Horiz + Step Resp
- Rep Rate ..... 10 kHz

A Time Base
- Sweep Rate ..... 0.2 ms/div
- Triggering ..... Auto, AC, Internal
- Magnifier X1
- Mode ..... Independent

B Time Base
- Sweep Rate ..... 0.2 ms/div
- Triggering ..... Auto, AC, Internal
- Magnifier X1
- Mode ..... Independent

4593-521

a. Set the A INTENSITY control for a visible display. Set the amplifier for a 2-division display in the upper half of the graticule area. Use the A time-base Triggering Level control to trigger the display.

b. Set the VERTICAL MODE switch to RIGHT.

c. Set the signal standardizer Amplitude and Position controls for a 2 division display in the lower half of the graticule area.

d. Set the VERTICAL MODE switch to ALT.

e. **CHECK**—the crt display for 1 kHz and 10 kHz triggered waveforms (adjust the time-base unit Triggering Level controls as necessary).

f. Set the VERTICAL MODE switch to ADD.

g. **CHECK**—the crt display for a triggered waveform.

h. Set the VERTICAL MODE switch to CHOP.

i. **CHECK**—the crt for a stable display of the 1 kHz waveform only.

j. Set the A TRIGGER SOURCE switch to LEFT VERT.

k. **CHECK**—sequentially select all positions of the VERTICAL MODE switch and check for a stable display of only the 1 kHz waveform.

l. Set the A TRIGGER SOURCE switch to RIGHT VERT.

m. **CHECK**—sequentially select all positions of the VERTICAL MODE switch and check for a stable display of only the 10 kHz waveform.

n. Set the VERTICAL MODE switch to ALT, the HORIZONTAL MODE switch to B, and the B INTENSITY control for a visible display.

o. **CHECK**—the crt display for 1 kHz and 10 kHz triggered waveforms.

p. Set the VERTICAL MODE switch to ADD.

q. **CHECK**—crt for a stable display.

r. Set the VERTICAL MODE switch to CHOP.

s. **CHECK**—crt for a stable display of only the 1 kHz waveform.

t. Set the B TRIGGER SOURCE switch to LEFT VERT.

u. **CHECK**—sequentially select all positions of the VERTICAL MODE switch and check for a stable display of only the 1 kHz waveform.

v. Set the B TRIGGER SOURCE switch to RIGHT VERT.

w. **CHECK**—sequentially select all positions of the VERTICAL MODE switch and check for a stable display of only the 10 kHz waveform.

x. Set the VERTICAL MODE switch to ALT, the HORIZONTAL MODE switch to ALT, and the A and B TRIGGER SOURCE switches to VERT MODE.

y. **CHECK**—that the B HORIZ time-base is triggered on the 1 kHz waveform and the A HORIZ time-base is triggered on the 10 kHz waveform (set the time base Triggering Level controls for triggered sweeps).

http://manoman.sqhill.com

Component Number	Tektronix Part No.	Serial No. Effective	Dscont	Name & Description	Mfr. Code	Mfr. Part No.
A7	670-4776-04			CIRCUIT BD ASSY:TRIGGER SELECT	80009	670-4776-04
A7C237	283-0221-00			CAP,FXD,CER DI:0.47UF,20%,50V	04222	SR305C474MAA
A7C240	290-0183-00			CAP,FXD,ELCTLT:1UF,10%,35V	31433	T322B105K035AS
A7C250	290-0525-00			CAP,FXD,ELCTLT:4.7UF,20%,50V	31433	T355G475M050AS
A7C270	283-0177-00			CAP,FXD,CER DI:1UF,+80-20%,25V	04222	SR305E105ZAA
A7C440	290-0527-00			CAP,FXD,ELCTLT:15UF,20%,20V	31433	T355F156M020AS
A7C447	283-0221-00			CAP,FXD,CER DI:0.47UF,20%,50V	04222	SR305C474MAA
A7C450	290-0488-00			CAP,FXD,ELCTLT:2.2UF,10%,20V	31433	T322B225K020AS
A7C483	283-0260-00			CAP,FXD,CER DI:5.6PF,+/-0.25PF,200V	04222	SR152A5R6CAA
A7C483	283-0168-00			CAP,FXD,CER DI:12PF,5%,100V	04222	SR151A120JAA
A7C483	283-0159-00			CAP,FXD,CER DI:18PF,5%,50V	04222	SR155A180JAA
A7C483	283-0201-00			CAP,FXD,CER DI:27PF,10%,200V (C483 IS SELECTABLE)	04222	SR152C270KAA
A7C486	281-0775-00			CAP,FXD,CER DI:0.1UF,20%,50V	04222	SA105E104MAA
A7C487	283-0111-00			CAP,FXD,CER DI:0.1UF,20%,50V	04222	SR215C104MAA
A7C488	281-0775-00			CAP,FXD,CER DI:0.1UF,20%,50V	04222	SA105E104MAA
A7C490	283-0339-00			CAP,FXD,CER DI:0.22UF,10%,50V	04222	SR305C224KAA
A7C493	283-0260-00			CAP,FXD,CER DI:5.6PF,+/-0.25PF,200V	04222	SR152A5R6CAA
A7C493	283-0168-00			CAP,FXD,CER DI:12PF,5%,100V	04222	SR151A120JAA
A7C493	283-0159-00			CAP,FXD,CER DI:18PF,5%,50V	04222	SR155A180JAA
A7C493	283-0201-00			CAP,FXD,CER DI:27PF,10%,200V (C493 IS SELECTABLE)	04222	SR152C270KAA
A7J202	131-1003-00			CONN,RF JACK:PCB,PELTOLA, FEMALE	80009	131-1003-00
A7J203	131-1003-00			CONN,RF JACK:PCB,PELTOLA, FEMALE	80009	131-1003-00
A7J270	131-1003-00			CONN,RF JACK:PCB,PELTOLA, FEMALE	80009	131-1003-00
A7J271	131-1003-00			CONN,RF JACK:PCB,PELTOLA, FEMALE	80009	131-1003-00
A7J402	131-1003-00			CONN,RF JACK:PCB,PELTOLA, FEMALE	80009	131-1003-00
A7J403	131-1003-00			CONN,RF JACK:PCB,PELTOLA, FEMALE	80009	131-1003-00
A7J472	131-1003-00			CONN,RF JACK:PCB,PELTOLA, FEMALE	80009	131-1003-00
A7J473	131-1003-00			CONN,RF JACK:PCB,PELTOLA, FEMALE	80009	131-1003-00
A7J496	131-1003-00			CONN,RF JACK:PCB,PELTOLA, FEMALE	80009	131-1003-00
A7L236	108-0734-00			COIL,RF:FIXED,163NH	0JR03	108-0734-00
A7L238	108-0734-00			COIL,RF:FIXED,163NH	0JR03	108-0734-00
A7L246	108-0734-00			COIL,RF:FIXED,163NH	0JR03	108-0734-00
A7L248	108-0734-00			COIL,RF:FIXED,163NH	0JR03	108-0734-00
A7L436	108-0734-00			COIL,RF:FIXED,163NH	0JR03	108-0734-00
A7L438	108-0734-00			COIL,RF:FIXED,163NH	0JR03	108-0734-00
A7L446	108-0734-00			COIL,RF:FIXED,163NH	0JR03	108-0734-00
A7L448	108-0734-00			COIL,RF:FIXED,163NH	0JR03	108-0734-00
A7L480	108-0324-00			COIL,RF:FIXED,10MH	76493	B6387
A7Q254	151-0302-00			TRANSISTOR,SIG:BIPOLAR,NPN	04713	2N2222A
A7Q454	151-0302-00			TRANSISTOR,SIG:BIPOLAR,NPN	04713	2N2222A
A7R201	321-0164-00			RES,FXD,FILM:499 OHM,1%,0.125W,TC=T0	91637	CMF55116G499R0F

http://manoman.sqhill.com

Component Number	Tektronix Part No.	Serial No. Effective	Dscont	Name & Description	Mfr. Code	Mfr. Part No.
A7R202	321-0164-00			RES,FXD,FILM:499 OHM,1%,0.125W,TC=T0	91637	CMF55116G499R0F
A7R205	315-0103-00			RES,FXD,FILM:10K OHM,5%,0.25W	TK1727	SFR25 2322-181-
A7R208	321-0164-00			RES,FXD,FILM:499 OHM,1%,0.125W,TC=T0	91637	CMF55116G499R0F
A7R209	321-0164-00			RES,FXD,FILM:499 OHM,1%,0.125W,TC=T0	91637	CMF55116G499R0F
A7R212	325-0053-00			RES,FXD,FILM:50 OHM,1%,0.05W,TC=T0	91637	CMF50-F50R00F
A7R213	325-0053-00			RES,FXD,FILM:50 OHM,1%,0.05W,TC=T0	91637	CMF50-F50R00F
A7R214	325-0053-00			RES,FXD,FILM:50 OHM,1%,0.05W,TC=T0	91637	CMF50-F50R00F
A7R216	325-0053-00			RES,FXD,FILM:50 OHM,1%,0.05W,TC=T0	91637	CMF50-F50R00F
A7R217	325-0053-00			RES,FXD,FILM:50 OHM,1%,0.05W,TC=T0	91637	CMF50-F50R00F
A7R218	325-0053-00			RES,FXD,FILM:50 OHM,1%,0.05W,TC=T0	91637	CMF50-F50R00F
A7R232	321-0202-00			RES,FXD,FILM:1.24K OHM,1%,0.125W,TC=T0MI	91637	CMF55116G12400F
A7R233	322-0111-00			RES,FXD,FILM:140 OHM,1%,0.25W,TC=T0	91637	CMF6042G140R0F
A7R234	322-0170-00			RES,FXD,FILM:576 OHM,1%,0.25W,TC=T0	19701	5043RD576R0F
A7R235	321-0202-00			RES,FXD,FILM:1.24K OHM,1%,0.125W,TC=T0MI	91637	CMF55116G12400F
A7R236	321-0147-00			RES,FXD,FILM:332 OHM,1%,0.125W,TC=T0	91637	CMF55116G332R0F
A7R237	315-0103-00			RES,FXD,FILM:10K OHM,5%,0.25W	TK1727	SFR25 2322-181-
A7R238	321-0155-00			RES,FXD,FILM:402 OHM,1%,0.125W,TC=T0	91637	CMF55116G402R0F
A7R239	321-0085-00			RES,FXD,FILM:75 OHM,1%,0.125W,TC=T0	TK1727	MR25 2322-151-9
A7R240	315-0100-00			RES,FXD,FILM:10 OHM,5%,0.25W,	TK1727	SFR25 2322-182-
A7R241	322-0114-00			RES,FXD,FILM:150 OHM,1%,0.25W,TC=T0	19701	5043RD150R0F
A7R242	321-0202-00			RES,FXD,FILM:1.24K OHM,1%,0.125W,TC=T0MI	91637	CMF55116G12400F
A7R243	322-0111-00			RES,FXD,FILM:140 OHM,1%,0.25W,TC=T0	91637	CMF6042G140R0F
A7R244	322-0170-00			RES,FXD,FILM:576 OHM,1%,0.25W,TC=T0	19701	5043RD576R0F
A7R245	321-0202-00			RES,FXD,FILM:1.24K OHM,1%,0.125W,TC=T0MI	91637	CMF55116G12400F
A7R246	321-0147-00			RES,FXD,FILM:332 OHM,1%,0.125W,TC=T0	91637	CMF55116G332R0F
A7R247	315-0103-00			RES,FXD,FILM:10K OHM,5%,0.25W	TK1727	SFR25 2322-181-
A7R248	321-0155-00			RES,FXD,FILM:402 OHM,1%,0.125W,TC=T0	91637	CMF55116G402R0F
A7R250	317-0200-00			RES,FXD,CMPSN:20 OHM,5%,0.125W	TK1727	SFR16 2322-180-
A7R251	321-0218-00			RES,FXD,FILM:1.82K OHM,1%,0.125W,TC=T0MI	91637	CMF55116G18200F
A7R252	321-0242-00			RES,FXD,FILM:3.24K OHM,1%,0.125W,TC=T0MI	91637	CMF55116G32400F
A7R254	315-0102-00			RES,FXD,FILM:1K OHM,5%,0.25W	TK1727	SFR25 2322-181-
A7R255	311-1236-00			RES,VAR,NONWW:TRMR,250 OHM,0.5W	32997	3386X-1-251
A7R256	321-0062-00			RES,FXD,FILM:43.2 OHM,0.5%,0.125W,TC=T0 MI	TK1727	MR25 2322-151-9
A7R261	321-0178-00			RES,FXD,FILM:698 OHM,1%,0.125W,TC=T0	91637	CMF55116G698R0F
A7R262	315-0510-00			RES,FXD,FILM:51 OHM,5%,0.25W	TK1727	SFR25 2322-181-
A7R263	322-0151-00			RES,FXD,FILM:365 OHM,1%,0.25W,TC=T0	91637	CMF6042G365R0F
A7R264	321-0201-00			RES,FXD,FILM:1.21K OHM,1%,0.125W,TC=T0MI	91637	CMF55116G12100F
A7R265	321-0285-00			RES,FXD,FILM:9.09K OHM,1%,0.125W,TC=T0MI	91637	CMF55116G90900F
A7R270	311-1239-00			RES,VAR,NONWW:TRMR,2.5K OHM,0.5W	32997	3386X-1-252
A7R271	321-0178-00			RES,FXD,FILM:698 OHM,1%,0.125W,TC=T0	91637	CMF55116G698R0F
A7R272	315-0510-00			RES,FXD,FILM:51 OHM,5%,0.25W	TK1727	SFR25 2322-181-
A7R273	322-0239-00			RES,FXD,FILM:3.01K OHM,1%,0.25W,TC=T0MI	19701	5043RD3K010F
A7R274	311-1248-00			RES,VAR,NONWW:TRMR,500 OHM,0.5W	32997	3386X-1-501

http://manoman.sqhill.com

Component Number	Tektronix Part No.	Serial No. Effective	Dscont	Name & Description	Mfr. Code	Mfr. Part No.
A7R277	317-0510-00			RES,FXD,CMPSN:51 OHM,5%,0.125W	TK1727	SFR16 2322-180-
A7R278	322-0085-00			RES,FXD,FILM:75.0 OHM,1%,0.25W,TC=T0	19701	5043RD75R00F
A7R279	311-1936-00			RES,VAR,NONWW:TRMR,50 OHM,20%,0.5W	32997	3386X-1-500
A7R280	317-0510-00			RES,FXD,CMPSN:51 OHM,5%,0.125W	TK1727	SFR16 2322-180-
A7R401	321-0164-00			RES,FXD,FILM:499 OHM,1%,0.125W,TC=T0	91637	CMF55116G499R0F
A7R402	321-0164-00			RES,FXD,FILM:499 OHM,1%,0.125W,TC=T0	91637	CMF55116G499R0F
A7R405	315-0103-00			RES,FXD,FILM:10K OHM,5%,0.25W	TK1727	SFR25 2322-181-
A7R408	321-0164-00			RES,FXD,FILM:499 OHM,1%,0.125W,TC=T0	91637	CMF55116G499R0F
A7R409	321-0164-00			RES,FXD,FILM:499 OHM,1%,0.125W,TC=T0	91637	CMF55116G499R0F
A7R412	325-0053-00			RES,FXD,FILM:50 OHM,1%,0.05W,TC=T0	91637	CMF50-F50R00F
A7R413	325-0053-00			RES,FXD,FILM:50 OHM,1%,0.05W,TC=T0	91637	CMF50-F50R00F
A7R414	325-0053-00			RES,FXD,FILM:50 OHM,1%,0.05W,TC=T0	91637	CMF50-F50R00F
A7R416	325-0053-00			RES,FXD,FILM:50 OHM,1%,0.05W,TC=T0	91637	CMF50-F50R00F
A7R417	325-0053-00			RES,FXD,FILM:50 OHM,1%,0.05W,TC=T0	91637	CMF50-F50R00F
A7R418	325-0053-00			RES,FXD,FILM:50 OHM,1%,0.05W,TC=T0	91637	CMF50-F50R00F
A7R419	321-0143-00			RES,FXD,FILM:301 OHM,1%,0.125W,TC=T0	91637	CMF55116G301R0F
A7R420	321-0126-00			RES,FXD,FILM:200 OHM,1%,0.125W,TC=T0	91637	CMF55116G200ROF
A7R425	321-0143-00			RES,FXD,FILM:301 OHM,1%,0.125W,TC=T0	91637	CMF55116G301R0F
A7R426	321-0126-00			RES,FXD,FILM:200 OHM,1%,0.125W,TC=T0	91637	CMF55116G200ROF
A7R432	321-0202-00			RES,FXD,FILM:1.24K OHM,1%,0.125W,TC=T0MI	91637	CMF55116G12400F
A7R433	322-0111-00			RES,FXD,FILM:140 OHM,1%,0.25W,TC=T0	91637	CMF6042G140R0F
A7R434	322-0170-00			RES,FXD,FILM:576 OHM,1%,0.25W,TC=T0	19701	5043RD576R0F
A7R435	321-0202-00			RES,FXD,FILM:1.24K OHM,1%,0.125W,TC=T0MI	91637	CMF55116G12400F
A7R436	321-0147-00			RES,FXD,FILM:332 OHM,1%,0.125W,TC=T0	91637	CMF55116G332R0F
A7R437	315-0103-00			RES,FXD,FILM:10K OHM,5%,0.25W	TK1727	SFR25 2322-181-
A7R438	321-0155-00			RES,FXD,FILM:402 OHM,1%,0.125W,TC=T0	91637	CMF55116G402R0F
A7R439	322-0114-00			RES,FXD,FILM:150 OHM,1%,0.25W,TC=T0	19701	5043RD150R0F
A7R440	317-0200-00			RES,FXD,CMPSN:20 OHM,5%,0.125W	TK1727	SFR16 2322-180-
A7R441	321-0085-00			RES,FXD,FILM:75 OHM,1%,0.125W,TC=T0	TK1727	MR25 2322-151-9
A7R442	321-0202-00			RES,FXD,FILM:1.24K OHM,1%,0.125W,TC=T0MI	91637	CMF55116G12400F
A7R443	322-0111-00			RES,FXD,FILM:140 OHM,1%,0.25W,TC=T0	91637	CMF6042G140R0F
A7R444	322-0170-00			RES,FXD,FILM:576 OHM,1%,0.25W,TC=T0	19701	5043RD576R0F
A7R445	321-0202-00			RES,FXD,FILM:1.24K OHM,1%,0.125W,TC=T0MI	91637	CMF55116G12400F
A7R446	321-0147-00			RES,FXD,FILM:332 OHM,1%,0.125W,TC=T0	91637	CMF55116G332R0F
A7R447	315-0103-00			RES,FXD,FILM:10K OHM,5%,0.25W	TK1727	SFR25 2322-181-
A7R448	321-0155-00			RES,FXD,FILM:402 OHM,1%,0.125W,TC=T0	91637	CMF55116G402R0F
A7R451	321-0218-00			RES,FXD,FILM:1.82K OHM,1%,0.125W,TC=T0MI	91637	CMF55116G18200F
A7R452	321-0242-00			RES,FXD,FILM:3.24K OHM,1%,0.125W,TC=T0MI	91637	CMF55116G32400F
A7R454	315-0102-00			RES,FXD,FILM:1K OHM,5%,0.25W	TK1727	SFR25 2322-181-
A7R455	311-1236-00			RES,VAR,NONWW:TRMR,250 OHM,0.5W	32997	3386X-1-251
A7R456	321-0062-00			RES,FXD,FILM:43.2 OHM,0.5%,0.125W,TC=T0 MI	TK1727	MR25 2322-151-9
A7R462	322-0151-00			RES,FXD,FILM:365 OHM,1%,0.25W,TC=T0	91637	CMF6042G365R0F
A7R464	321-0201-00			RES,FXD,FILM:1.21K OHM,1%,0.125W,TC=T0MI	91637	CMF55116G12100F

http://manoman.sqhill.com

Component Number	Tektronix Part No.	Serial No. Effective	Dscont	Name & Description	Mfr. Code	Mfr. Part No.
A7R465	321-0285-00			RES,FXD,FILM:9.09K OHM,1%,0.125W,TC=T0MI	91637	CMF55116G90900F
A7R473	322-0239-00			RES,FXD,FILM:3.01K OHM,1%,0.25W,TC=T0MI	19701	5043RD3K010F
A7R474	311-1248-00			RES,VAR,NONWW:TRMR,500 OHM,0.5W	32997	3386X-1-501
A7R476	317-0510-00			RES,FXD,CMPSN:51 OHM,5%,0.125W	TK1727	SFR16 2322-180-
A7R477	317-0510-00			RES,FXD,CMPSN:51 OHM,5%,0.125W	TK1727	SFR16 2322-180-
A7R478	322-0085-00			RES,FXD,FILM:75.0 OHM,1%,0.25W,TC=T0	19701	5043RD75R00F
A7R479	311-1936-00			RES,VAR,NONWW:TRMR,50 OHM,20%,0.5W	32997	3386X-1-500
A7R480	311-1237-00			RES,VAR,NONWW:1K OHM,10%,0.50W	32997	3386X-DY6-102
A7R481	321-0179-00			RES,FXD,FILM:715 OHM,1%,0.125W,TC=T0	91637	CMF55116G715R0F
A7R482	321-0182-00			RES,FXD,FILM:768 OHM,1%,0.125W,TC=T0	91637	CMF55116G768R0F
A7R483	317-0200-00			RES,FXD,CMPSN:20 OHM,5%,0.125W	TK1727	SFR16 2322-180-
A7R484	315-0510-00			RES,FXD,FILM:51 OHM,5%,0.25W	TK1727	SFR25 2322-181-
A7R485	311-1936-00			RES,VAR,NONWW:TRMR,50 OHM,20%,0.5W	32997	3386X-1-500
A7R486	325-0026-00			RES,FXD,FILM:180 OHM,1%,0.05W,TC=T9,MET	64537	PME50 180 OHM 1
A7R490	311-1237-00			RES,VAR,NONWW:1K OHM,10%,0.50W	32997	3386X-DY6-102
A7R491	321-0179-00			RES,FXD,FILM:715 OHM,1%,0.125W,TC=T0	91637	CMF55116G715R0F
A7R492	321-0182-00			RES,FXD,FILM:768 OHM,1%,0.125W,TC=T0	91637	CMF55116G768R0F
A7R493	317-0200-00			RES,FXD,CMPSN:20 OHM,5%,0.125W	TK1727	SFR16 2322-180-
A7R494	315-0510-00			RES,FXD,FILM:51 OHM,5%,0.25W	TK1727	SFR25 2322-181-
A7R495	322-0145-00			RES,FXD,FILM:316 OHM,1%,0.25W,TC=T0	19701	5043RD316R0F
A7R496	325-0026-00			RES,FXD,FILM:180 OHM,1%,0.05W,TC=T9,MET	64537	PME50 180 OHM 1
A7R497	322-0175-00			RES,FXD,FILM:649 OHM,1%,0.25W,TC=T0	19701	5043RD649R0F
A7R498	321-0143-00			RES,FXD,FILM:301 OHM,1%,0.125W,TC=T0	91637	CMF55116G301R0F
A7R499	315-0510-00			RES,FXD,FILM:51 OHM,5%,0.25W	TK1727	SFR25 2322-181-
A7U232	155-0173-00			MICROCKT,LINEAR:VERTICAL CHANNEL SWITCH	80009	155-0173-00
A7U252	156-0158-00			IC,LINEAR:BIPOLAR,OP-AMP;DUAL	04713	MC1458P1
A7U274	155-0175-00			MICROCKT,LINEAR:TRIGGER AMPLIFIER	80009	155-0175-00
A7U402	156-0730-02			IC,DIGITAL:LSTTL,GATES	01295	SN74LS33N
A7U432	155-0173-00			MICROCKT,LINEAR:VERTICAL CHANNEL SWITCH	80009	155017300
A7U452	156-0158-00			IC,LINEAR:BIPOLAR,OP-AMP;DUAL	04713	MC1458P1
A7U474	155-0175-00			MICROCKT,LINEAR:TRIGGER AMPLIFIER	80009	155-0175-00
A7U492	155-0175-00			MICROCKT,LINEAR:TRIGGER AMPLIFIER	80009	155-0175-00
A7VR237	153-0067-00			SEMICOND DVC SE:ZENER,PAIR	80009	153-0067-00
A7VR247	153-0067-00			SEMICOND DVC SE:ZENER,PAIR	80009	153-0067-00
A7VR437	153-0067-00			SEMICOND DVC SE:ZENER,PAIR	80009	153-0067-00
A7VR447	153-0067-00			SEMICOND DVC SE:ZENER,PAIR	80009	153-0067-00

http://manoman.sqhill.com

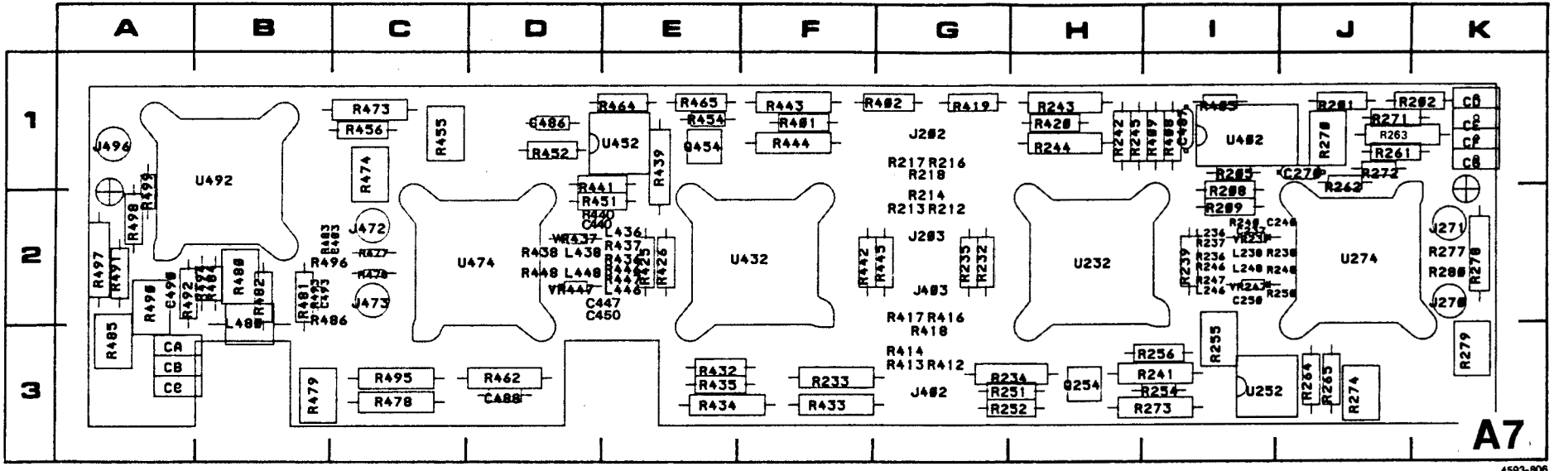

Figure 8 A7 –Trigger Selector circuit board assembly.

http://manoman.sqhill.com

B021375 and ABOVE

TRIGGER SELECTOR DIAGRAM 5

ASSEMBLY A7

CIRCUIT NUMBER	SCHEM LOCATION	BOARD LOCATION
C237	A3	I2
C240	A3	J2
C250	C3	I2
C270	B3	J1
C440	E3	E2
C447	D3	D3
C450	D3	D3
C483	F1	C2
C486	F5	D1
C487	F5	I1
C488	F5	D3
C490	G2	A2
C493	G2	B2
J202	C5	G1
J203	C5	G2
J270	C1	K2
J271	A1	K2
J402	D5	G3
J403	D5	G2
J472	D1	C2
J473	E1	C2
J496	G1	A1
L236	B3	I2
L238	B3	I2
L246	B3	I2
L248	B3	I2
L436	D3	E2
L438	D3	D2
L446	E3	E2
L448	E3	D2
L480	G3	B2
Q254	B4	H3
Q454	E4	E1
R201	B5	J1
R202	B5	K1
R205	B5	I1
R208	B5	I2
R209	B5	I2
R212	C5	G2
R213	C5	G2
R214	C5	G2
R216	C5	G1
R217	C5	G1
R218	C5	G1
R232	A4	G2
R233	A4	R3
R234	A4	G3
R235	A4	G2
R236	B3	I2
R237	B3	I2
R238	B3	J2
R239	B3	I2
R240	A3	I2
R241	B3	I3
R242	C4	H1
R243	C4	H1
R244	C4	H1
R245	C4	H1
R246	B3	I2
R247	B3	I2
R248	B3	J2
R250	C3	J2
R251	B3	G3
R252	B3	G3
R254	B3	I3
R255	B3	I3
R256	B3	I3
R261	B3	J1
R262	B3	J2
R263	B3	J1
R264	C2	J3
R265	C2	J3
R270	B3	J1
R271	B3	J1
R272	B3	J1
R273	A2	I3
R274	A2	J3
R277	B2	K2
R278	B2	K2
R279	B1	K3
R280	B2	K2
R401	D5	R1
R402	E5	G1
R405	E5	I1
R408	E5	I1
R409	E5	I1
R412	D4	G3
R413	D4	G3
R414	D4	G3
R416	D4	G2
R417	D4	G2
R418	D4	G3
R419	D4	G1
R420	D4	H1
R425	E4	E2
R426	E4	E2
R432	D4	E3
R433	D4	R3
R434	D4	E3
R435	D4	E3
R436	D3	E2
R437	D3	E2
R438	D3	D2
R439	D3	E1
R440	E3	E2
R441	D3	D2
R442	E4	R2
R443	R4	R1
R444	E4	R1
R445	E4	G2
R446	E3	E2
R447	E3	E2
R448	E3	D2
R451	E3	D2
R452	E3	D1
R454	E3	E1
R455	E3	C1
R456	E3	C1
R462	E3	D3
R464	F1	E1
R465	F1	E1
R473	D2	C1
R474	D2	C1
R476	E2	C2
R477	D2	C2
R478	D1	C3
R479	D1	B3
R480	F3	B2
R481	F1	B2
R482	F1	B2
R483	F1	B2
R484	F1	B2
R485	G2	A3
R486	G3	B2
R490	G2	A2
R491	G2	A2
R492	G2	A2
R493	G2	B2
R494	G2	B2
R495	G2	C3
R496	G3	B2
R497	G1	A2
R498	G1	A2
R499	F1	A2
U232	A4	H2
U252A	B3	I3
U252B	C2	I3
U274	A2	J2
U402A	B5	I1
U402B	B5	I1
U402C	E5	I1
U402D	E5	I1
U432	D4	R2
U452A	E3	E1
U452B	F1	E1
U474	D2	C2
U492	F1	B1
VR237	B3	I2
VR247	B3	I2
VR437	D3	D2
VR447	E3	D2

CHASSIS MOUNTED PARTS

CIRCUIT NUMBER	SCHEM LOCATION	BOARD LOCATION
J497	G1	CHASSIS

http://manoman.sqhill.com

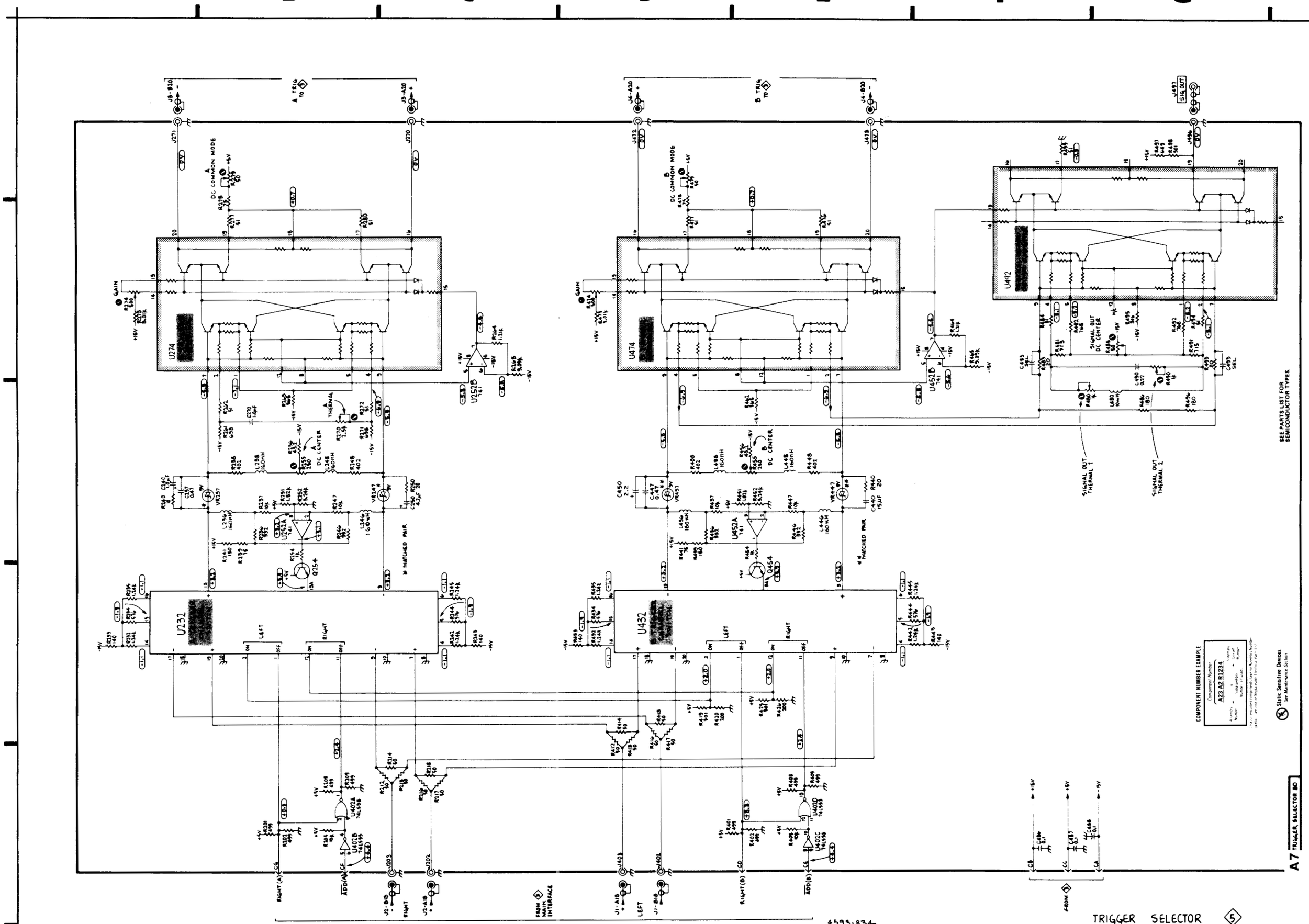

B021375 and ABOVE

http://manoman.sqhill.com